Sonne-8 Microcontroller Reference Schematics Rev. Myth

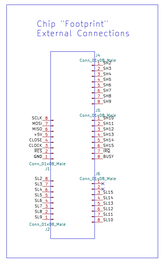

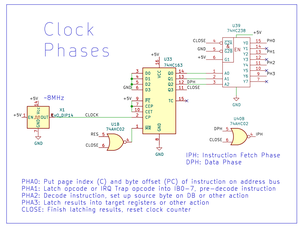

D(OWN COUNTER) Inner-loops

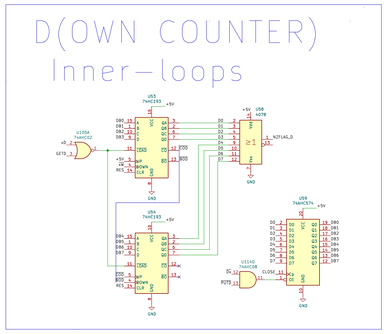

AX (Accumulator)

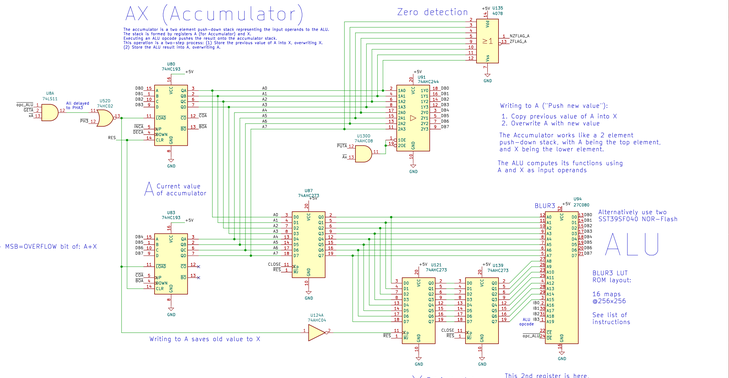

ALU Instructions

(Results are pushed)

0 DUP ("Copy of A")	A := A
1 SWAP ("Copy of X")	A := X
2 NOTA ("One's Complement of A")	A := ~A
3 NOTX ("One's Complement of X")	A := ~X
4 SLA ("Shift left A")	A := A<<1
5 SLX ("Shift left X")	A := X<<1
6 SRA ("Shift right A")	A := A>>1
7 SRX ("Shift right X")	A := X >> 1
8 AND ("A boolean-and X")	A := A & X
9 IOR ("A inclusive-or X")	A := A | X
10 EOR ("A exclusive-or X")	A := A ^ X
11 ADD ("Add X to A)	A := A + X, bits 0-7
12 OVF ("Carry/Overflow of: A plus X")	A := Zero + LSB=CARRY + MSB=OVERFLOW bit of: A+X
13 ALX ("A less than X")	A := (A<X)? 0xFF:0
14 AEX ("A equal to X")	A := (A==X)? 0xFF:0
15 AGX ("A greater than X")	A := (A>X)? 0xFF:0

Instruction Decoder

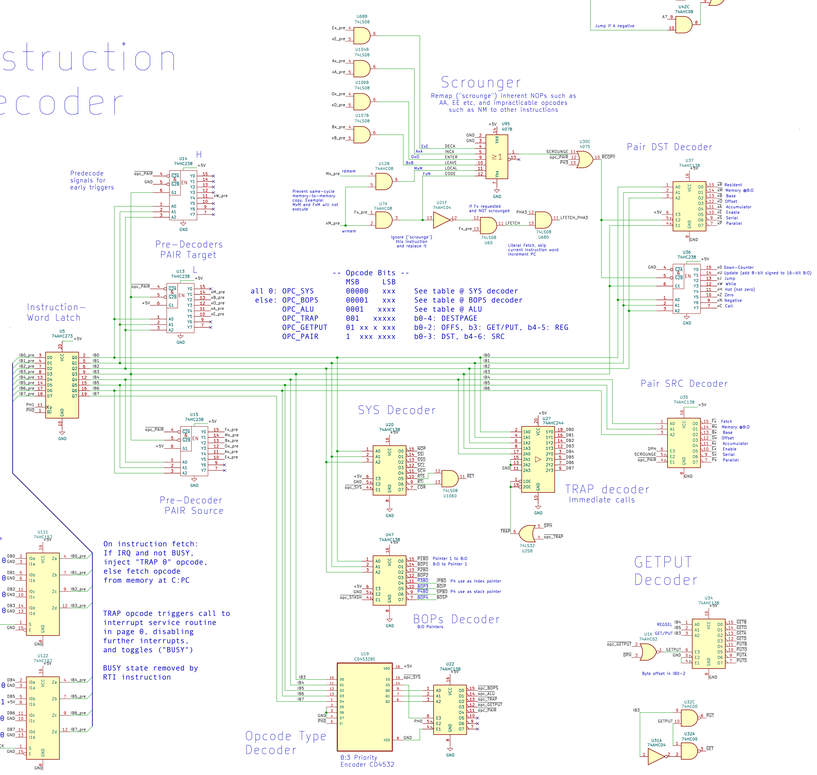

B:0 Pointer low

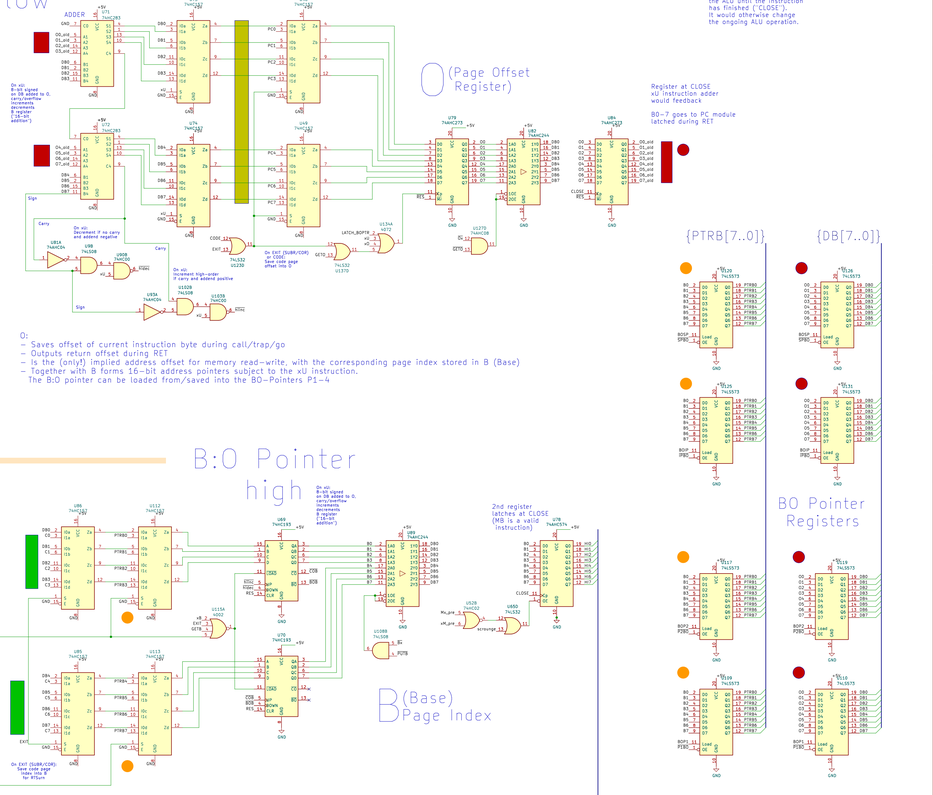

B:0 Pointer high

(PC Program Counter)

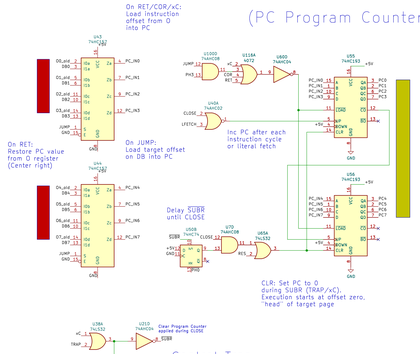

Control Tree

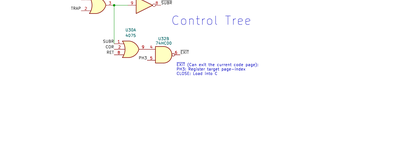

Input/Output

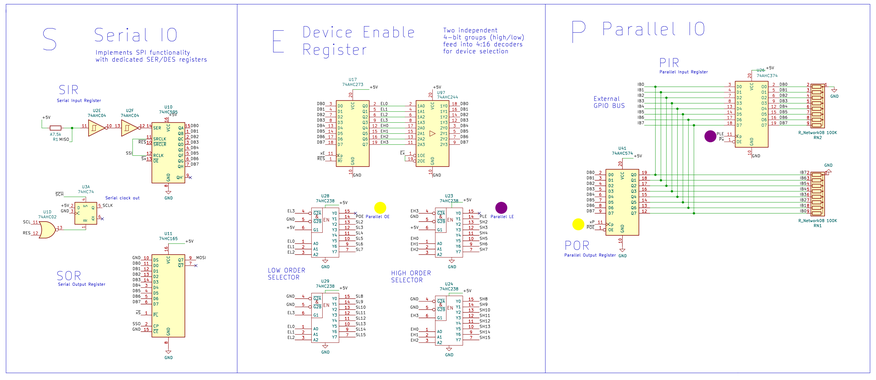

(Local Page Index Register)

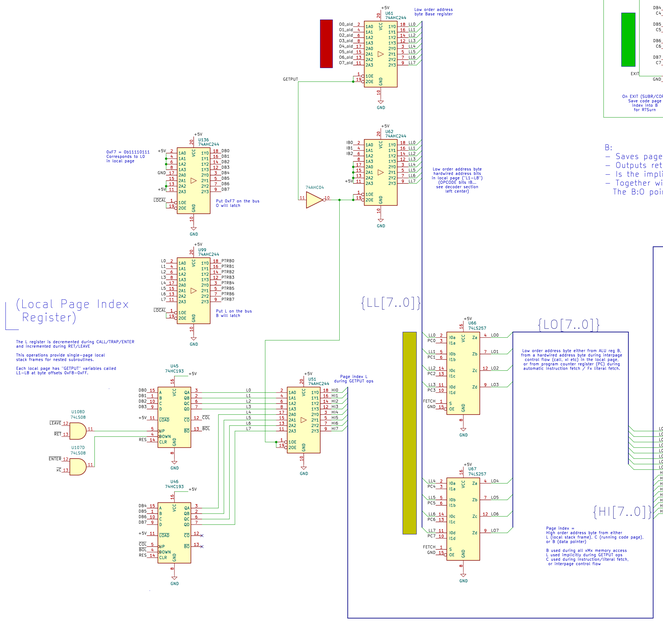

Based on working prototype PCB: https://github.com/michaelmangelsdorf/sonne8
Rev. Step "Zero"
Project homepage: https://github.com/michaelmangelsdorf/myth
Author: Michael Mangelsdorf
Contact: mim@osk-schaller.de
Sheet: /
File: myth.kicad_sch

Title: Sonne-8 Micro-Controller

Size: A0	Date: 2025-06-05	Rev: Myth
KiCad 8.0.4, 9.0.1		Id: 1/1