# Sonne-8 Microcontroller Reference Schematics Rev. Myth

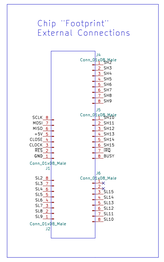


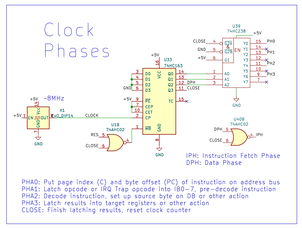


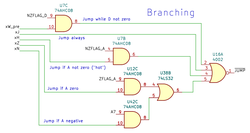


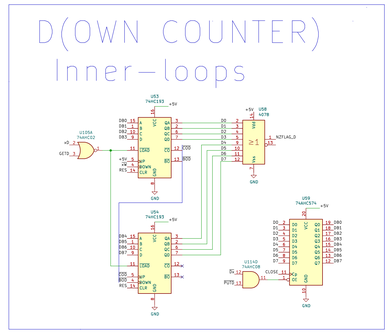


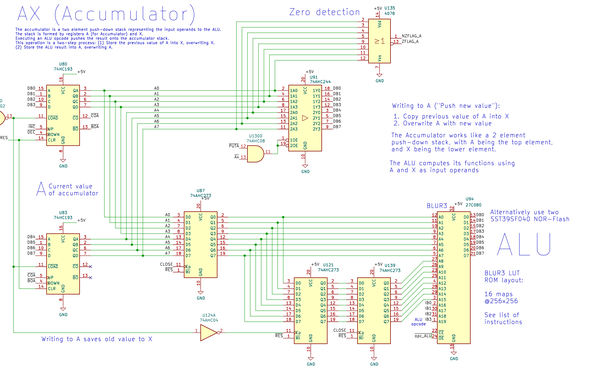


# Instruction Decoder

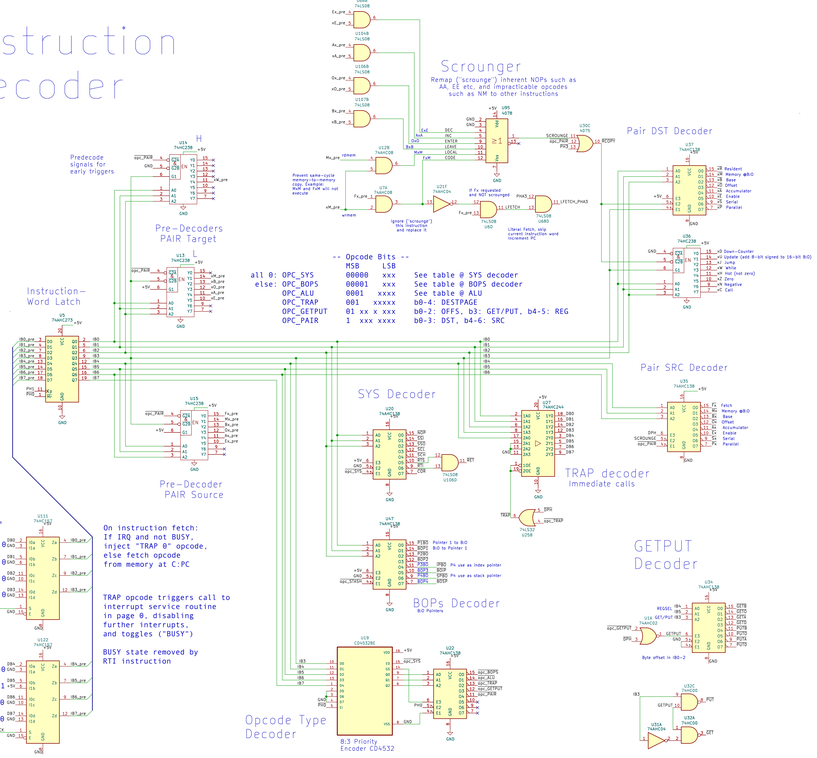


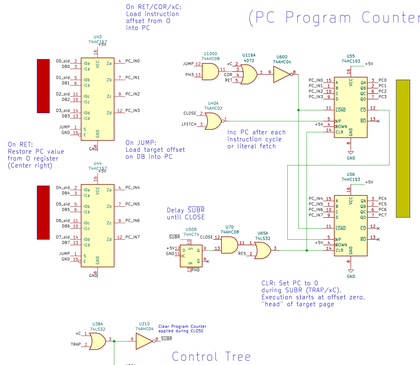


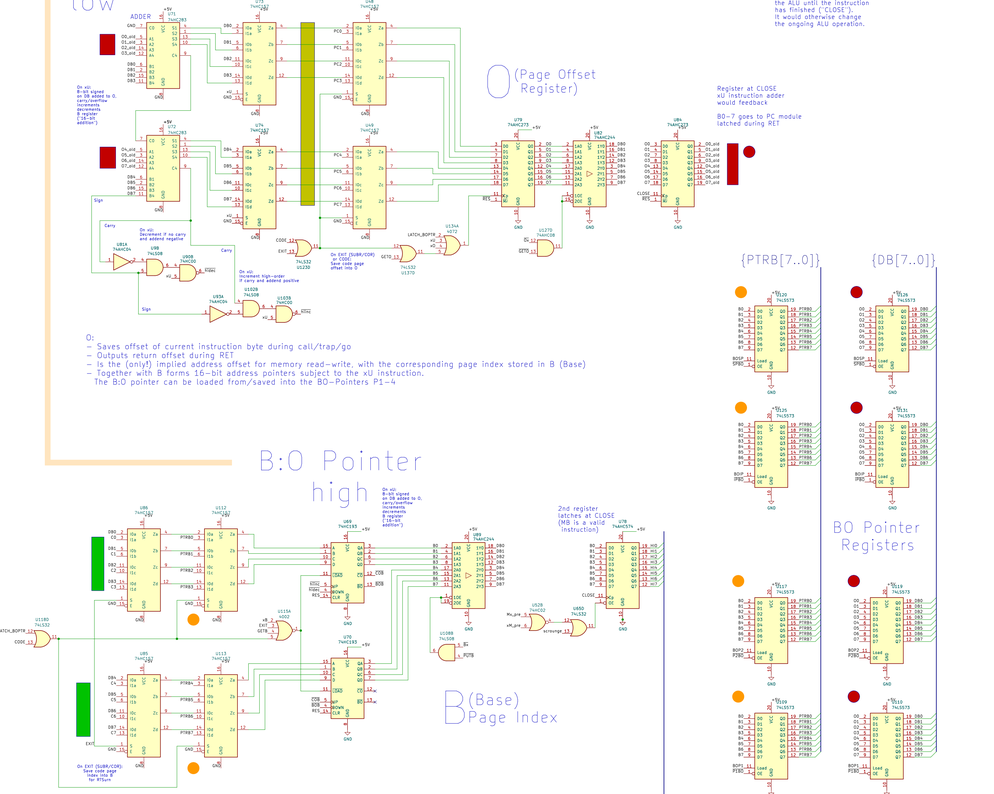


# Input/Output

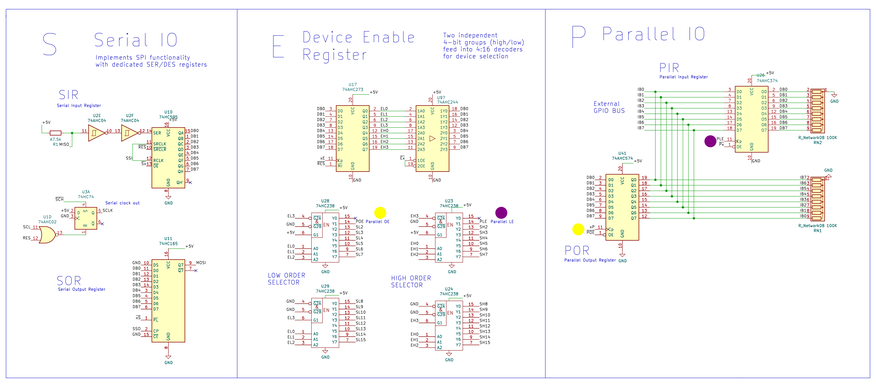


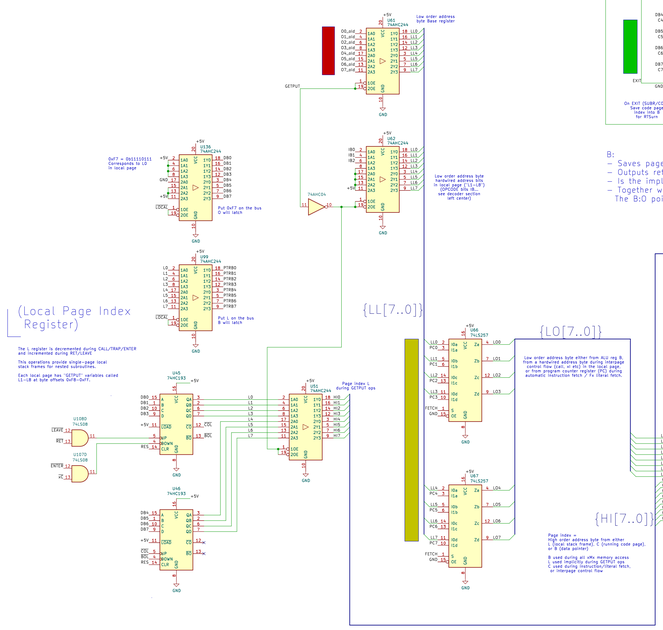


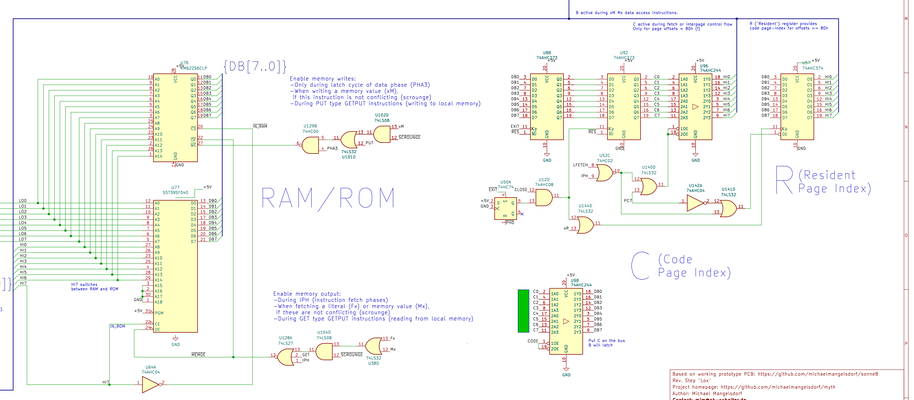



Based on working prototype PCB: https://github.com/michaelmangelsdorf/sonne8
Rev. Step: 1ov
Project homepage: https://github.com/michaelmangelsdorf/myth
Author: Michael Mangelsdorf
Contact: mim@ok-schalter.de
Sheet: /
File: myth.kicad_sch
Title: Sonne-8 Micro-Controller
Size: A0 Date: 2025-06-05 Rev: Myth
KiCad 8.0.4 9.0.1 Id: 1/1