Sonne-8 Microcontroller Reference Schematics Rev. Myth

Clock Phases

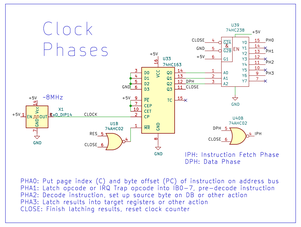

Chip "Footprint" External Connections

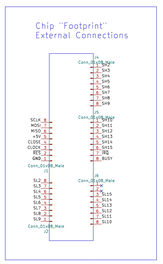

D(OWN COUNTER) Inner-loops

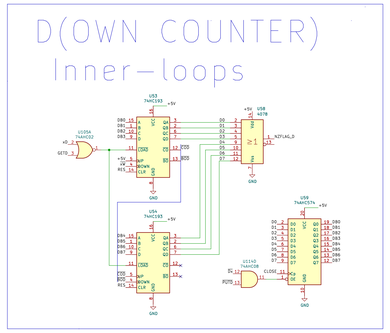

Branching

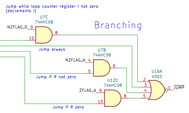

A (Accumulator)

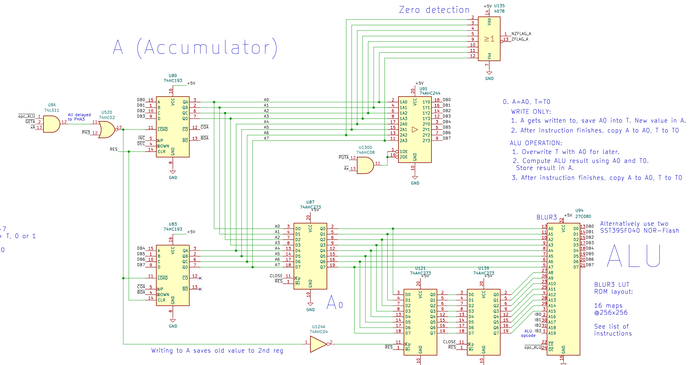

ALU Instructions

0	CDA ("Copy A")	A := A
1	CDT ("Copy T")	A := T
2	OCA ("One's Complement T")	A := -A
3	OCT ("One's Complement T")	A := ~T
4	SLA ("A shifted left")	A := A << 1
5	SLT ("T shifted left")	A := T << 1
6	SRA ("A shifted right")	A := A >> 1
7	SRT ("T shifted right")	A := T >> 1
8	AND ("A boolean-and T")	A := A & T
9	IOR ("A inclusive-or T")	A := A | T
10	EOR ("A exclusive-or T")	A := A ^ T
11	ADD ("Add T to A)	A := A + T, bits 0-7
12	CAR ("Carry bit of: A plus T")	A := 9th bit of: A + T, 0 or 1
13	ALT ("Is A less than T")	A := (A<T)? 0xFF:0
14	AET ("Is A equal to T")	A := (A==T)? 0xFF:0
15	AGT ("Is A greater than T")	A := (A>T)? 0xFF:0

0, A=A0, T=T0

WRITE ONLY:
1. A gets written to, save A0 into T. New value in A.
2. After instruction finishes, copy A to A0, T to T0

ALU OPERATION:
1. Overwrite T with A0 for later.
2. Compute ALU result using A0 and T0. Store result in A.
3. After instruction finishes, copy A to A0, T to T0

Instruction Decoder

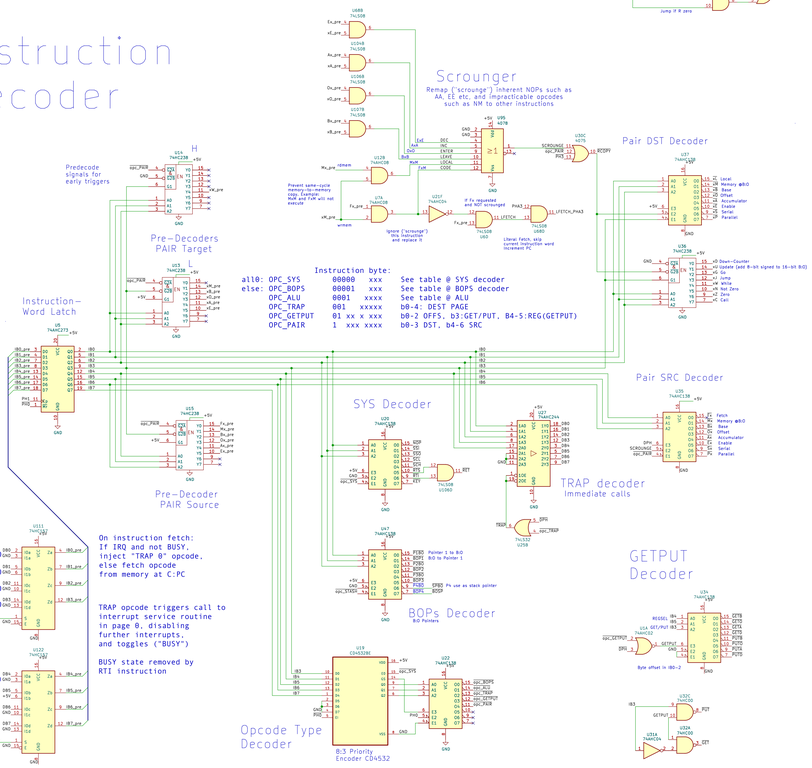

Instruction byte:

all0:	OPC_SYS	00000 xxx	See table @ SYS decoder
else:	OPC_BOPS	00001 xxx	See table @ BOPS decoder
	OPC_ALU	0001 xxxx	See table @ ALU
	OPC_TRAP	001 xxxxx	b0-4: DEST PAGE
	OPC_GETPUT	01 xx x xxx	b0-2 OFFS, b3:GET/PUT, B4-5:REG(GETPUT)
	OPC_PAIR	1 xxx xxxx	b0-3 DST, b4-6 SRC

(PC Program Counter)

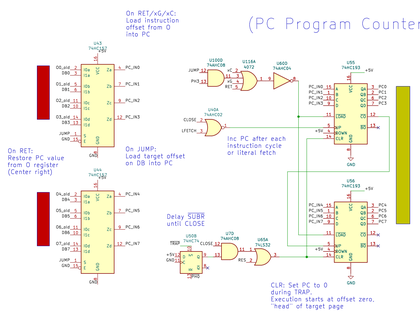

Control Tree

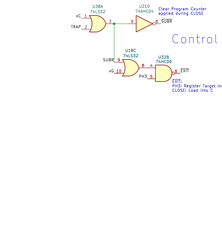

GETPUT Decoder

B:O Pointer low

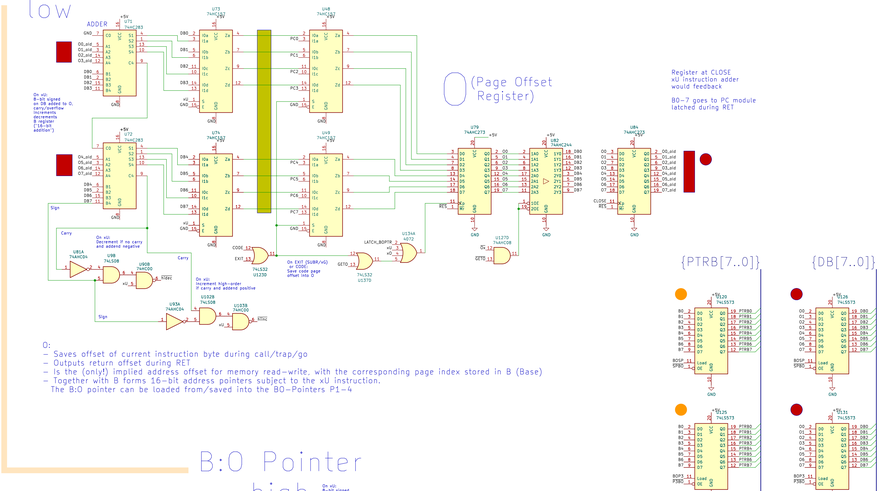

O:
- Saves offset of current instruction byte during call/trap/go
- Outputs return offset during RET
- Is the (only!) implied address offset for memory read-write, with the corresponding page index stored in B (Base)
- Together with B forms 16-bit address pointers subject to the xU instruction
The B:O pointer can be loaded from/saved into the BO-Pointers P1-4

B:O Pointer high

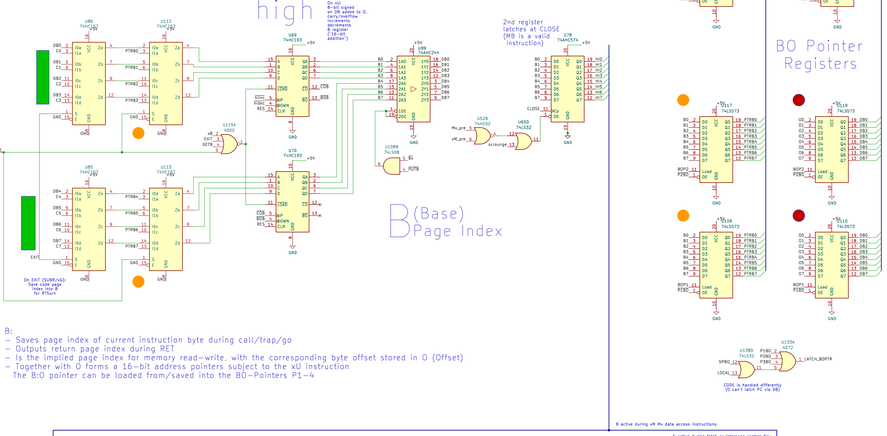

B:
- Saves page index of current instruction byte during call/trap/go
- Outputs return page index during RET
- Is the implied page index for memory read-write, with the corresponding byte offset stored in O (Offset)
- Together with O forms a 16-bit address pointers subject to the xU instruction
The B:O pointer can be loaded from/saved into the BO-Pointers P1-4

Input/Output

S Serial IO

Implements SPI functionality with dedicated SER/DES registers

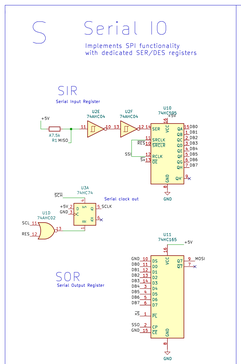

E Device Enable Register

Two independent 4-bit groups (high/low) feed into 4:16 decoders for device selection

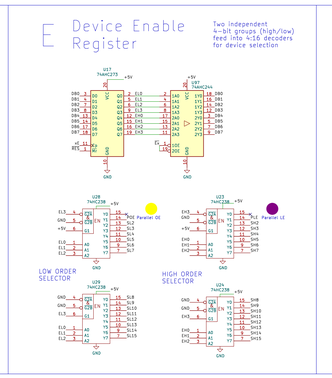

P Parallel IO

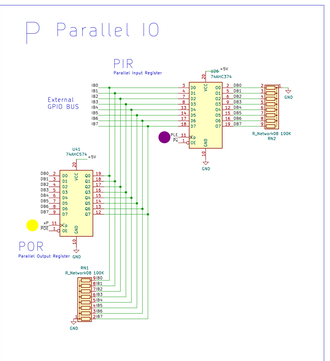

(Local Page Index Register)

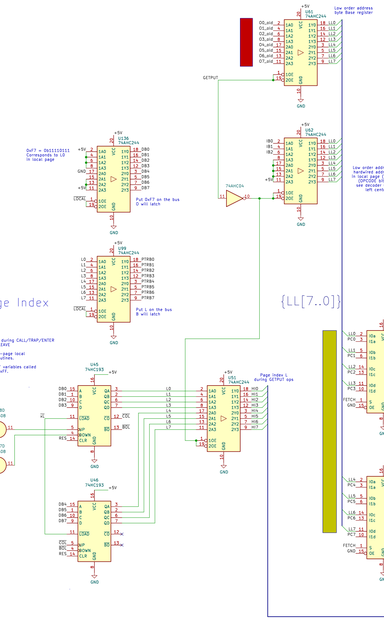

RAM/ROM

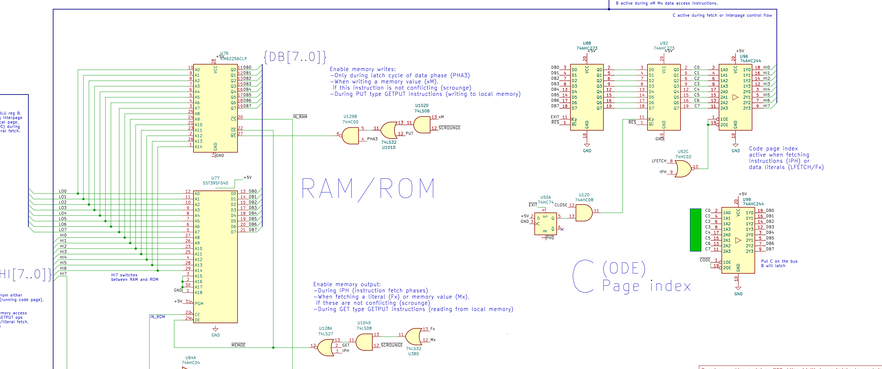

Based on working prototype PCB: https://github.com/michaelmangelsdorf/sonne8
Rev. Step 'Lux'
Rev. Myth schematic: https://github.com/michaelmangelsdorf/myth
Author: Michael Mangelsdorf
Contact: mimgsk-schalter.de
Sheet: /
File: myth.kicad_sch
Title: Sonne-8 Micro-Controller
Size: A0 Date: 2025-06-05 Rev: Myth
KiCad 8.0.4, 9.0.1 Id: 1/1