Sonne-8 Microcontroller Reference Schematics Rev. Myth

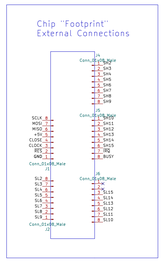

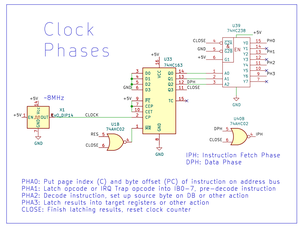

Instruction Decoder

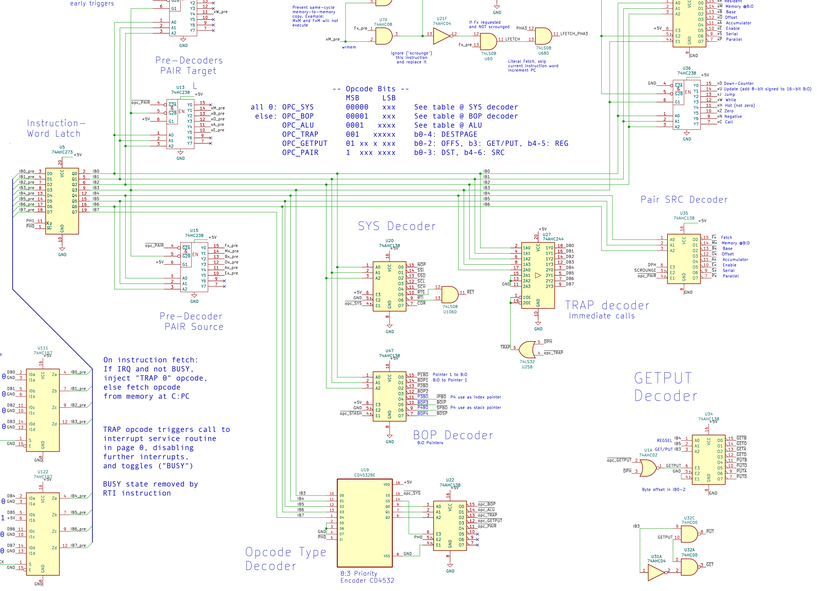

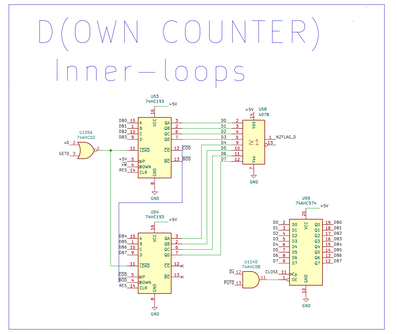

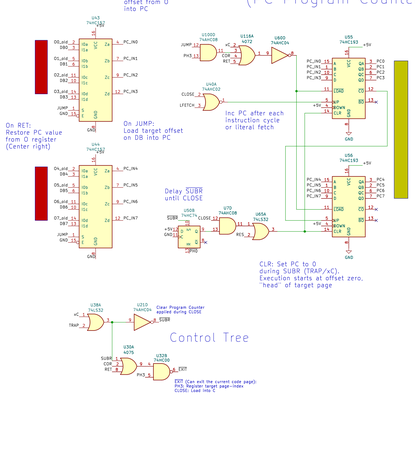

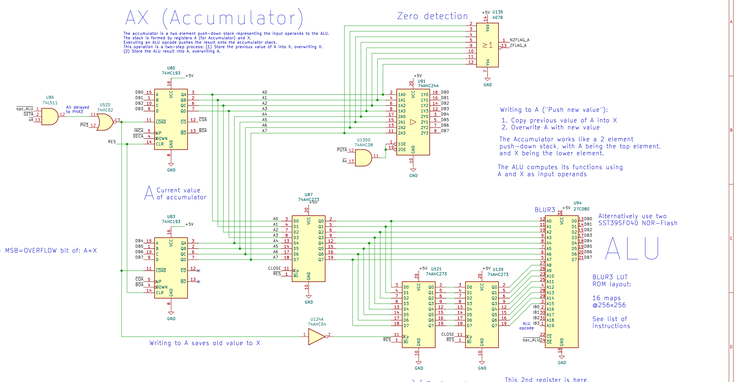

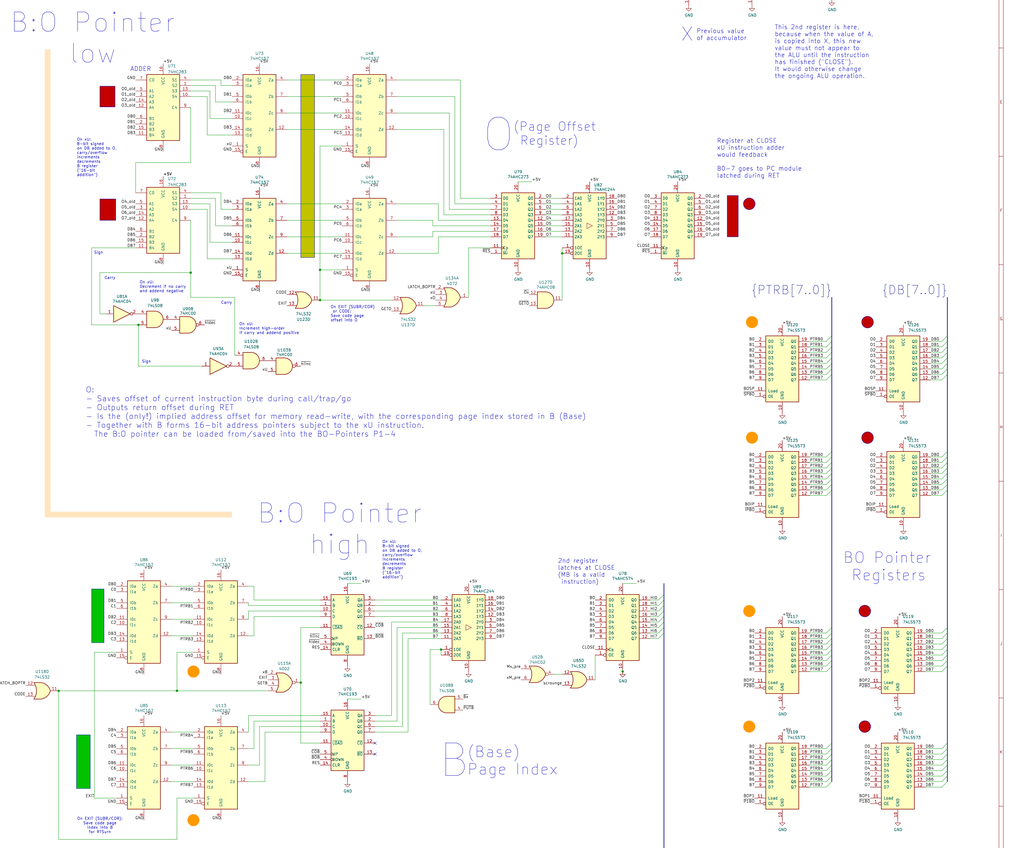

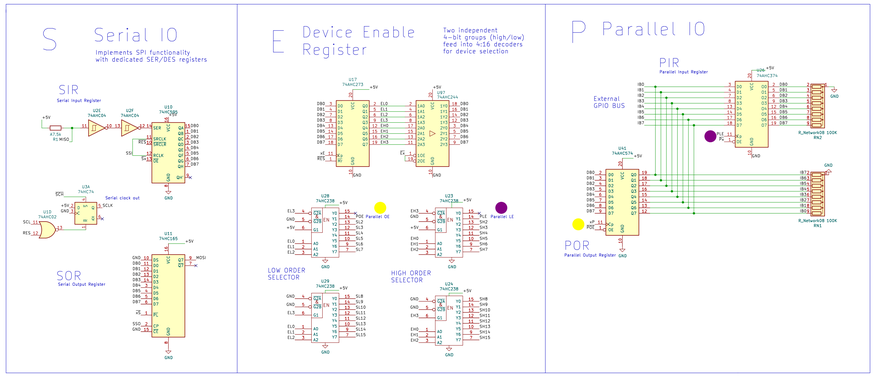

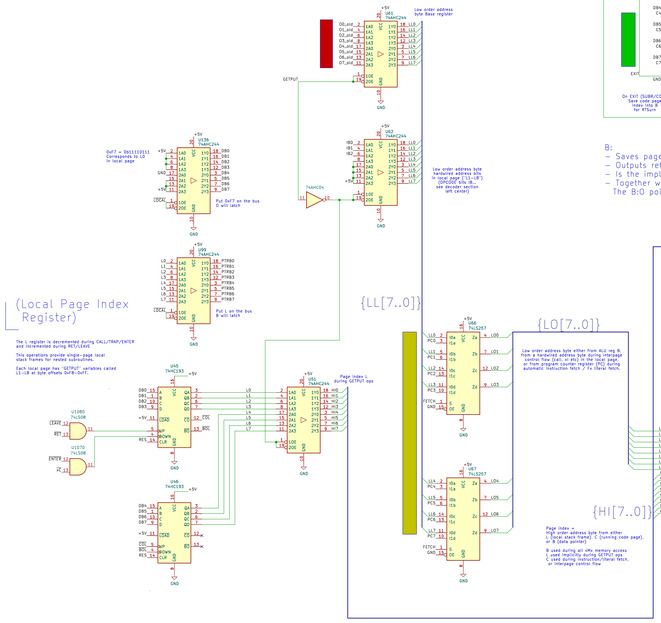

Based on working prototype PCB: https://github.com/michaelmangelsdorf/sonne8
Rev. Step "Zero"
Project homepage: https://github.com/michaelmangelsdorf/myth
Author: Michael Mangelsdorf
Contact: mim@ok-schaller.de
Sheet: /
File: myth.kicad_sch

Title: Sonne-8 Micro-Controller

Size: A0	Date: 2025-06-05	**Rev: Myth**
KiCad 8.0.4, 9.0.1		Id: 1/1