build AI rover

Created March 1, 2026 8:16 AM

Tags Empty

the overall architecture:

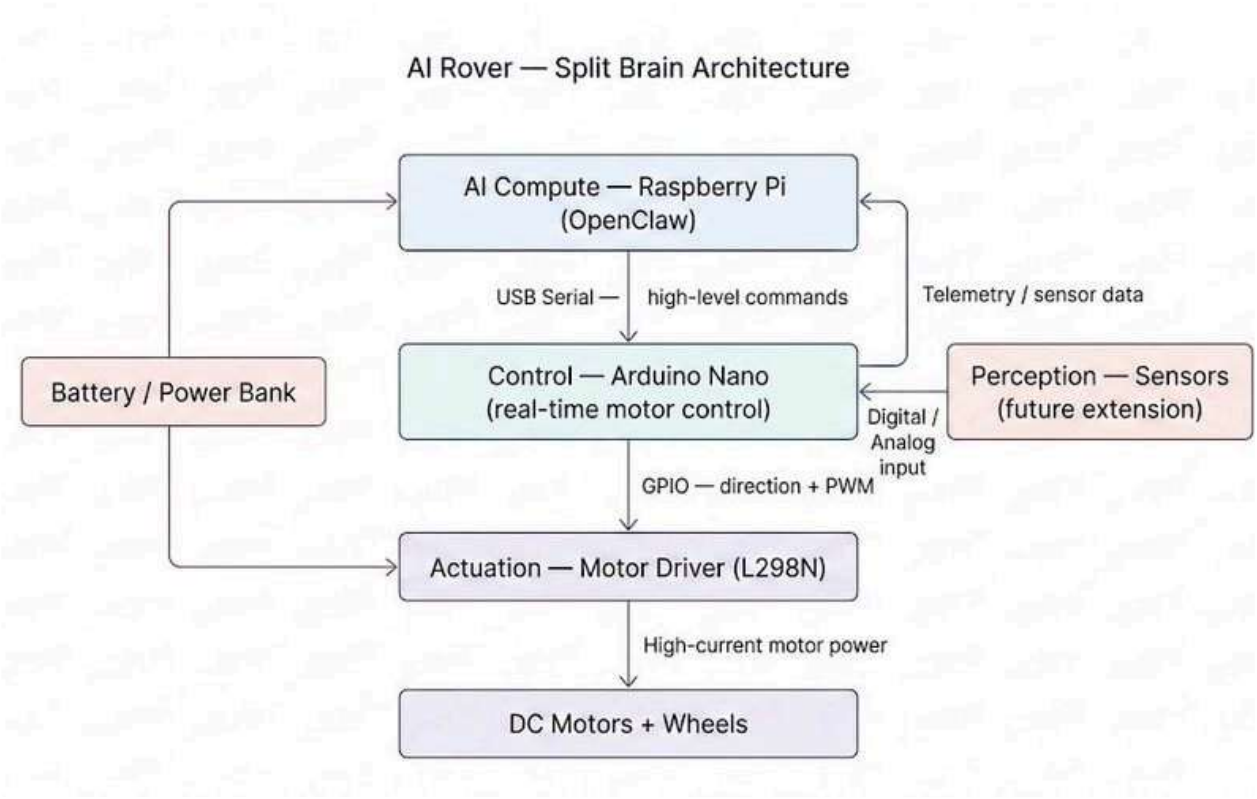

the initial code loaded on Nano for integration testing.

```
// TB6612FNG minimal test (no motors yet). LEDs optional. // Pin mapping (matches the diagram you posted): const int PWMA = 6; const int AIN2 = 7; const int AIN1 = 8; const int BIN1 = 9; const int BIN2 = 10; const int PWMB = 11; const int STBY = 12; void setup() { pinMode(PWMA, OUTPUT); pinMode(AIN1, OUTPUT); pinMode(AIN2, OUTPUT); pinMode(PWMB, OUTPUT); pinMode(BIN1, OUTPUT); pinMode(BIN2, OUTPUT); pinMode(STBY, OUTPUT); digitalWrite(STBY, HIGH); // enable driver analogWrite(PWMA, 0); analogWrite(PWMB, 0); } void loop() { // forward digitalWrite(AIN1, HIGH); digitalWrite(AIN2, LOW); digitalWrite(BIN1, HIGH); digitalWrite(BIN2, LOW); analogWrite(PWMA, 180); analogWrite(PWMB, 180); delay(1500); // stop analogWrite(PWMA, 0); analogWrite(PWMB, 0); delay(500); // reverse digitalWrite(AIN1, LOW); digitalWrite(AIN2, HIGH); digitalWrite(BIN1, LOW); digitalWrite(BIN2, HIGH); analogWrite(PWMA, 180); analogWrite(PWMB, 180); delay(1500); // stop analogWrite(PWMA, 0); analogWrite(PWMB, 0); delay(1000); }
```

core parts:

1. 2WD Robot Car Chassis Kit with TT Motor
2. **Raspberry Pi Zero 2 W (Wireless / Bluetooth) 2021 (RPi Zero 2W)**
3. **Arduino Nano - Compact ATmega328P Microcontroller**
4. **WWZMDiB TB6612FNG Dual Motor Driver Controller Board Module**