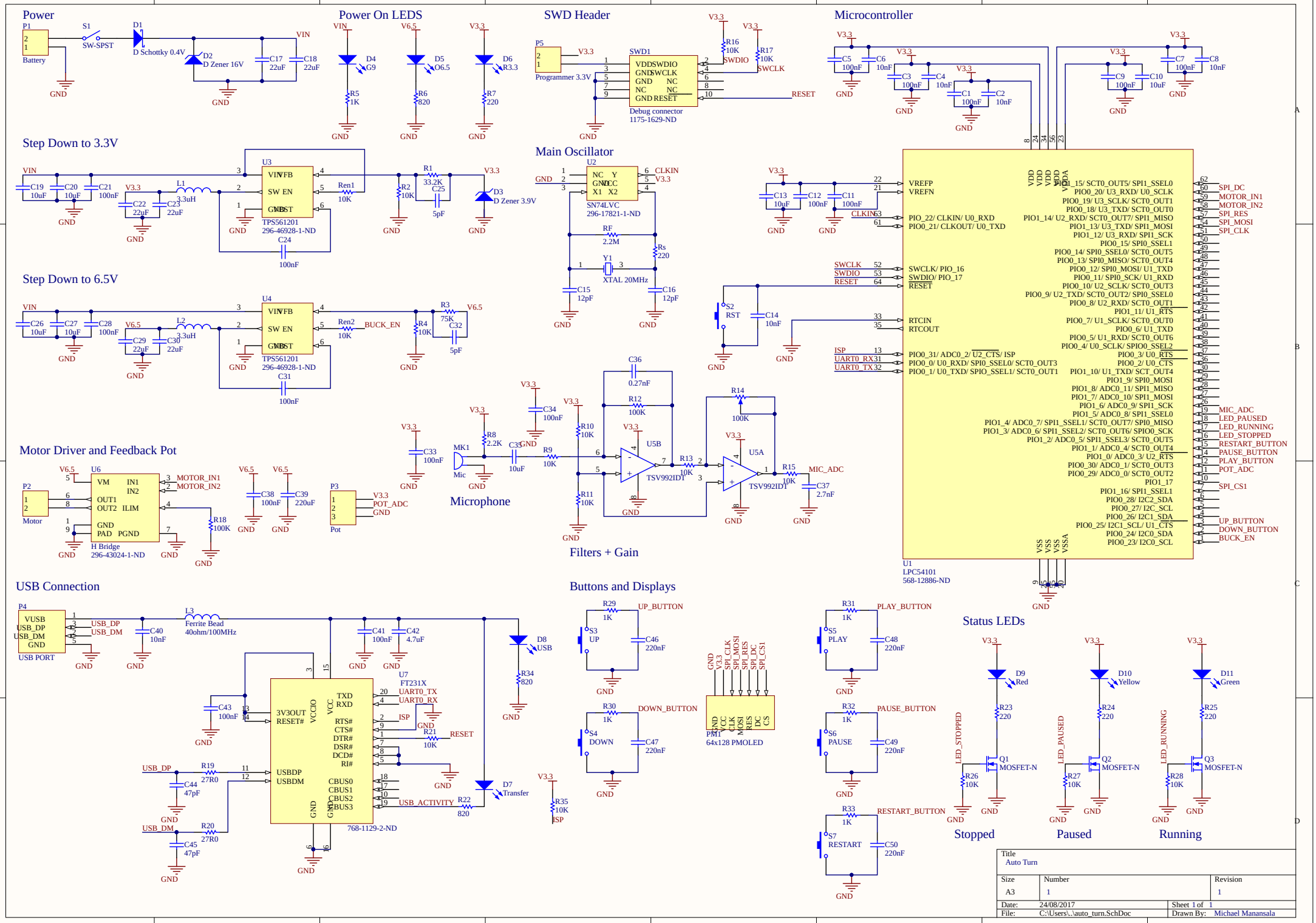
Power
P1
Battery
S1
SW-SPST
D1
D Schottky 0.4V
D2
D Zener 16V
C17
22uF
C18
22uF
VIN
GND
Power On LEDS
D4
G9
D5
O6.5
D6
R3.3
R5
1K
R6
820
R7
220
SWD Header
P5
Programmer 3.3V
SWD1
VDD SWDIO
GND SWCLK
GND NC
NC NC
GND RESET
Debug connector
1175-1629-ND
R16
10K
SWDIO
R17
10K
SWCLK
RESET
V3.3
Microcontroller
C5
100nF
C6
10nF
C3
100nF
C4
10nF
C1
100nF
C2
10nF
C7
100nF
C8
10nF
C9
100nF
C10
10uF
Step Down to 3.3V
U3
VIN FB
SW EN
GND BST
TPS561201
296-46928-1-ND
C19
10uF
C20
10uF
C21
100nF
L1
3.3uH
C22
22uF
C23
22uF
C24
100nF
Ren1
10K
R1
33.2K
C25
5pF
R2
10K
D3
D Zener 3.9V
Main Oscillator
U2
NC Y
GND VCC
X1 X2
SN74LVC
296-17821-1-ND
CLKIN
RF
2.2M
Rs
220
Y1
XTAL 20MHz
C15
12pF
C16
12pF
Step Down to 6.5V
U4
VIN FB
SW EN
GND BST
TPS561201
296-46928-1-ND
C26
10uF
C27
10uF
C28
100nF
L2
3.3uH
C29
22uF
C30
22uF
C31
100nF
Ren2
10K
BUCK_EN
R3
75K
C32
5pF
R4
10K
V6.5
Motor Driver and Feedback Pot
U6
VM IN1
IN2
OUT1
OUT2 ILIM
GND
PAD PGND
H Bridge
296-43024-1-ND
P2
Motor
MOTOR_IN1
MOTOR_IN2
R18
100K
C38
100nF
C39
220uF
P3
Pot
POT_ADC
Microphone
MK1
Mic
R8
2.2K
C35
10uF
C34
100nF
C33
100nF
R9
10K
R10
10K
R11
10K
C36
0.27nF
R12
100K
U5B
TSV992ID1
R13
10K
R14
100K
U5A
TSV992ID1
R15
10K
MIC_ADC
C37
2.7nF
Filters + Gain
U1
LPC54101
568-12886-ND
VREFP
VREFN
PIO_22/ CLKIN/ U0_RXD
PIO0_21/ CLKOUT/ U0_TXD
SWCLK/ PIO_16
SWDIO/ PIO_17
RESET
RTCIN
RTCOUT
PIO0_31/ ADC0_2/ U2_CTS/ ISP
PIO0_0/ U0_RXD/ SPI0_SSEL0/ SCT0_OUT3
PIO0_1/ U0_TXD/ SPIO_SSEL1/ SCT0_OUT1
PIO1_15/ SCT0_OUT5/ SPI1_SSEL0
PIO0_20/ U3_RXD/ U0_SCLK
PIO0_19/ U3_SCLK/ SCT0_OUT1
PIO0_18/ U3_TXD/ SCT0_OUT0
PIO1_14/ U2_RXD/ SCT0_OUT7/ SPI1_MISO
PIO1_13/ U3_TXD/ SPI1_MOSI
PIO1_12/ U3_RXD/ SPI1_SCK
PIO0_15/ SPI0_SSEL1
PIO0_14/ SPI0_SSEL0/ SCT0_OUT5
PIO0_13/ SPI0_MISO/ SCT0_OUT4
PIO0_12/ SPI0_MOSI/ U1_TXD
PIO0_11/ SPI0_SCK/ U1_RXD
PIO0_10/ U2_SCLK/ SCT0_OUT3
PIO0_9/ U2_TXD/ SCT0_OUT2/ SPI0_SSEL0
PIO0_8/ U2_RXD/ SCT0_OUT1
PIO1_11/ U1_RTS
PIO0_7/ U1_SCLK/ SCT0_OUT0
PIO0_6/ U1_TXD
PIO0_5/ U1_RXD/ SCT0_OUT6
PIO0_4/ U0_SCLK/ SPIO0_SSEL2
PIO0_3/ U0_RTS
PIO0_2/ U0_CTS
PIO1_10/ U1_TXD/ SCT_OUT4
PIO1_9/ SPI0_MOSI
PIO1_8/ ADC0_11/ SPI1_MISO
PIO1_7/ ADC0_10/ SPI1_MOSI
PIO1_6/ ADC0_9/ SPI1_SCK
PIO1_5/ ADC0_8/ SPI1_SSEL0
PIO1_4/ ADC0_7/ SPI1_SSEL1/ SCT0_OUT7/ SPI0_MISO
PIO1_3/ ADC0_6/ SPI1_SSEL2/ SCT0_OUT6/ SPIO0_SCK
PIO1_2/ ADC0_5/ SPI1_SSEL3/ SCT0_OUT5
PIO1_1/ ADC0_4/ SCT0_OUT4
PIO1_0/ ADC0_3/ U2_RTS
PIO0_30/ ADC0_1/ SCT0_OUT3
PIO0_29/ ADC0_0/ SCT0_OUT2
PIO1_17
PIO1_16/ SPI1_SSEL1
PIO0_28/ I2C_SDA
PIO0_27/ I2C_SCL
PIO0_26/ I2C1_SDA
PIO0_25/ I2C1_SCL/ U1_CTS
PIO0_24/ I2C0_SDA
PIO0_23/ I2C0_SCL
SPI_DC
MOTOR_IN1
MOTOR_IN2
SPI_RES
SPI_MOSI
SPI_CLK
MIC_ADC
LED_PAUSED
LED_RUNNING
LED_STOPPED
RESTART_BUTTON
PAUSE_BUTTON
PLAY_BUTTON
POT_ADC
SPI_CS1
UP_BUTTON
DOWN_BUTTON
BUCK_EN
C13
10uF
C12
100nF
C11
100nF
C14
10nF
S2
RST
USB Connection
P4
VUSB
USB_DP
USB_DM
GND
USB PORT
L3
Ferrite Bead
40ohm/100MHz
C40
10nF
C41
100nF
C42
4.7uF
U7
FT231X
3V3OUT
RESET#
VCCIO
VCC
TXD
RXD
RTS#
CTS#
DTR#
DSR#
DCD#
RI#
USBDP
USBDM
CBUS0
CBUS1
CBUS2
CBUS3
768-1129-2-ND
UART0_TX
UART0_RX
ISP
RESET
USB_ACTIVITY
C43
100nF
R19
27R0
R20
27R0
C44
47pF
C45
47pF
D8
USB
R34
820
D7
Transfer
R22
820
R35
10K
Buttons and Displays
R29
1K
S3
UP
C46
220nF
R30
1K
S4
DOWN
C47
220nF
PM1
64x128 PMOLED
GND
VCC
CLK
MOSI
RES
DC
CS
R31
1K
S5
PLAY
C48
220nF
R32
1K
S6
PAUSE
C49
220nF
R33
1K
S7
RESTART
C50
220nF
Status LEDs
D9
Red
D10
Yellow
D11
Green
R23
220
R24
220
R25
220
Q1
MOSFET-N
Q2
MOSFET-N
Q3
MOSFET-N
R26
10K
R27
10K
R28
10K
LED_STOPPED
LED_PAUSED
LED_RUNNING
Stopped
Paused
Running
Title
Auto Turn
Size
A3
Number
1
Revision
1
Date:
24/08/2017
Sheet 1 of 1
File:
C:\Users\..\auto_turn.SchDoc
Drawn By:
Michael Manansala

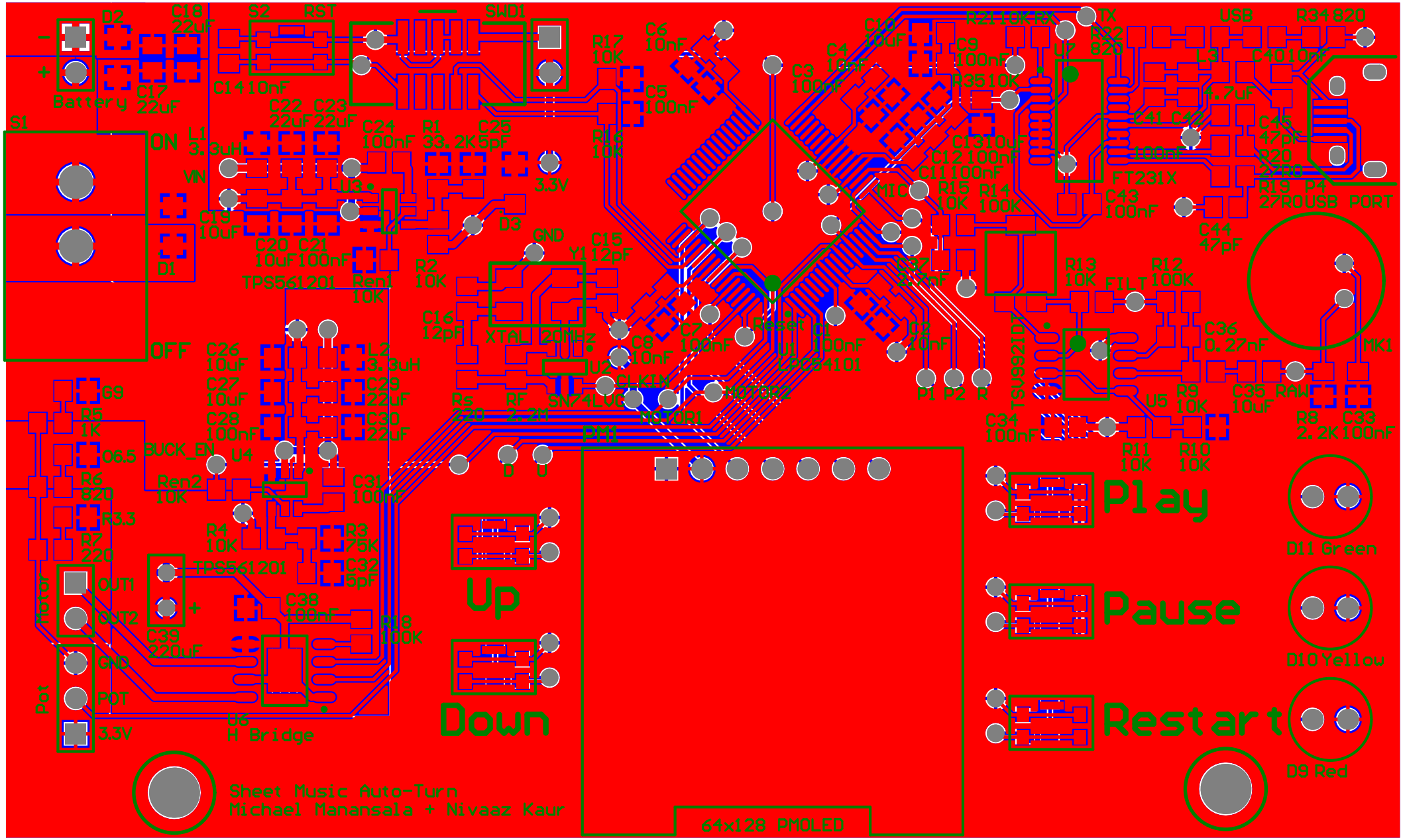
Battery
S1
ON
OFF
D2
C18 22uF
C17 22uF
S2 RST
SWD1
C14 10nF
C22 22uF
C23 22uF
L1 3.3uH
VIN
C19 10uF
C20 10uF
C21 100nF
TPS561201
Ren1 10K
D1
C24 100nF
R1 33.2K
C25 5pF
3.3V
D3
R2 10K
GND
C15 12pF
Y1
C16 12pF
XTAL 20MHz
R17 10K
C6 10nF
C5 100nF
R16 10K
C4 10nF
C3 100nF
C10 10uF
R24 10K RX
TX
C9 100nF
R35 10K
U2
R32 820
USB
R34 820
L3
C40 10nF
4.7uF
C41 C42
C45 47pF
C20 22pF
R19 27R
D4
USB PORT
C13 10uF
C12 100nF
C11 100nF
MIC
R15 10K
R14 100K
FT231X
C43 100nF
C44 47pF
C37 100nF
R13 10K
R12 100K
FILT
C36 0.27nF
MK1
C8 10nF
C7 100nF
Reset
C1 100nF
U1 22C84101
U3 10uF
TSV912IDT
P1 P2 R
U5
R9 10K
C35 10uF
RAW
R8 2.2K
C33 100nF
C34 100nF
R11 10K
R10 10K
C26 10uF
C27 10uF
C28 100nF
L2 3.3uH
C29 22uF
C30 22uF
R5 220
RF 2.2M
U2 SN74LVC
CLK
MOSI
MISO
PM1
D
U
G3
R5 1K
06.5
R6 820
R3.3
R7 220
BUCK_EN
U4
Ren2 10K
C31 100nF
R4 10K
R3 75K
C32 5pF
TPS561201
C38 100nF
C39 220uF
PM8 100K
U6 H Bridge
OUT1
OUT2
GND
POT
3.3V
Pot
Up
Down
64x128 PMOLED
Play
Pause
Restart
D11 Green
D10 Yellow
D9 Red
Sheet Music Auto-Turn
Michael Manansala + Nivaaz Kaur

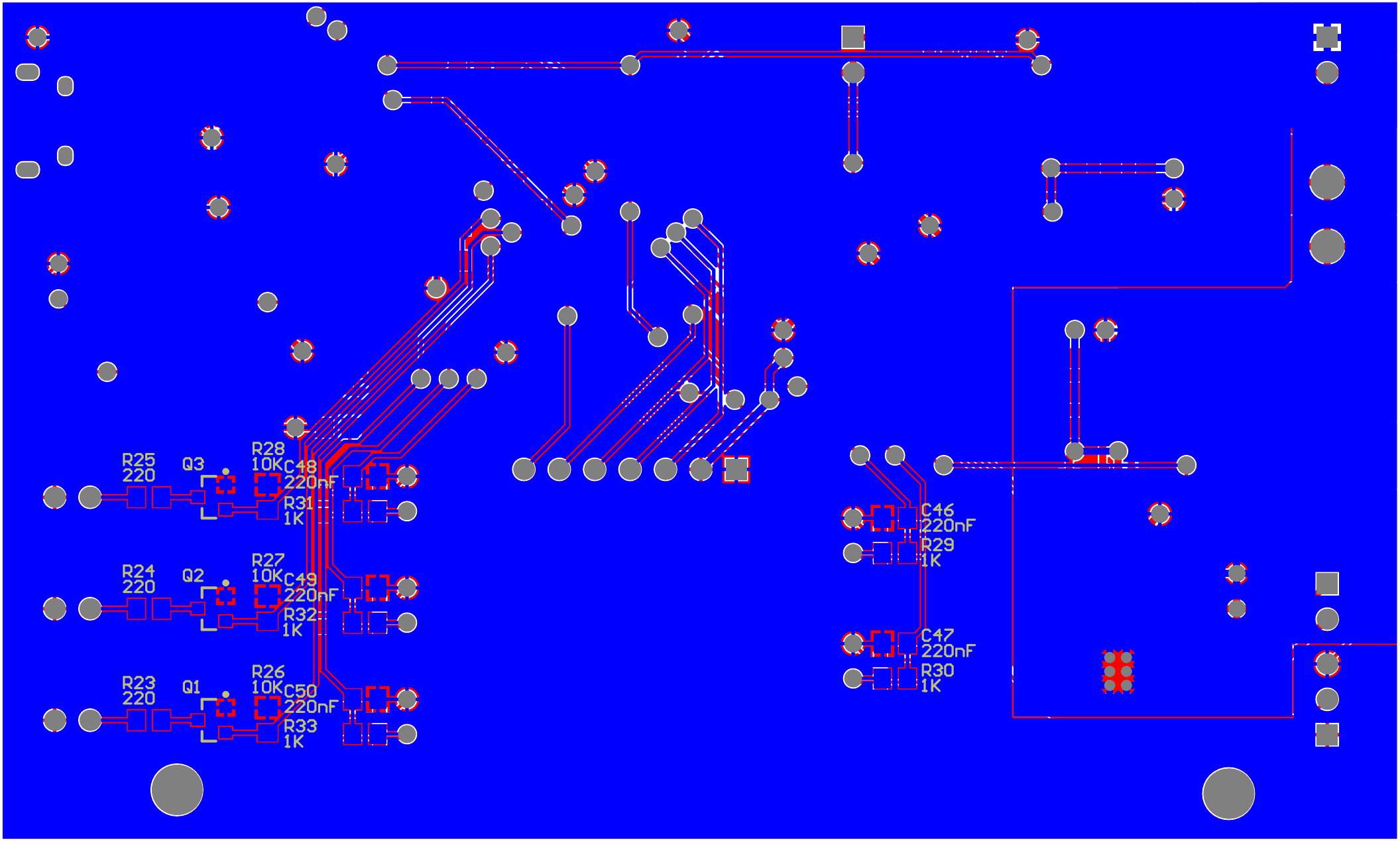
R25
220
Q3
R28
10K
C48
220nF
R31
1K
R24
220
Q2
R27
10K
C49
220nF
R32
1K
R23
220
Q1
R26
10K
C50
220nF
R33
1K
C46
220nF
R29
1K
C47
220nF
R30
1K