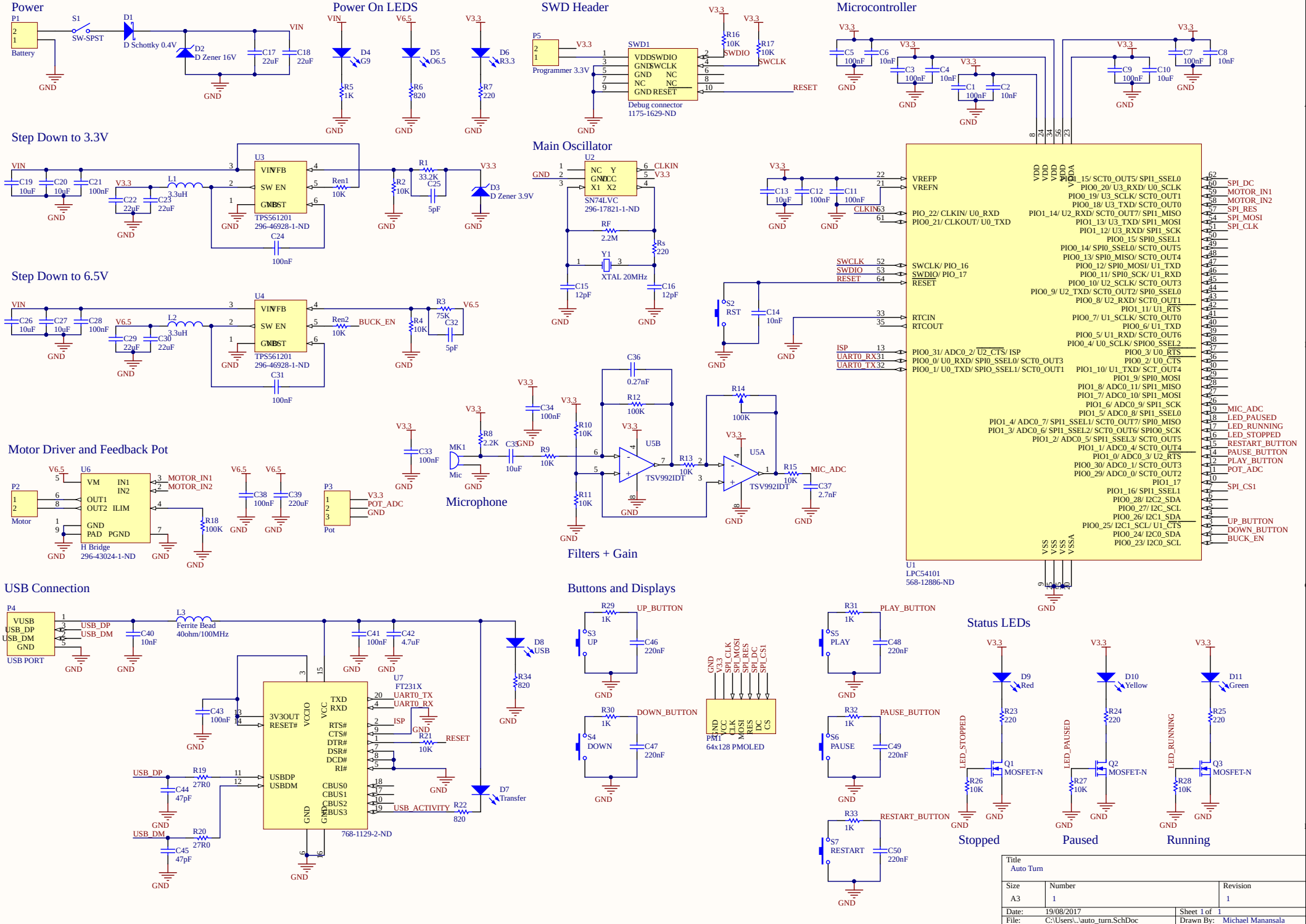
Power
P1
Battery
S1
SW-SPST
D1
D Schottky 0.4V
D2
D Zener 16V
C17
22uF
C18
22uF
VIN
GND
Power On LEDS
D4
G9
D5
O6.5
D6
R3.3
R5
1K
R6
820
R7
220
SWD Header
P5
Programmer 3.3V
SWD1
Debug connector
1175-1629-ND
R16
10K
SWDIO
R17
10K
SWCLK
RESET
Microcontroller
C5
100nF
C6
10nF
C3
100nF
C4
10nF
C1
100nF
C2
10nF
C7
100nF
C8
10nF
C9
100nF
C10
10uF
Step Down to 3.3V
U3
TPS561201
296-46928-1-ND
C19
10uF
C20
10uF
C21
100nF
L1
3.3uH
C22
22uF
C23
22uF
C24
100nF
Ren1
10K
R1
33.2K
C25
5pF
R2
10K
D3
D Zener 3.9V
Main Oscillator
U2
SN74LVC
296-17821-1-ND
CLKIN
RF
2.2M
Rs
220
Y1
XTAL 20MHz
C15
12pF
C16
12pF
Step Down to 6.5V
U4
TPS561201
296-46928-1-ND
C26
10uF
C27
10uF
C28
100nF
L2
3.3uH
C29
22uF
C30
22uF
C31
100nF
Ren2
10K
BUCK_EN
R3
75K
C32
5pF
R4
10K
V6.5
Motor Driver and Feedback Pot
U6
H Bridge
296-43024-1-ND
P2
Motor
MOTOR_IN1
MOTOR_IN2
C38
100nF
C39
220uF
R18
100K
P3
Pot
POT_ADC
Microphone
MK1
Mic
R8
2.2K
C33
10uF
C34
100nF
Filters + Gain
C36
0.27nF
R12
100K
R10
10K
R11
10K
R9
10K
U5B
TSV992ID1
R13
10K
R14
100K
U5A
TSV992ID1
R15
10K
MIC_ADC
C37
2.7nF
USB Connection
P4
USB PORT
USB_DP
USB_DM
C40
10nF
L3
Ferrite Bead
40ohm/100MHz
C41
100nF
C42
4.7uF
U7
FT231X
768-1129-2-ND
3V3OUT
RESET#
VCCIO
VCC
TXD
RXD
RTS#
CTS#
DTR#
DSR#
DCD#
RI#
USBDP
USBDM
CBUS0
CBUS1
CBUS2
CBUS3
GND
C43
100nF
R19
27R0
R20
27R0
C44
47pF
C45
47pF
UART0_TX
UART0_RX
ISP
R21
10K
USB_ACTIVITY
R22
820
D7
Transfer
D8
USB
R34
820
Buttons and Displays
R29
1K
UP_BUTTON
S3
UP
C46
220nF
R30
1K
DOWN_BUTTON
S4
DOWN
C47
220nF
PM1
64x128 PMOLED
R31
1K
PLAY_BUTTON
S5
PLAY
C48
220nF
R32
1K
PAUSE_BUTTON
S6
PAUSE
C49
220nF
R33
1K
RESTART_BUTTON
S7
RESTART
C50
220nF
Status LEDs
D9
Red
D10
Yellow
D11
Green
R23
220
R24
220
R25
220
Q1
MOSFET-N
Q2
MOSFET-N
Q3
MOSFET-N
R26
10K
R27
10K
R28
10K
LED_STOPPED
LED_PAUSED
LED_RUNNING
Stopped
Paused
Running
U1
LPC54101
568-12886-ND
VREFP
VREFN
CLKIN
SWCLK
SWDIO
RESET
RTCIN
RTCOUT
ISP
UART0_RX
UART0_TX
SPI_DC
MOTOR_IN1
MOTOR_IN2
SPI_RES
SPI_MOSI
SPI_CLK
MIC_ADC
LED_PAUSED
LED_RUNNING
LED_STOPPED
RESTART_BUTTON
PAUSE_BUTTON
PLAY_BUTTON
POT_ADC
SPI_CS1
UP_BUTTON
DOWN_BUTTON
BUCK_EN
Title
Auto Turn
Size
A3
Number
1
Revision
1
Date:
19/08/2017
Sheet 1 of 1
File:
C:\Users\..\auto_turn.SchDoc
Drawn By:
Michael Manansala

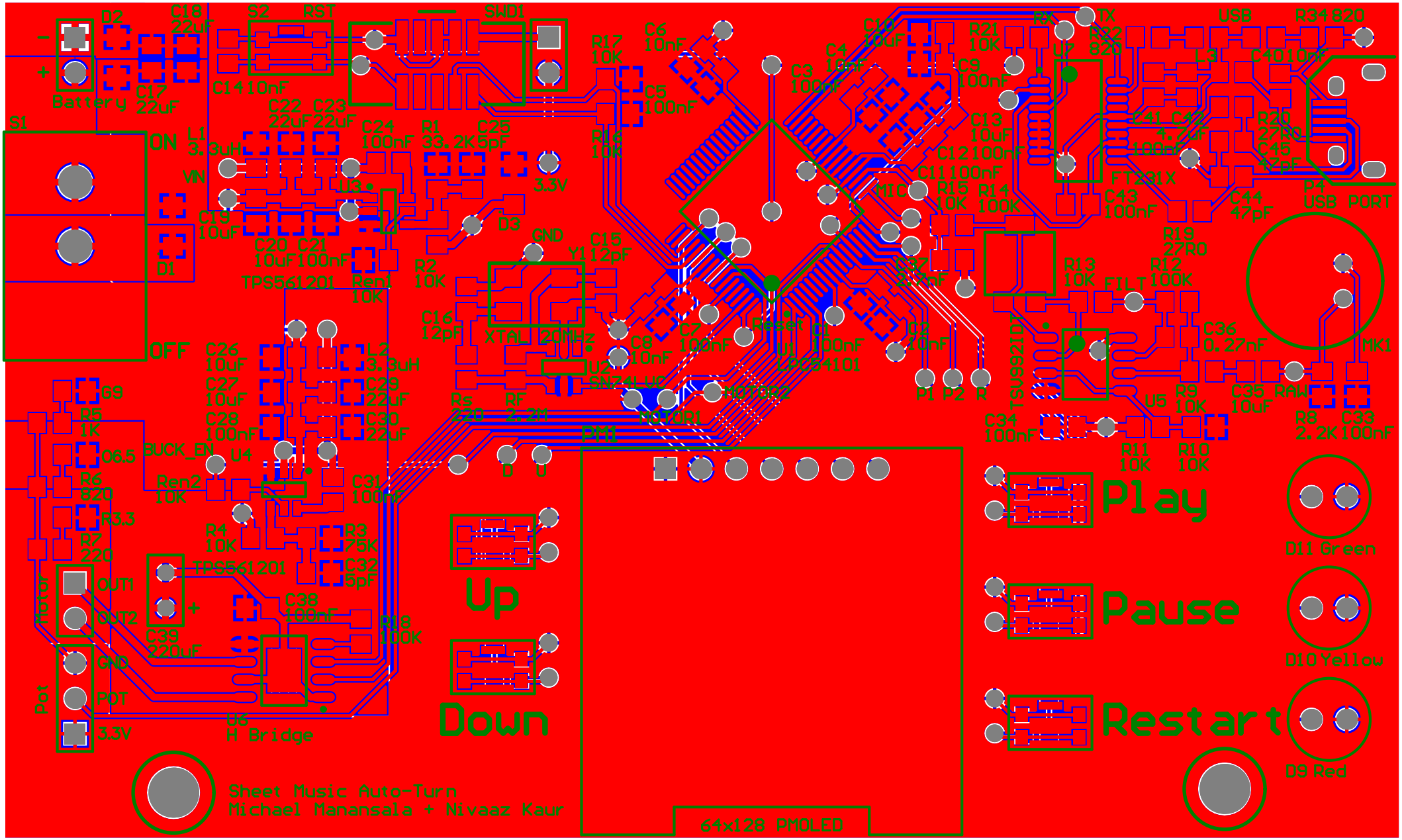
Battery
S1
ON
OFF
D2
C18 22uF
C17 22uF
S2 RST
SWD1
C14 10nF
L1 3.3uH
VIN
C19 10uF
D1
C20 10uF
C21 100nF
TPS561201
Ren1 10K
C22 22uF
C23 22uF
C24 100nF
R1 33.2K
C25 5pF
3.3V
D3
GND
R2 10K
C16 12pF
XTAL 20MHz
Y1 12pF
R17 10K
C6 10nF
C5 100nF
R16 10K
C3 100nF
C4 1pF
C10 10uF
R21 10K
C9 100nF
C13 10uF
C12 100nF
C11 100nF
R15 10K
R14 100K
MIC
C43 100nF
C37 100nF
U1 CC2534101
Reset
P1 P2 R
C8 10nF
C7 100nF
U2 SN74LVC
Rs 220
RF 2.2M
D
U
PM1
C26 10uF
C27 10uF
C28 100nF
L2 3.3uH
C29 22uF
C30 22uF
BUCK_EN
U4
Ren2 10K
C31 100nF
R4 10K
R3 75K
C32 5pF
TPS561201
C38 100nF
R18 100K
C39 220uF
U3 H Bridge
OUT1
OUT2
GND
POT
3.3V
Pot
G9
R5 1K
G6.5
R6 820
R3.3
R7 220
Up
Down
64x128 PMOLED
Play
Pause
Restart
D11 Green
D10 Yellow
D9 Red
Sheet Music Auto-Turn
Michael Manansala + Nivaaz Kaur
RX
TX
U2 820
R22 820
L3
USB
R34 820
C40 10nF
C41 4.7uF
C42 100nF
F1231X
R20 27R0
C45 47pF
C44 47pF
J4 USB PORT
R19 27R0
R13 10K
R12 100K
FILT
TSV821DBV
C36 0.27nF
MK1
U5
R9 10K
C35 10uF
RAW
R8 2.2K
C33 100nF
C34 100nF
R11 10K
R10 10K

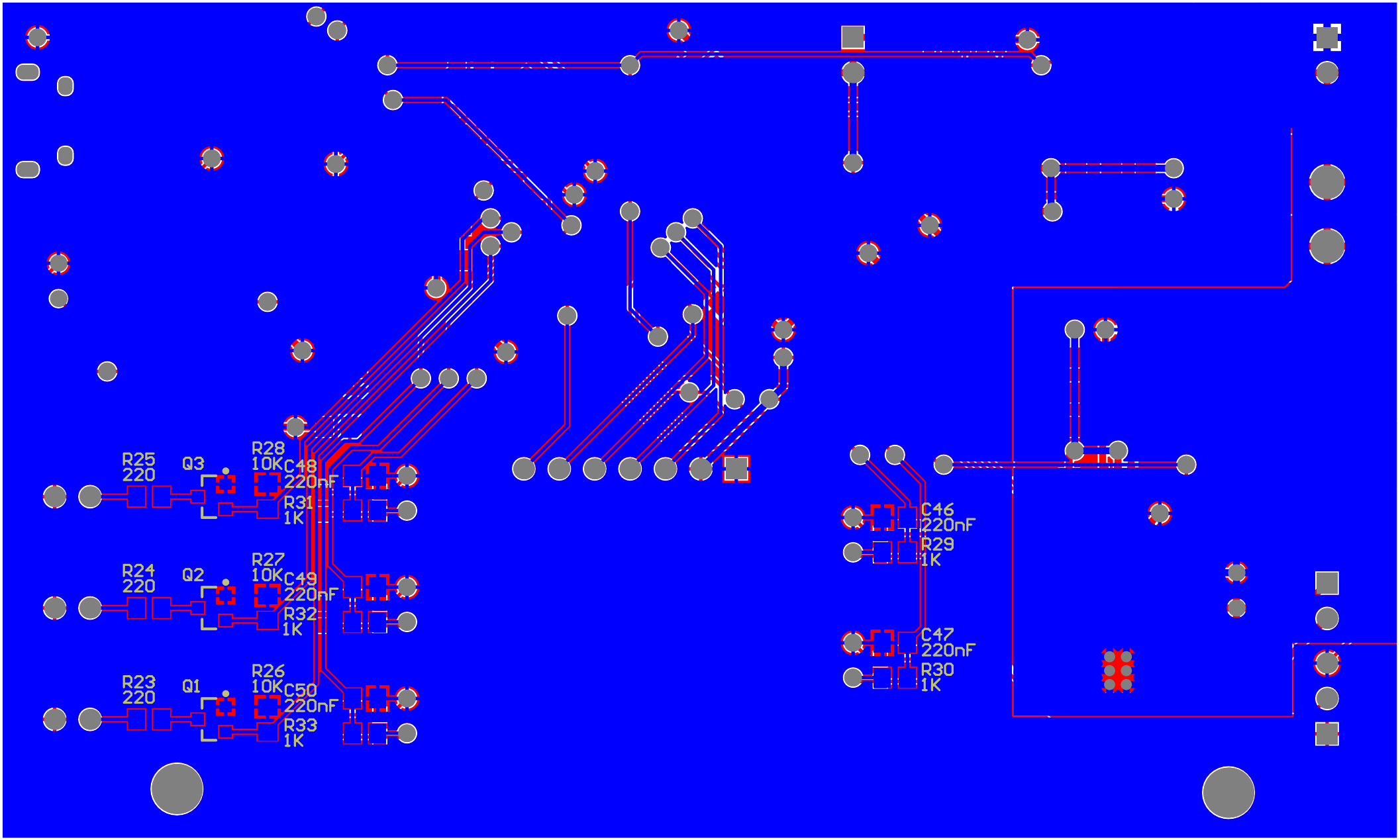
R25
220
Q3
R28
10K
C48
220nF
R31
1K
R24
220
Q2
R27
10K
C49
220nF
R32
1K
R23
220
Q1
R26
10K
C50
220nF
R33
1K
C46
220nF
R29
1K
C47
220nF
R30
1K