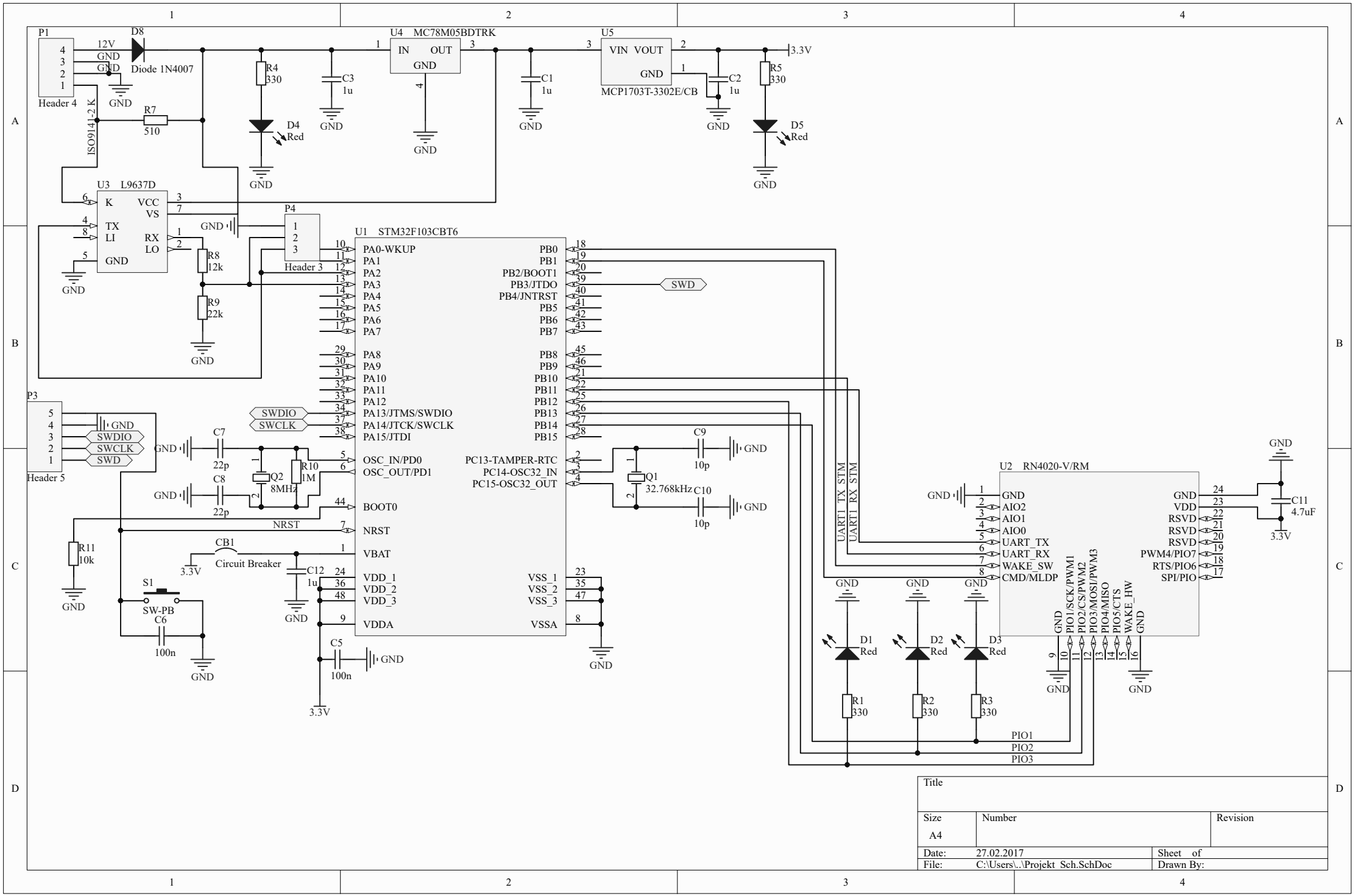

Title		
Size A4	Number	Revision
Date: 27.02.2017		Sheet of
File: C:\Users\..\Projekt Sch.SchDoc		Drawn By: