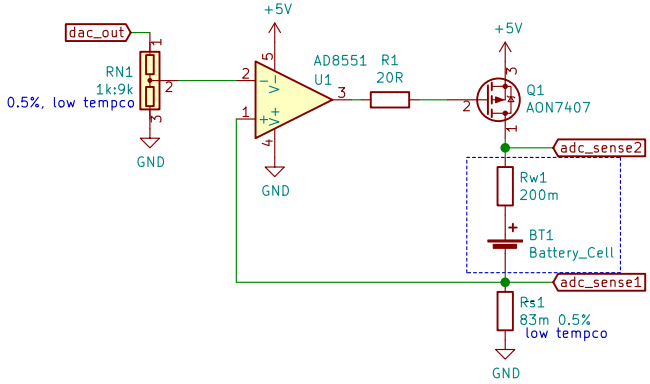

Komunikacja:
wyprowadzam wszystko,
później zdecyduję czy uart wystarczy czy RS-485 potrzebny

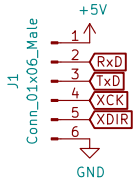

Zasilanie:

Programowanie:

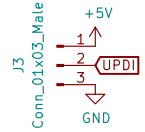

ledy żeby coś migało

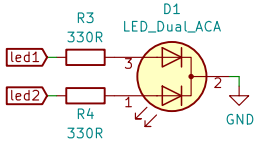

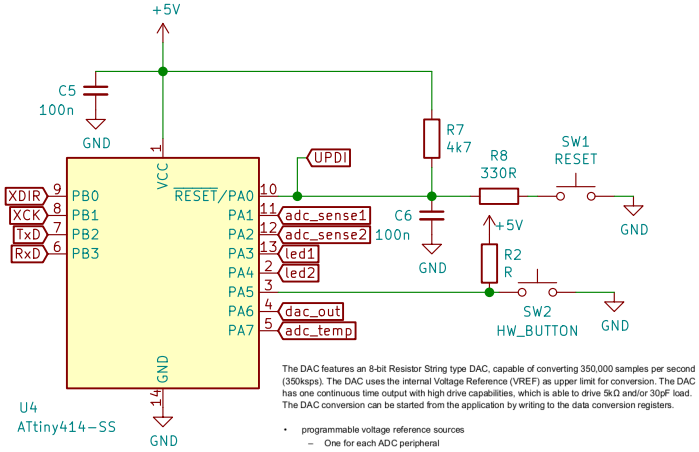

The DAC features an 8-bit Resistor String type DAC, capable of converting 350,000 samples per second (350ksps). The DAC uses the internal Voltage Reference (VREF) as upper limit for conversion. The DAC has one continuous time output with high drive capabilities, which is able to drive 5kΩ and/or 30pF load. The DAC conversion can be started from the application by writing to the data conversion registers.

- programmable voltage reference sources
  - One for each ADC peripheral
  - One for each AC and DAC peripheral
- Each reference source supports five different voltages:
  - 0.55V
  - 1.1V
  - 1.5V
  - 2.5V
  - 4.3V

Sheet: /
File: charger-v2.sch

Title:

Size: A4	Date:	Rev:
KiCad E.D.A. kicad 5.1.4-e60b26684ubuntu18.04.1		Id: 1/1