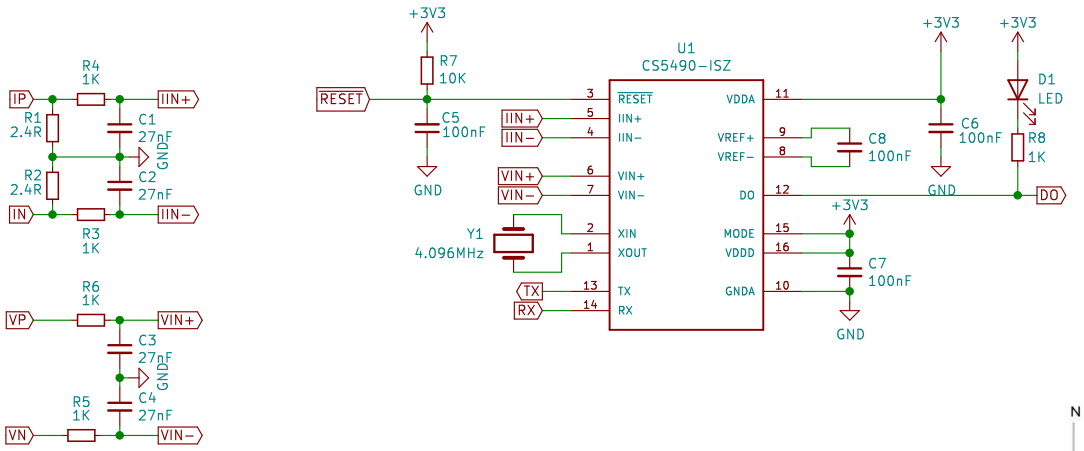

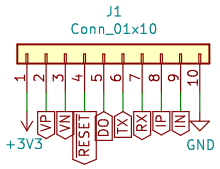

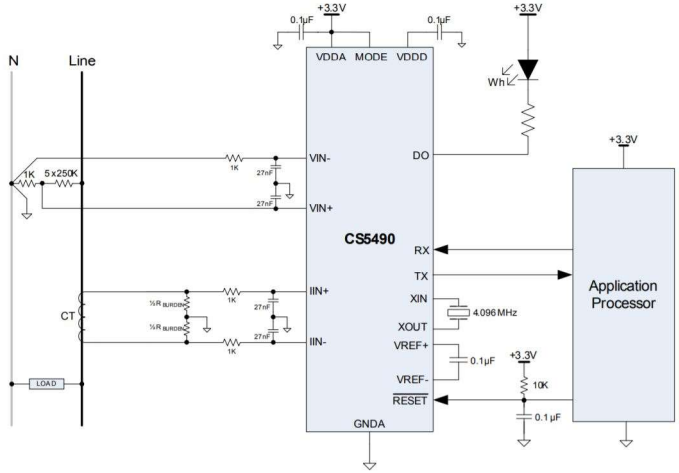

Figure 21. Typical Connection Diagram *(Single-phase, Two-wire, Power Meter)*

Sheet: /		
File: CS5490_Breakout.sch		
Title: CS5490 Energy Monitor Breakout		
Size: A4	Date: 2020-06-13	**Rev:** v0.2
KiCad E.D.A. kicad (5.1.6)-1		Id: 1/1