Distributed Hypothesis Testing: Unequal Error Protection and Concurrent Detection

Michèle Wigger
Telecom ParisTech
Joint work with P. Escamilla, R. Timo, S. Salehkalaibar, L. Wang, and A. Zaidi

Journée Recherche Digiteo, Paris Saclay
June 6, 2018

Example: Distributed Control-System for Smart Cars

- Smart cars measuring speed, distance, road conditions
- Fixed road-side sensors measuring same parameters

- Intact car system: measurements highly correlated
- Erroneous car system: measurements independent

Task of Distributed Control-System

Decide on joint distribution underlying the observations

Distributed Hypothesis Testing

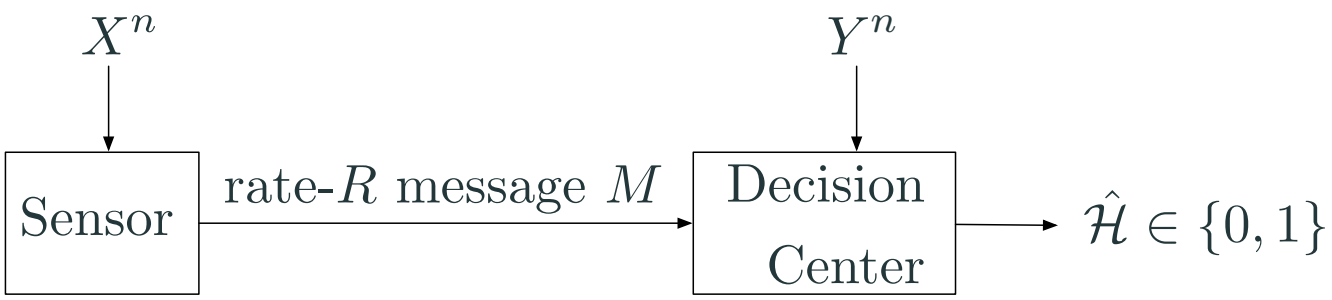

- "Normal situation" $\mathcal{H} = 0$: $(X^n, Y^n) \sim$ i.i.d. P_{XY}
- "Hazardous event" $\mathcal{H} = 1$: $(X^n, Y^n) \sim$ i.i.d. Q_{XY}

- Probability of false alarm: $\alpha_n = \mathbb{P}\big[\hat{\mathcal{H}} = 1 | \mathcal{H} = 0\big] < \epsilon$
- Probability of miss detection: $\beta_n = \mathbb{P}\big[\hat{\mathcal{H}} = 0 | \mathcal{H} = 1\big] < 2^{-n\theta}$

Rate-Exponent Tradeoff $\theta^\star(R)$

Given $R > 0$, largest exponent θ that is achievable $\forall \epsilon > 0$

Centralized Hypothesis Testing — The Ideal Case

Centralized Hypothesis Testing

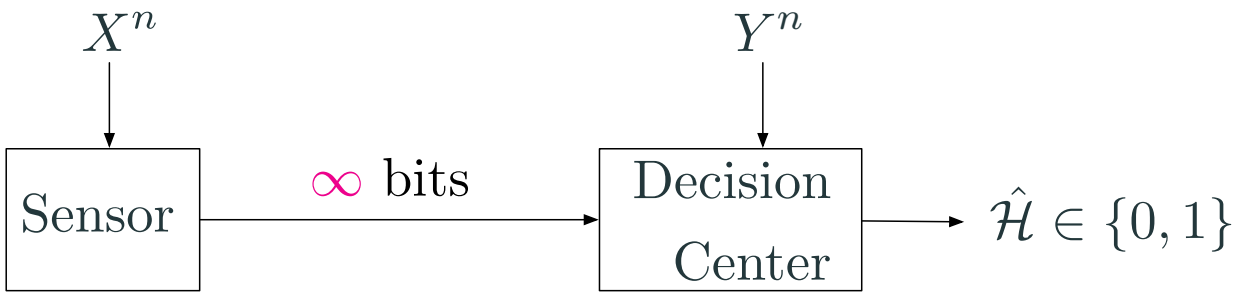

- Rate R is so large that sensor can send *all* X^n to decision center

- Optimal decision: raise alarm unless statistics $\mathrm{tp}\,(X^n, Y^n) \approx P_{XY}$

- Intuition: If system perfectly fits $\mathcal{H} = 0$, decide on $\hat{\mathcal{H}} = 0$, otherwise decide on $\hat{\mathcal{H}} = 1$

Example of Doubly-Symmetric Binary Sources

$$P_{XY}(x,y) = \begin{cases} 1/3 & x = y \\ 1/6 & x \neq y \end{cases} \qquad \text{and} \qquad Q_{XY}(x,y) = \frac{1}{2} \cdot \frac{1}{2}$$

- Ex. 1: if observations

$$\begin{aligned} X^n &= (0,1,1,1,0,1,0,1,0,1,1,0,1,0,0,1,1,0,0) \\ Y^n &= (0,0,1,1,0,1,0,1,0,1,0,1,1,1,0,1,0,1,0) \end{aligned}$$

$\text{tp}\,(X^n, Y^n) = P_{XY} \rightarrow$ decision center decides on $\hat{\mathcal{H}} = 0$

Example of Doubly-Symmetric Binary Sources

$$P_{XY}(x,y) = \begin{cases} 1/3 & x = y \\ 1/6 & x \neq y \end{cases} \qquad \text{and} \qquad Q_{XY}(x,y) = \frac{1}{2} \cdot \frac{1}{2}$$

- Ex. 1: if observations

$$\begin{aligned} X^n &= (0,1,1,1,0,1,0,1,0,1,1,0,1,0,0,1,1,0,0) \\ Y^n &= (0,0,1,1,0,1,0,1,0,1,0,1,1,1,0,1,0,1,0) \end{aligned}$$

$\text{tp}\,(X^n, Y^n) = P_{XY} \rightarrow$ decision center decides on $\hat{\mathcal{H}} = 0$

- Ex. 2: if observations

$$\begin{aligned} X^n &= (0,1,0,1,1,1,0,1,0,1,1,0,1,0,0,1,1,0,0) \\ Y^n &= (1,0,0,1,0,1,0,0,0,1,0,1,1,1,1,1,0,1,0) \end{aligned}$$

$\text{tp}\,(X^n, Y^n) \neq P_{XY} \rightarrow$ decision center decides on $\hat{\mathcal{H}} = 1$

Analysis of Proposed Scheme

- Probability of false alarm

$$\alpha_n = P_{XY}^{\otimes n}\Big(\mathrm{tp}\left(X^n, Y^n\right) \approx P_{XY}\Big)$$

Analysis of Proposed Scheme

- Probability of false alarm

$$\alpha_n = P_{XY}^{\otimes n}\Big(\mathrm{tp}\,(X^n, Y^n) \approx P_{XY}\Big) \to 1 \quad \text{as} \quad n \to \infty$$

by the weak law of large numbers

Analysis of Proposed Scheme

- Probability of false alarm

$$\alpha_n = P_{XY}^{\otimes n}\Big(\mathrm{tp}\,(X^n, Y^n) \approx P_{XY}\Big) \to 1 \quad \text{as} \quad n \to \infty$$

by the weak law of large numbers

- Probability of miss detection:

$$\begin{aligned} \beta_n &= Q_{XY}^{\otimes n}\Big(\mathrm{tp}\,(X^n, Y^n) \approx P_{XY}\Big) \\ &= \ldots \end{aligned}$$

Mathematical Preliminaries: Sanov's Theorem

- sequences $\mathbf{x} = (x_1, \ldots, x_n)$ and $\mathbf{y} = (y_1, \ldots, y_n)$ of statistics $\pi_{\mathbf{xy}}$

$$Q_{XY}^{\otimes n}(\mathbf{x}, \mathbf{y}) = \prod_{i=1}^{n} Q_{XY}(x_i, y_i) = \prod_{(x,y) \in \mathcal{X} \times \mathcal{Y}} \big(Q_{XY}(x, y)\big)^{n \cdot \pi_{\mathbf{xy}}(x,y)}$$

Theorem (Sanov's theorem)

$$Q_{XY}^{\otimes n}\Big(\mathrm{tp}\,(X^n, Y^n) = \pi\Big) \approx \exp\big(-n \cdot D(\pi || Q_{XY})\big)$$

Mathematical Preliminaries: Sanov's Theorem

- sequences $\mathbf{x} = (x_1, \ldots, x_n)$ and $\mathbf{y} = (y_1, \ldots, y_n)$ of statistics $\pi_{\mathbf{xy}}$

$$Q_{XY}^{\otimes n}(\mathbf{x}, \mathbf{y}) = \prod_{i=1}^{n} Q_{XY}(x_i, y_i) = \prod_{(x,y)\in\mathcal{X}\times\mathcal{Y}} \big(Q_{XY}(x, y)\big)^{n\cdot\pi_{\mathbf{xy}}(x,y)}$$

$$= \quad \exp\Big(n \cdot \sum_{(x,y)\in\mathcal{X}\times\mathcal{Y}} \pi_{\mathbf{xy}}(x, y) \cdot \log Q_{XY}(x, y)\Big)$$

Theorem (Sanov's theorem)

$$Q_{XY}^{\otimes n}\Big(\mathrm{tp}\,(X^n, Y^n) = \pi\Big) \approx \exp\big(-n \cdot D(\pi||Q_{XY})\big)$$

Mathematical Preliminaries: Sanov's Theorem

- sequences $\mathbf{x} = (x_1, \ldots, x_n)$ and $\mathbf{y} = (y_1, \ldots, y_n)$ of statistics $\pi_{\mathbf{xy}}$

$$
\begin{aligned}
Q_{XY}^{\otimes n}(\mathbf{x}, \mathbf{y}) = \prod_{i=1}^{n} Q_{XY}(x_i, y_i) &= \prod_{(x,y)\in\mathcal{X}\times\mathcal{Y}} \big(Q_{XY}(x,y)\big)^{n\cdot\pi_{\mathbf{xy}}(x,y)} \\
&= \exp\Big(n \cdot \sum_{(x,y)\in\mathcal{X}\times\mathcal{Y}} \pi_{\mathbf{xy}}(x,y) \cdot \log Q_{XY}(x,y)\Big) \\
&= \exp\Big(-n \cdot \sum_{(x,y)\in\mathcal{X}\times\mathcal{Y}} \pi_{\mathbf{xy}}(x,y)\Big(\log \frac{\pi_{\mathbf{xy}}(x,y)}{Q_{XY}(x,y)} + \log \frac{1}{\pi_{\mathbf{xy}}(x,y)}\Big)\Big)
\end{aligned}
$$

Theorem (Sanov's theorem)

$$
Q_{XY}^{\otimes n}\Big(\mathrm{tp}\,(X^n, Y^n) = \pi\Big) \approx \exp\big(-n \cdot D(\pi || Q_{XY})\big)
$$

Mathematical Preliminaries: Sanov's Theorem

- sequences $\mathbf{x} = (x_1, \ldots, x_n)$ and $\mathbf{y} = (y_1, \ldots, y_n)$ of statistics $\pi_{\mathbf{xy}}$

$$
\begin{aligned}
Q_{XY}^{\otimes n}(\mathbf{x}, \mathbf{y}) = \prod_{i=1}^{n} Q_{XY}(x_i, y_i) &= \prod_{(x,y)\in\mathcal{X}\times\mathcal{Y}} \big(Q_{XY}(x,y)\big)^{n\cdot\pi_{\mathbf{xy}}(x,y)} \\
&= \exp\Big(n \cdot \sum_{(x,y)\in\mathcal{X}\times\mathcal{Y}} \pi_{\mathbf{xy}}(x,y) \cdot \log Q_{XY}(x,y)\Big) \\
&= \exp\Big(-n \cdot \sum_{(x,y)\in\mathcal{X}\times\mathcal{Y}} \pi_{\mathbf{xy}}(x,y)\Big(\log \frac{\pi_{\mathbf{xy}}(x,y)}{Q_{XY}(x,y)} + \log \frac{1}{\pi_{\mathbf{xy}}(x,y)}\Big)\Big) \\
&= \exp(-n \cdot (D(\pi_{\mathbf{xy}} || Q_{XY}) + H(\pi_{\mathbf{xy}})))
\end{aligned}
$$

Theorem (Sanov's theorem)

$$
Q_{XY}^{\otimes n}\Big(\mathrm{tp}\,(X^n, Y^n) = \pi\Big) \approx \exp\big(-n \cdot D(\pi || Q_{XY})\big)
$$

Mathematical Preliminaries: Sanov's Theorem

- sequences $\mathbf{x} = (x_1, \ldots, x_n)$ and $\mathbf{y} = (y_1, \ldots, y_n)$ of statistics $\pi_{\mathbf{xy}}$

$$
\begin{aligned}
Q_{XY}^{\otimes n}(\mathbf{x}, \mathbf{y}) = \prod_{i=1}^{n} Q_{XY}(x_i, y_i) &= \prod_{(x,y)\in\mathcal{X}\times\mathcal{Y}} \big(Q_{XY}(x,y)\big)^{n\cdot\pi_{\mathbf{xy}}(x,y)} \\
&= \exp\Big(n \cdot \sum_{(x,y)\in\mathcal{X}\times\mathcal{Y}} \pi_{\mathbf{xy}}(x,y) \cdot \log Q_{XY}(x,y)\Big) \\
&= \exp\Big(-n \cdot \sum_{(x,y)\in\mathcal{X}\times\mathcal{Y}} \pi_{\mathbf{xy}}(x,y)\Big(\log \frac{\pi_{\mathbf{xy}}(x,y)}{Q_{XY}(x,y)} + \log \frac{1}{\pi_{\mathbf{xy}}(x,y)}\Big)\Big) \\
&= \exp(-n \cdot (D(\pi_{\mathbf{xy}} || Q_{XY}) + H(\pi_{\mathbf{xy}})))
\end{aligned}
$$

Theorem (Sanov's theorem)

$$
Q_{XY}^{\otimes n}\Big(\mathrm{tp}\,(X^n, Y^n) = \pi\Big) \approx \exp\big(-n \cdot D(\pi || Q_{XY})\big)
$$

Mathematical Preliminaries: Sanov's Theorem

- sequences $\mathbf{x} = (x_1, \ldots, x_n)$ and $\mathbf{y} = (y_1, \ldots, y_n)$ of statistics $\pi_{\mathbf{xy}}$

$$
\begin{aligned}
Q_{XY}^{\otimes n}(\mathbf{x}, \mathbf{y}) = \prod_{i=1}^{n} Q_{XY}(x_i, y_i) &= \prod_{(x,y)\in\mathcal{X}\times\mathcal{Y}} \big(Q_{XY}(x,y)\big)^{n\cdot\pi_{\mathbf{xy}}(x,y)} \\
&= \exp\Big(n \cdot \sum_{(x,y)\in\mathcal{X}\times\mathcal{Y}} \pi_{\mathbf{xy}}(x,y) \cdot \log Q_{XY}(x,y)\Big) \\
&= \exp\Big(-n \cdot \sum_{(x,y)\in\mathcal{X}\times\mathcal{Y}} \pi_{\mathbf{xy}}(x,y)\Big(\log \frac{\pi_{\mathbf{xy}}(x,y)}{Q_{XY}(x,y)} + \log \frac{1}{\pi_{\mathbf{xy}}(x,y)}\Big)\Big) \\
&= \exp(-n \cdot (D(\pi_{\mathbf{xy}} || Q_{XY}) + H(\pi_{\mathbf{xy}})))
\end{aligned}
$$

Theorem (Sanov's theorem)

$$
Q_{XY}^{\otimes n}\Big(\mathrm{tp}\,(X^n, Y^n) = \pi\Big) \approx \exp\big(-n \cdot D(\pi || Q_{XY})\big)
$$

Use Sanov's Theorem to Finalize the Analysis

- Probability of false alarm

$$\alpha_n = P_{XY}^{\otimes n}\Big(\mathrm{tp}\,(X^n, Y^n) \approx P_{XY}\Big) \to 1 \quad \text{as} \quad n \to \infty$$

by the weak law of large numbers

- Probability of miss detection:

$$\beta_n \quad = \quad Q_{XY}^{\otimes n}\Big(\mathrm{tp}\,(X^n, Y^n) \approx P_{XY}\Big)$$

Use Sanov's Theorem to Finalize the Analysis

- Probability of false alarm

$$\alpha_n = P_{XY}^{\otimes n}\Big(\mathrm{tp}\,(X^n, Y^n) \approx P_{XY}\Big) \to 1 \quad \text{as} \quad n \to \infty$$

by the weak law of large numbers

- Probability of miss detection:

$$\begin{aligned} \beta_n &= Q_{XY}^{\otimes n}\Big(\mathrm{tp}\,(X^n, Y^n) \approx P_{XY}\Big) \\ &\approx \exp\big(-n \cdot D(P_{XY}||Q_{XY})\big) \end{aligned}$$

Optimal Exponent for Centralized Hypothesis Testing

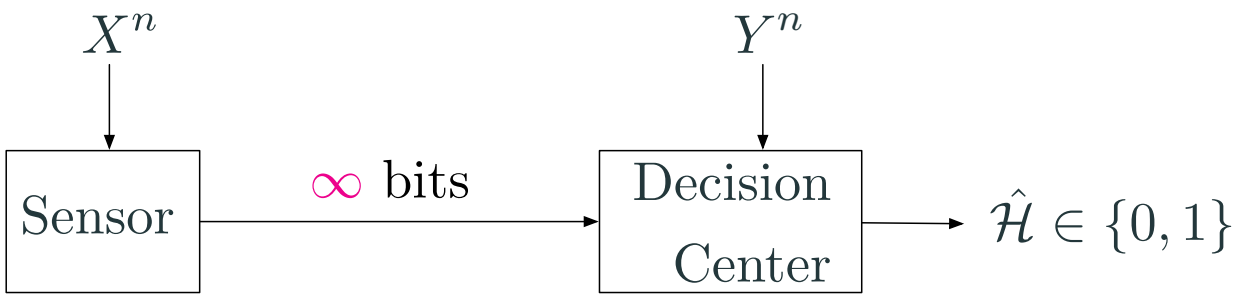

- Rate R is so large that sensor can send *all* X^n to decision center

Theorem (Stein's exponent)

Largest achievable error exponent is:

$$\theta^\star(R = \infty) = D(P_{XY} \| Q_{XY}) := \sum_{x,y} P_{XY}(x, y) \log \frac{P_{XY}(x, y)}{Q_{XY}(x, y)}$$

Distributed Hypothesis Testing with Zero Communication Rate $R = 0$

Distributed Hypothesis Testing with $R = 0$ (Han'87)

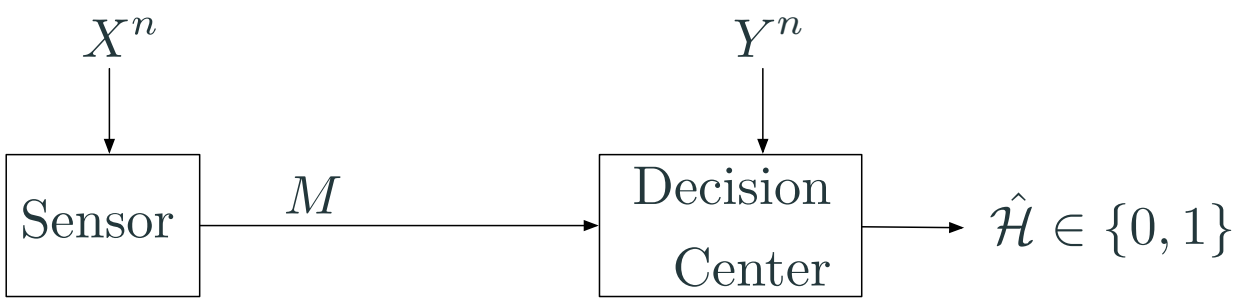

- Send message M, where $\log_2 |M|$ is sublinear in n

Theorem (Han'87)

Largest achievable error exponent is:

$$\theta^\star(R = 0) = \min_{\substack{\pi_{XY}: \\ \pi_X = P_X \\ \pi_Y = P_Y}} D(\pi_{XY} || Q_{XY})$$

Example of Doubly-Symmetric Binary Sources

$$P_{XY}(x,y) = \begin{cases} 1-p & x = y \\ p & x \neq y \end{cases} \quad \text{and } Q_{XY}(x,y) = \frac{1}{2} \cdot \frac{1}{2}$$

Notice: $Q_{XY} = P_X P_Y$ (*testing against independence*)

- Centralized testing ($R = \infty$):

$$\theta^\star = D(P_{XY} \| Q_{XY}) = D(P_{XY} \| P_X P_Y) = I(X;Y) = 1 - h_{\mathrm{b}}(p) > 0.$$

Example of Doubly-Symmetric Binary Sources

$$P_{XY}(x,y) = \begin{cases} 1-p & x = y \\ p & x \neq y \end{cases} \quad \text{and } Q_{XY}(x,y) = \frac{1}{2} \cdot \frac{1}{2}$$

Notice: $Q_{XY} = P_X P_Y$ (*testing against independence*)

- Centralized testing ($R = \infty$):

$$\theta^\star = D(P_{XY} \| Q_{XY}) = D(P_{XY} \| P_X P_Y) = I(X;Y) = 1 - h_{\mathrm{b}}(p) > 0.$$

- Distributed testing ($R = 0$):

$$\theta^\star = \min_{\substack{\pi_{XY}: \\ \pi_X = P_X \\ \pi_Y = P_Y}} D(\pi_{XY} || Q_{XY}) = D(P_X P_Y \| P_X P_Y) = 0.$$

Example of Doubly-Symmetric Binary Sources

$$P_{XY}(x,y) = \begin{cases} 1-p & x = y \\ p & x \neq y \end{cases} \quad \text{and } Q_{XY}(x,y) = \frac{1}{2} \cdot \frac{1}{2}$$

Notice: $Q_{XY} = P_X P_Y$ (*testing against independence*)

- Centralized testing ($R = \infty$):

$$\theta^\star = D(P_{XY} \| Q_{XY}) = D(P_{XY} \| P_X P_Y) = I(X;Y) = 1 - h_{\mathrm{b}}(p) > 0.$$

- Distributed testing ($R = 0$):

$$\theta^\star = \min_{\substack{\pi_{XY}: \\ \pi_X = P_X \\ \pi_Y = P_Y}} D(\pi_{XY} || Q_{XY}) = D(P_X P_Y \| P_X P_Y) = 0.$$

Notice: if $P_X \neq Q_X$ or $P_Y \neq Q_Y$, then $\theta^\star(R=0) > 0$

Scheme for $\underline{R = 0}$ (Han'87)

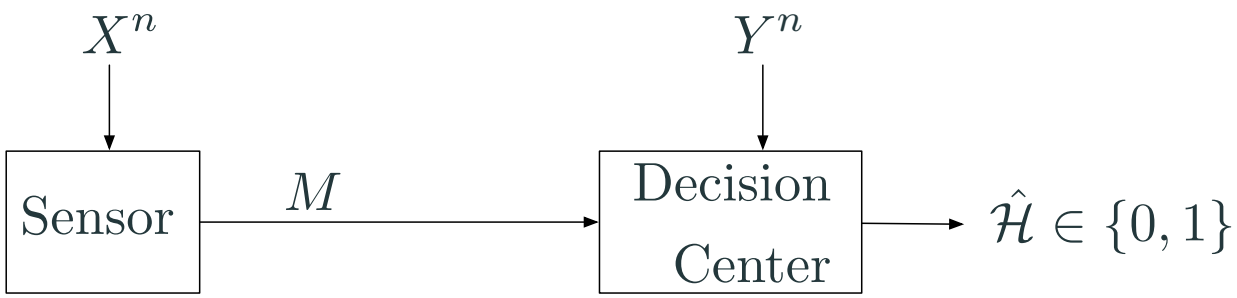

- $M \in \{0, 1\}$ (1 bit) suffices
- Sensor sends its own local decision:
  If $\mathrm{tp}\,(X^n) \approx P_X \to$ send $M = 0$, otherwise send $M = 1$
- Decision center:
  1. Local decision: $L = 0$ if $\mathrm{tp}\left(Y^n\right) \approx P_Y$ and $L = 1$ else
  2. Final decision: $\hat{\mathcal{H}} = 0$ if $M = L = 0$, and $\hat{\mathcal{H}} = 1$ else.

Example of Doubly-Symmetric Binary Sources

$$P_{XY}(x,y) = \begin{cases} 1-p & x = y \\ p & x \neq y \end{cases} \quad \text{and } Q_{XY}(x,y) = \frac{1}{2} \cdot \frac{1}{2}$$

Ex. 2:

$$\begin{aligned} X^n &= (0,1,0,1,1,1,0,1,0,1,1,0,1,0,0,1,1,0,0) \\ Y^n &= (1,0,0,1,0,1,0,0,0,1,0,1,1,1,1,1,0,1,0) \end{aligned}$$

$\mathrm{tp}\,(X^n) = P_X$ and $\mathrm{tp}\,(Y^n) = P_Y \rightarrow$ decision center decides $\hat{\mathcal{H}} = 0$

Example of Doubly-Symmetric Binary Sources

$$P_{XY}(x,y) = \begin{cases} 1-p & x = y \\ p & x \neq y \end{cases} \quad \text{and } Q_{XY}(x,y) = \frac{1}{2} \cdot \frac{1}{2}$$

Ex. 2:

$$\begin{aligned} X^n &= (0,1,0,1,1,1,0,1,0,1,1,0,1,0,0,1,1,0,0) \\ Y^n &= (1,0,0,1,0,1,0,0,0,1,0,1,1,1,1,1,0,1,0) \end{aligned}$$

$\text{tp}\,(X^n) = P_X$ and $\text{tp}\,(Y^n) = P_Y \rightarrow$ decision center decides $\hat{\mathcal{H}} = 0$

For centralized setting ($R = \infty$), decision center decides $\hat{\mathcal{H}} = 1$ for Ex. 2!

Analysis of 1-bit Communication Scheme

- Probability of false alarm

$$\alpha_n = P_{XY}^{\otimes n}\Big(\mathrm{tp}\,(X^n) \approx P_X \quad \text{and} \quad \mathrm{tp}\,(Y^n) \approx P_Y\Big) \to 1 \quad \text{as} \quad n \to \infty$$

by the weak law of large numbers

- Probability of miss detection:

$$\begin{aligned}
\beta_n &= Q_{XY}^{\otimes n}\Big(\mathrm{tp}\,(X^n) \approx P_X \quad \text{and} \quad \mathrm{tp}\,(Y^n) \approx P_Y\Big) \\
&= \sum_{\substack{\pi_{xy}\,:\,\pi_x \approx P_X \\ \pi_y \approx P_Y}} Q_{XY}^{\otimes n}\Big(\mathrm{tp}\,(X^n, Y^n) = \pi_{xy}\Big) \\
&\approx \exp\Big(-n \cdot \big(\min_{\substack{\pi_{xy}\,:\,\pi_x \approx P_X \\ \pi_y \approx P_Y}} D(\pi_{xy} || Q_{XY})\big)\Big)
\end{aligned}$$

Many-Sensors and One Detector

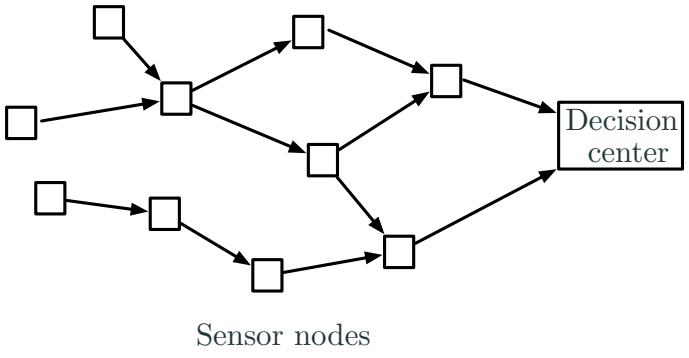

- <u>"Normal situation" $\mathcal{H} = 0$:</u> $(X_1^n, \ldots, X_K^n, Y^n) \sim$ i.i.d. $P_{X_1 \cdots X_K Y}$
- <u>"Hazardous event" $\mathcal{H} = 1$:</u> $(X_1^n, \ldots, X_K^n, Y^n) \sim$ i.i.d. $Q_{X_1 \cdots X_K Y}$

Many-Sensors and One Detector

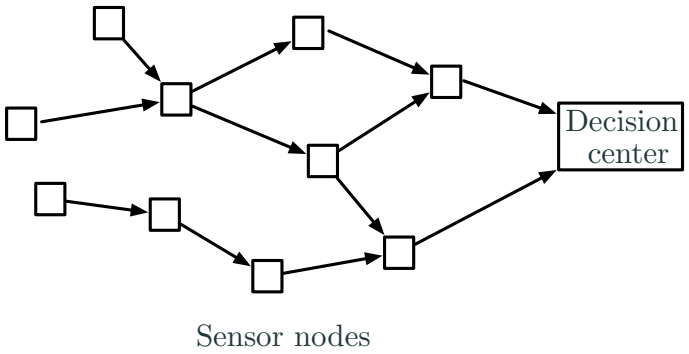

- Each sensor k produces local decision
- Unanimous decision forwarding: sensor sends $M_k = 0$ only if all incoming messages 0 and local decision $\mathcal{H} = 0$
- Decision center: raises alarm <u>unless</u> all incoming messages 0 and local decision $\mathcal{H} = 0$
- Optimal exponent

$$\theta^\star = \min_{\substack{\pi_{X_1 \cdots X_K Y}: \\ \pi_{X_k} = P_{X_k},\ \forall k \\ \pi_Y = P_Y}} D(\pi_{X_1 \cdots X_K Y} || Q_{X_1 \cdots X_K Y})$$

When is a single-bit transmission optimal for $R = 0$?

- Single-bit transmission (unanimous decision forward) optimal if
  - Two hypotheses $\mathcal{H} = 0$ and $\mathcal{H} = 1$
  - All decision centers interested in same exponent
  - Interactive communication allowed [Katz-Piantanida-Debbah-2016]
- Sending a single bit is not sufficient if
  - more than $K > 2$ hypotheses ; or
  - Different decision centers interested in different exponents

Concurrent Detection [Escamilla-W.-Zaidi-2018]

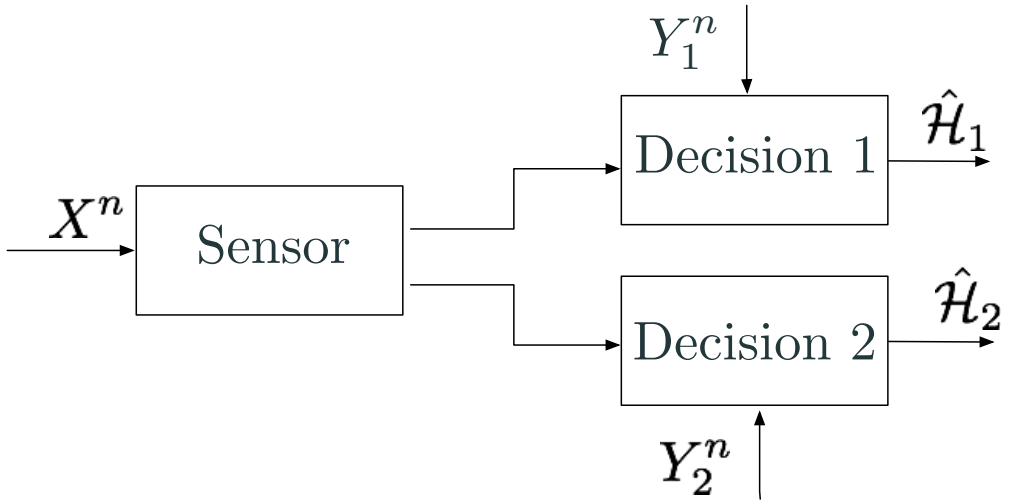

$$\Pr[\hat{\mathcal{H}}_1 = 1 | \mathcal{H} = 0] < 2^{-n\theta_1}$$

$$\Pr[\hat{\mathcal{H}}_2 = 0 | \mathcal{H} = 1] < 2^{-n\theta_2}$$

- With $M \in \{-1, 0, 1\}$ do the following:
  - If tp $(X^n) \approx P_X \rightarrow$ send $M = 0$
  - If tp $(X^n) \approx Q_X \rightarrow$ send $M = 1$
  - Else send $M = -1$
- Each decision center recovers its optimal standalone information

No tradeoff between decision centers !

Concurrent Detection [Escamilla-W.-Zaidi-2018]

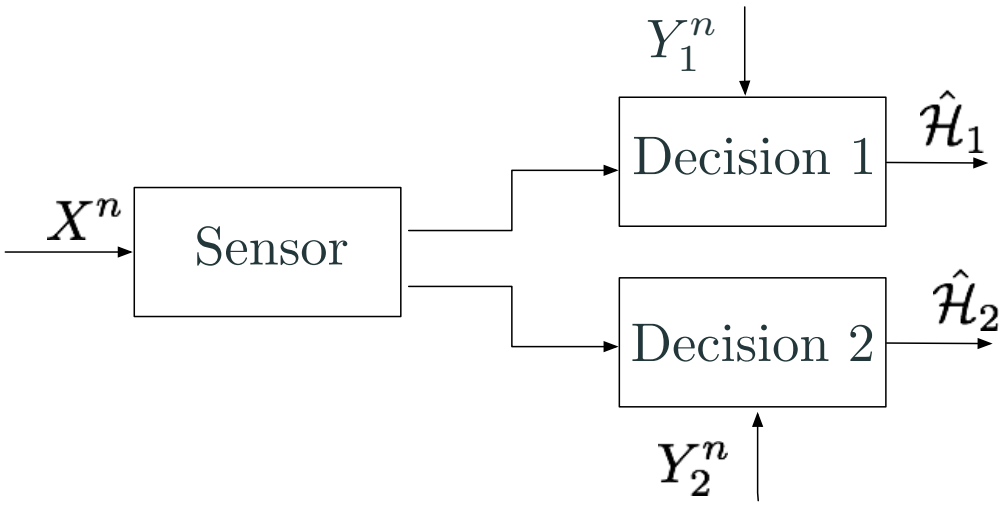

$$\Pr[\hat{\mathcal{H}}_1 = 1 | \mathcal{H} = 0] < 2^{-n\theta_1}$$

$$\Pr[\hat{\mathcal{H}}_2 = 0 | \mathcal{H} = 1] < 2^{-n\theta_2}$$

- With $M \in \{0, 1\}$:
  $\rightarrow$ How to associate types to messages 0 and 1?

Tradeoff between decision centers !

Concurrent Detection with a single bit

- Set of types of X^n partitioned into $|M|$ sets

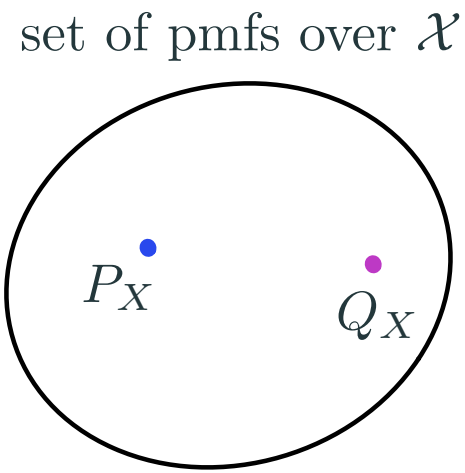

Concurrent Detection with a single bit

- Set of types of X^n partitioned into $|M|$ sets
- Optimal partitioning for $|M| = 3$:

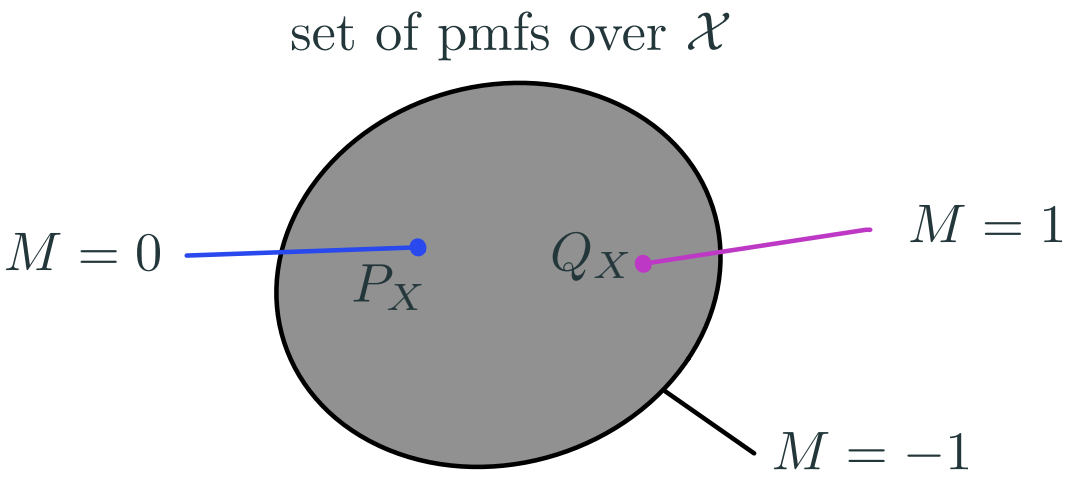

Concurrent Detection with a single bit

- Set of types of X^n partitioned into $|M|$ sets
- Two partitionings possible for $|M| = 2$: 1. separate P_X and Q_X

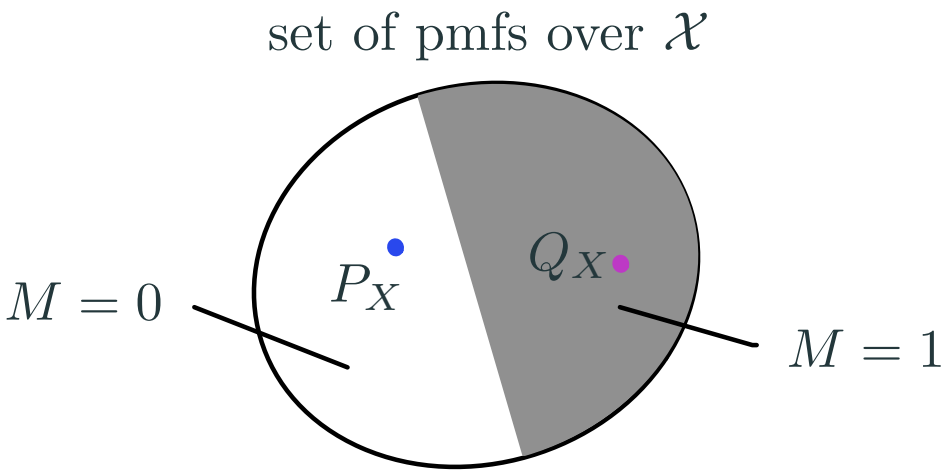

- Decision center 1: $\hat{\mathcal{H}}_1 = 1$ only if $M = 1$ and $\mathrm{tp}\,(Y_1^n) \approx Q_{Y_1}$
- Decision center 2: $\hat{\mathcal{H}}_2 = 0$ only if $M = 0$ and $\mathrm{tp}\,(Y_2^n) \approx P_{Y_2}$

Concurrent Detection with a single bit

- Set of types of X^n partitioned into $|M|$ sets
- Two partitionings possible for $|M| = 2$: 2. join P_X and Q_X

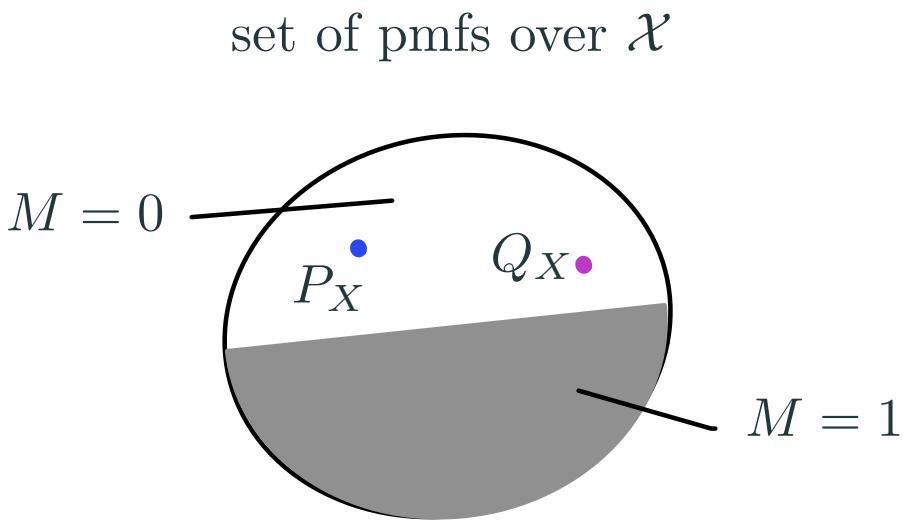

- Decision center 1: $\hat{\mathcal{H}}_1 = 1$ only if $M = 0$ and $\mathrm{tp}\,(Y_1^n) \approx Q_{Y_1}$
- Decision center 2: $\hat{\mathcal{H}}_2 = 0$ only if $M = 0$ and $\mathrm{tp}\,(Y_2^n) \approx P_{Y_2}$

Example of Concurrent Detection

A binary example with 1-bit communication

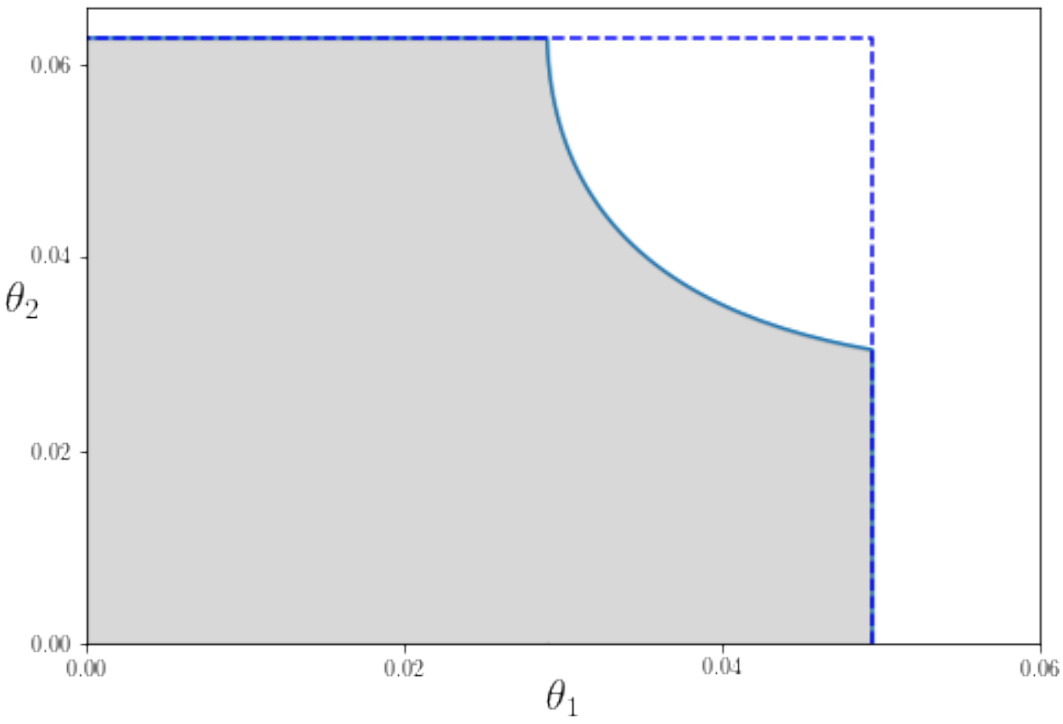

Distributed Hypothesis Testing under Positive Rates $R > 0$

Distributed Hypothesis Testing with $R > 0$ (Han'87)

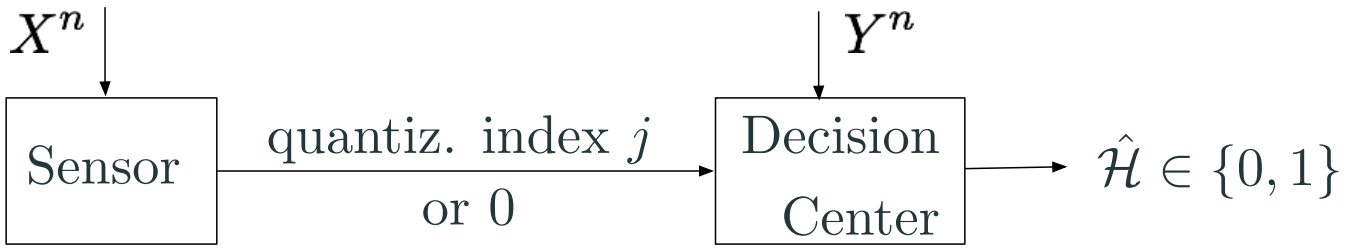

- Quantize X^n to $S^n(j)$ with $j \in \{1, \ldots, 2^{nR}\}$
- if $\exists j$ s.t. $\mathrm{tp}\,(S^n(j), X^n) \approx P_{S,X} \to$ send $M = j$, else $M = -1$
- Decision center raises alarm $\hat{\mathcal{H}} = 1$ unless

$$M > 1 \quad \underline{\text{and}} \quad \mathrm{tp}\,(S^n(M), Y^n) \approx P_{S,Y}.$$

- Achievable exponent

$$\theta^\star(R) \geq \max_{\substack{P_{S|X}: \\ R \geq I(S;X)}} \min_{\substack{\pi_{SXY}: \\ \pi_{SX} = P_{SX} \\ \pi_{SY} = P_{SY}}} D(\pi_{SXY} || P_{S|X} Q_{XY})$$

Testing Against Independence (Csiszar-Ahlswede '86)

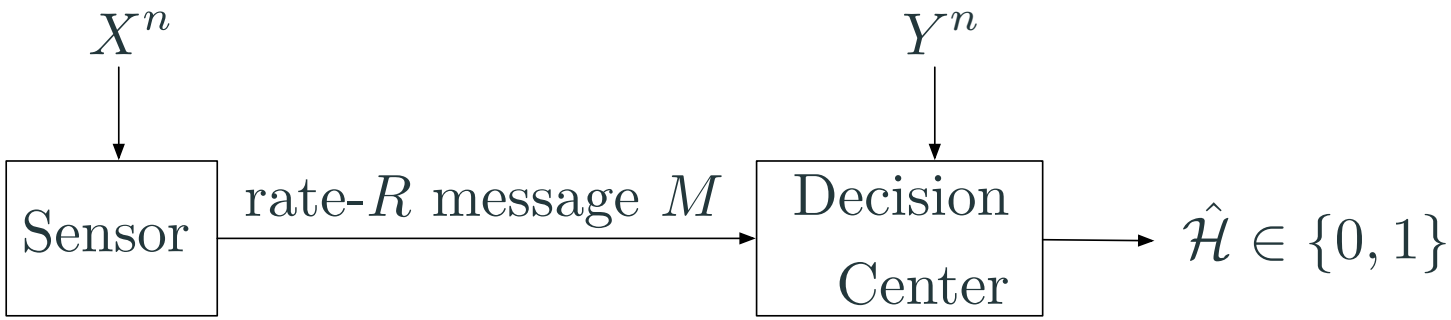

- $\mathcal{H} = 0$: $(X^n, Y^n) \sim$ i.i.d. P_{XY}
- $\mathcal{H} = 1$: $(X^n, Y^n) \sim$ i.i.d. $P_X P_Y$

Optimal Rate-Exponent Tradeoff

$$\theta^\star(R) = \max_{\substack{P_{S|X}: \\ R \geq I(S;X)}} I(S; Y)$$

Using Wyner-Ziv Compression (Shimokawa, Han, Amari'94)

- Rx has side-info. Y^n about source X^n
- Wyner-Ziv coding: send a list of possible quantization indices $\rightarrow$ Rx decodes the correct quantization index using Y^n
- Rx decodes with minimum empirical-entropy decoder (a universal capacity-achieving decoder)

$$\theta^\star(R) \geq \max_{\substack{P_{S|X}: \\ R \geq I(S;X|Y)}} \min \left\{ \min_{\substack{\pi_{SXY}: \\ \pi_{SX}=P_{SX} \\ \pi_{SY}=P_{SY}}} D(\pi_{SXY} \| P_{S|X} Q_{XY}), \right.$$

$$\left. \min_{\substack{\pi_{SXY}: \\ \pi_{SX}=P_{SX} \\ \pi_Y=P_Y \\ H(S|Y) \leq H_{\pi_{SY}}(S|Y)}} D(\pi_{SXY} \| P_{S|X} Q_{XY}) + R - I(S;X|Y) \right\}$$

Extensions to other Scenarios

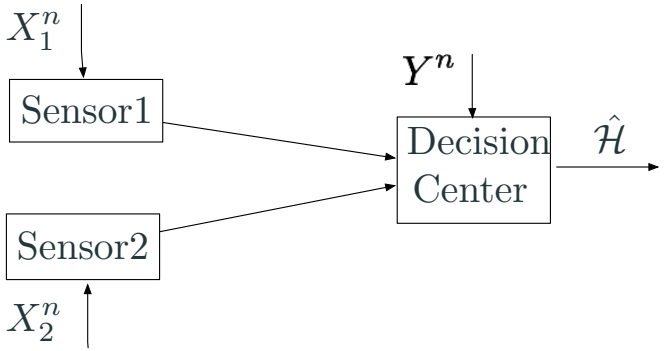

Many-to-One

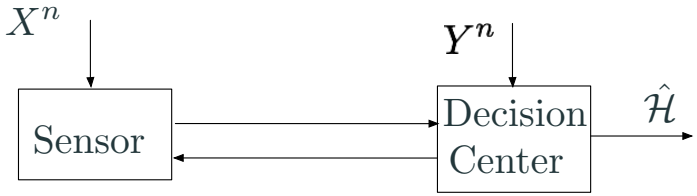

Interactive Communication

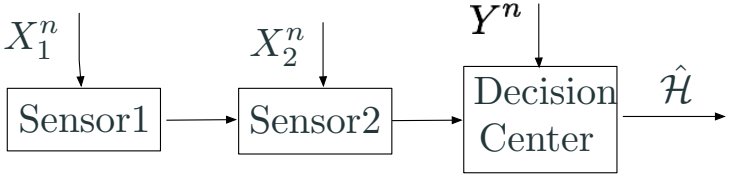

Multi-hop Communication

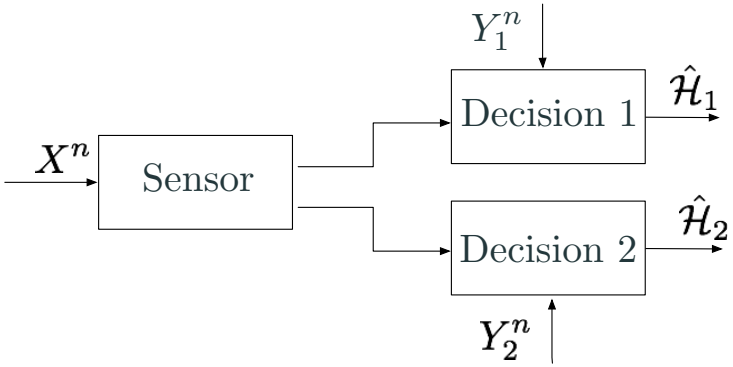

One-to-Many

Concurrent Detection under $P_X = Q_X$

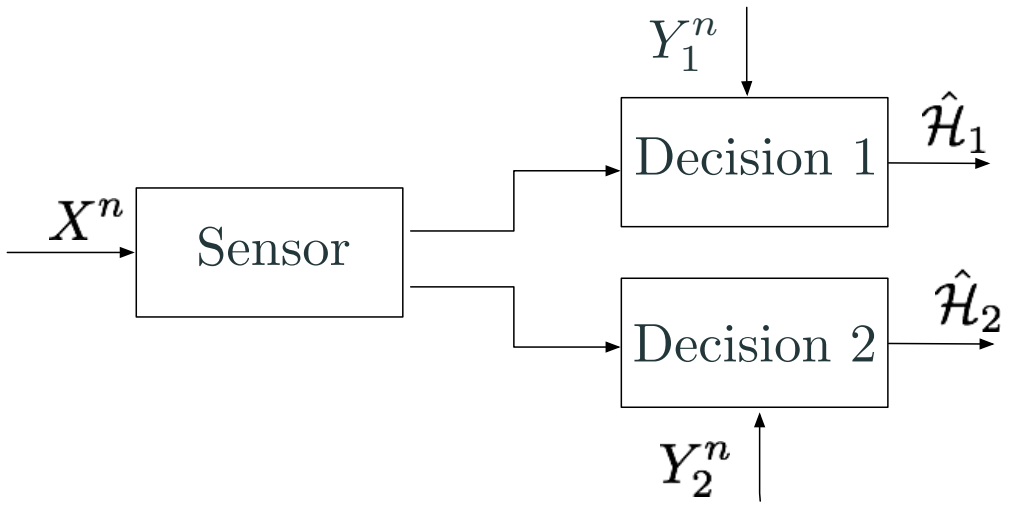

$$\Pr[\hat{\mathcal{H}}_1 = 1 | \mathcal{H} = 0] < 2^{-n\theta_1}$$

$$\Pr[\hat{\mathcal{H}}_2 = 0 | \mathcal{H} = 1] < 2^{-n\theta_2}$$

- Apply Quantization-and-Test Scheme
- Tradeoff in quantization: cannot adapt to both receivers

An example with Gaussian sources where $P_X \neq Q_X$

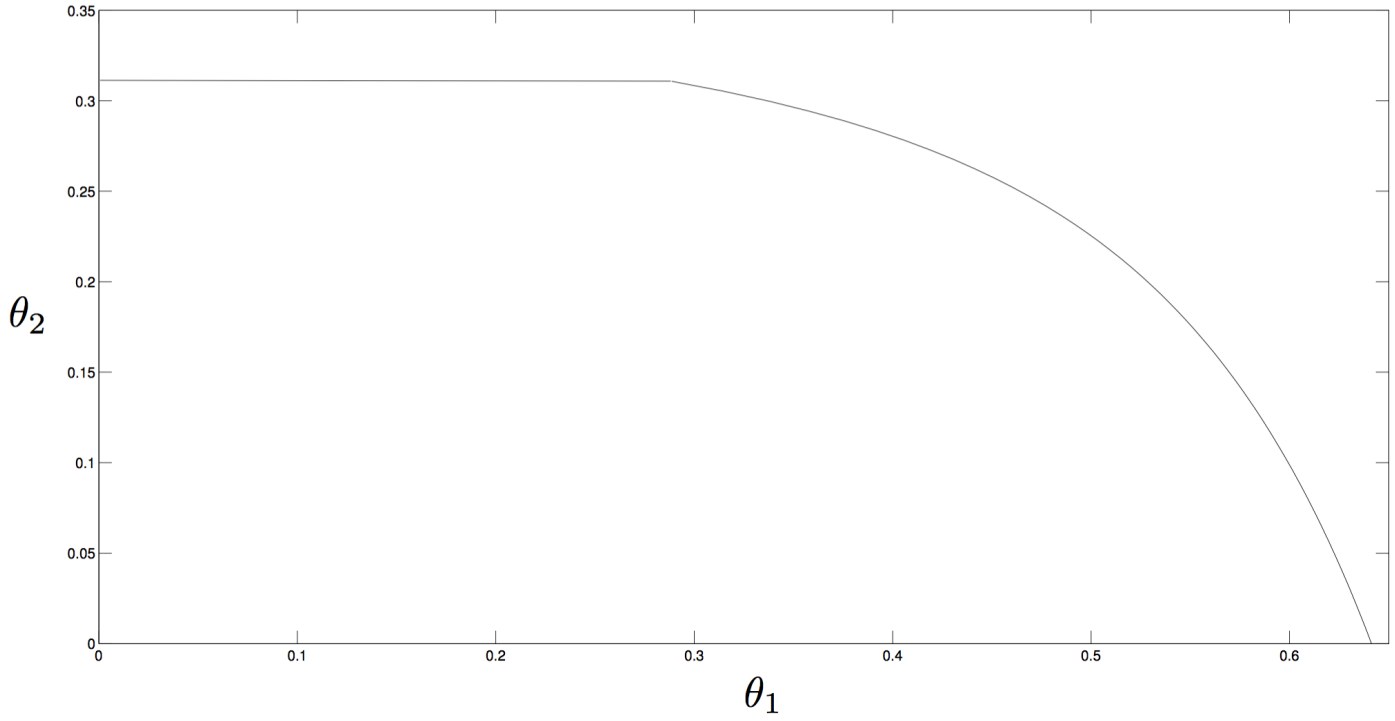

$\rightarrow$ tradeoff in exponents

Concurrent Detection where $P_X \neq Q_X$

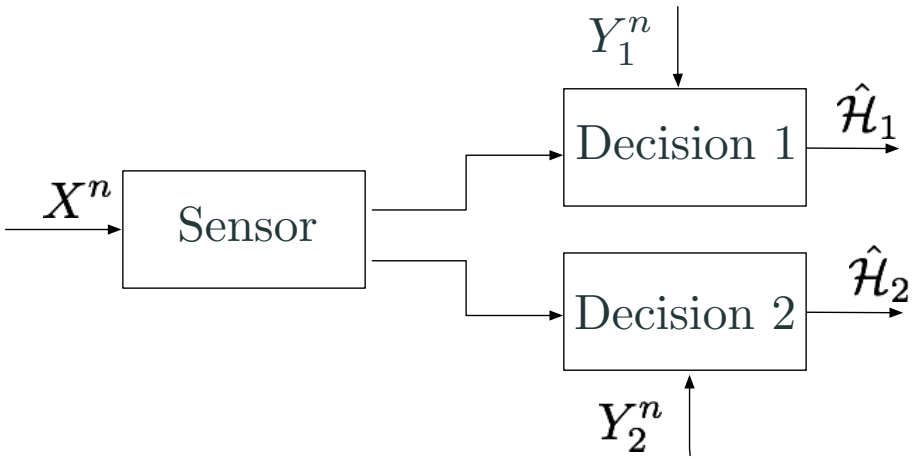

$\Pr[\hat{\mathcal{H}}_1 = 1 | \mathcal{H} = 0] < 2^{-n\theta_1}$

$\Pr[\hat{\mathcal{H}}_2 = 0 | \mathcal{H} = 1] < 2^{-n\theta_2}$

- Sensor:
  - Tentative guess $\tilde{\mathcal{H}} = 0$ or $\tilde{\mathcal{H}} = 1$
  - Quantize for dec. center 1 if $\tilde{\mathcal{H}} = 1$ and for dec. center 2 if $\tilde{\mathcal{H}} = 0$
  - Send guess $\tilde{\mathcal{H}}$ *and* quantization info
- Dec. center 1: if $\tilde{\mathcal{H}} = 0$, set $\hat{\mathcal{H}}_1 = 0$, else perform local test
- Dec. center 2: if $\tilde{\mathcal{H}} = 1$, set $\hat{\mathcal{H}}_2 = 1$ else perform local test

$\rightarrow$ No tradeoff in exponents

Testing over Noisy Channels

Distributed Testing over Noisy Channels

- Discrete memoryless channel $P_{V|W}$

Naive Coding and Testing Scheme for Noisy Channels

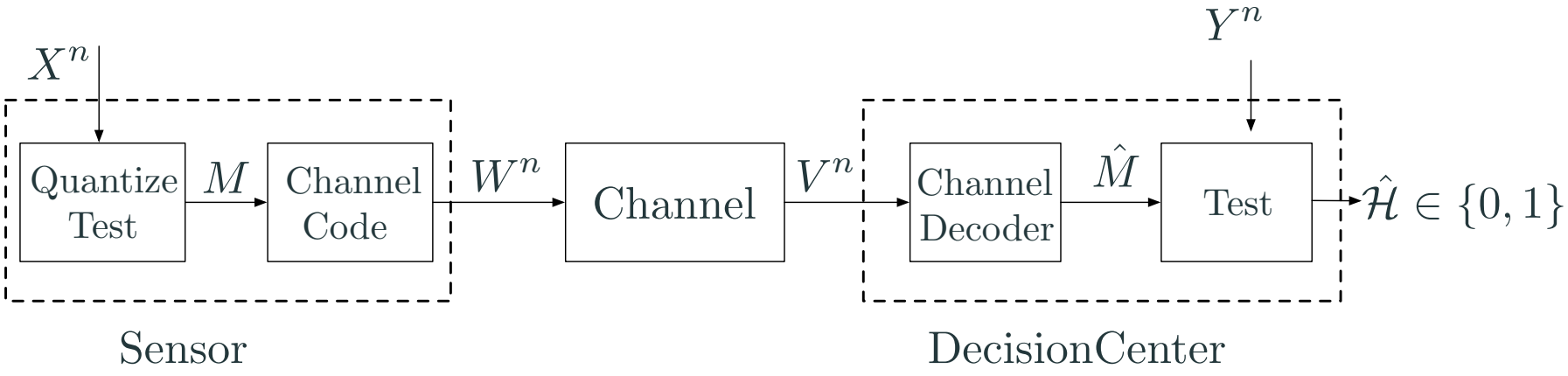

- "Quantize and test" with lists (Wyner-Ziv) $\rightarrow$ Message M
- Use standard codebook $\mathcal{C}_W = \{W^n(-1), W^n(1), \ldots, W^n(2^{nR})\}$ to transmit M
- New error events related to erroneous decoding of M, for $M = -1$ and for $M \in \{1, \ldots, 2^{nR}\}$

Achievable Exponent with Naive Scheme

$$\theta^\star \geq \max_{\substack{P_{S|X}: \\ I(S;X|Y)\leq C}} \min\left\{\theta_{\text{standard}}, \theta_{\text{wrong-dec.}}, \theta_{\text{miss-1}}\right\},$$

where

$$\theta_{\text{standard}} = \min_{\substack{\pi_{SXY}: \\ \pi_{SX}=P_{SX} \\ \pi_{SY}=P_{SY}}} D(\pi_{SXY}||Q_{XY}P_{S|X}),$$

$$\theta_{\text{wrong-dec.}} = \min_{\substack{\pi_{SXY}: \\ \pi_{SX}=P_{SX} \\ \pi_{Y}=P_{Y} \\ H(S|Y)\leq H_\pi(S|Y)}} D(\pi_{SXY}||P_{S|X}Q_{XY}) + C - I(S;X|Y),$$

$$\theta_{\text{miss}-1} = D(P_Y||Q_Y) + C - I(S;X|Y)$$

Achievable Exponent with Naive Scheme

$$\theta^\star \geq \max_{\substack{P_{S|X}: \\ I(S;X|Y)\leq C}} \min\left\{\theta_{\text{standard}}, \theta_{\text{wrong-dec.}}, \theta_{\text{miss-1}}\right\},$$

where

$$\theta_{\text{standard}} = \min_{\substack{\pi_{SXY}: \\ \pi_{SX}=P_{SX} \\ \pi_{SY}=P_{SY}}} D(\pi_{SXY}||Q_{XY}P_{S|X}),$$

$$\theta_{\text{miss}-1} = D(P_Y||Q_Y) + C - I(S;X|Y)$$

- Good when C large or when $P_{X|Y} \approx Q_{X|Y}$
- Optimal in some cases [Sreekuma/Gündüz-2017]
- $\theta_{\text{missed}-1}$ penalizing! Robustify communication of $M = -1$!

Our Coding and Testing Scheme for Noisy Channels

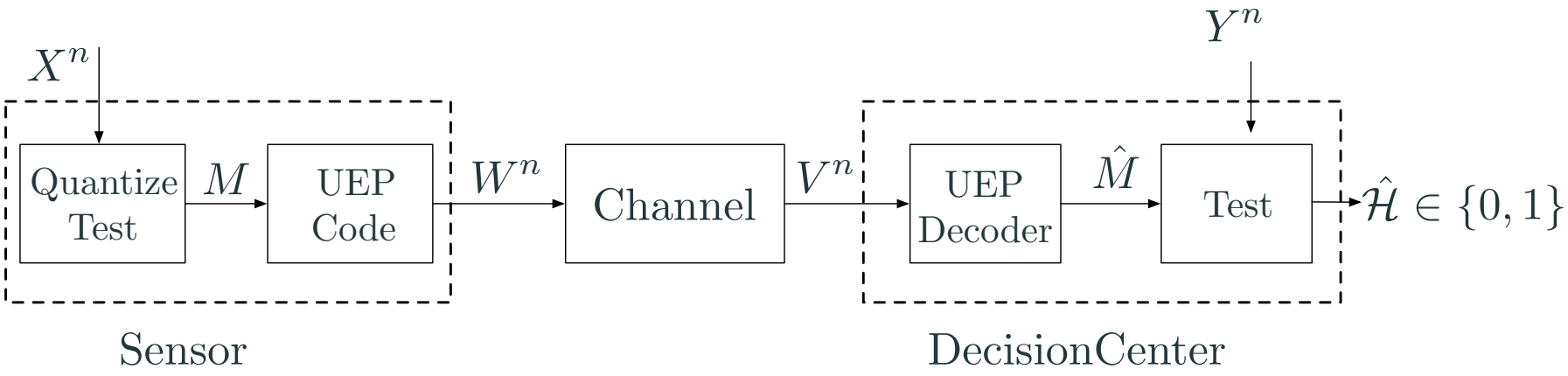

- "Quantize and test" with lists (Wyner-Ziv)
- *Unequal error protection* code protects $M = -1$ (Borade'08)
  - Send t^n if $M = -1$
  - Use codebook $\mathcal{C}_W = \{W^n(1), \ldots, W^n(2^{n(R)})\}$ if $M > 1$

Result on Testing over Noisy Channels

Achievable Exponent (Salehkalaibar&W'2017)

$$\theta^\star \geq \max_{\substack{P_{S|X}, P_{TW}: \\ I(S;X|Y) \leq I(W;V|T)}} \min\left\{\theta_{\text{standard}}, \theta_{\text{wrong-dec.}}, \theta_{\text{missed-0}}\right\},$$

$$\theta_{\text{standard}} = \min_{\substack{\pi_{SXY}: \\ \pi_{SX}=P_{SX} \\ \pi_{SY}=P_{SY}}} D(\pi_{SXY}||Q_{XY}P_{S|X}),$$

$$\theta_{\text{wrong-dec.}} = \min_{\substack{\pi_{SXY}: \\ \pi_{SX}=P_{SX} \\ \pi_{Y}=P_{Y} \\ H(S|Y) \leq H_\pi(S|Y)}} D(\pi_{SXY}||P_{S|X}Q_{XY}) + I(W;V|T) - I(S;X|Y),$$

$$\theta_{\text{missed-0}} = D(P_Y||Q_Y) + I(W;V|T) - I(S;X|Y) + \mathrm{E}_T[D(P_{V|T}||P_{V|W=T})]$$

Replace capacity C by $I(W;V|T)$

Example 1: DSBS and a BSC

- Sources:

$$\mathcal{H} = 0: \qquad X \sim \text{Bern}(p_0), \qquad Y = X \oplus N_0, \qquad N_0 \sim \text{Bern}(q_0),$$

$$\mathcal{H} = 1: \qquad X \sim \text{Bern}(p_1), \qquad Y \sim \text{Bern}(p_0 \star q_0) \quad \text{independent}$$

- BSC with cross-over prob. $r \in [0, 1/2]$.
- Achievable exponents for $p_0 = 0.2$, $p_1 = 0.4$, and $q_0 = 0.3$:

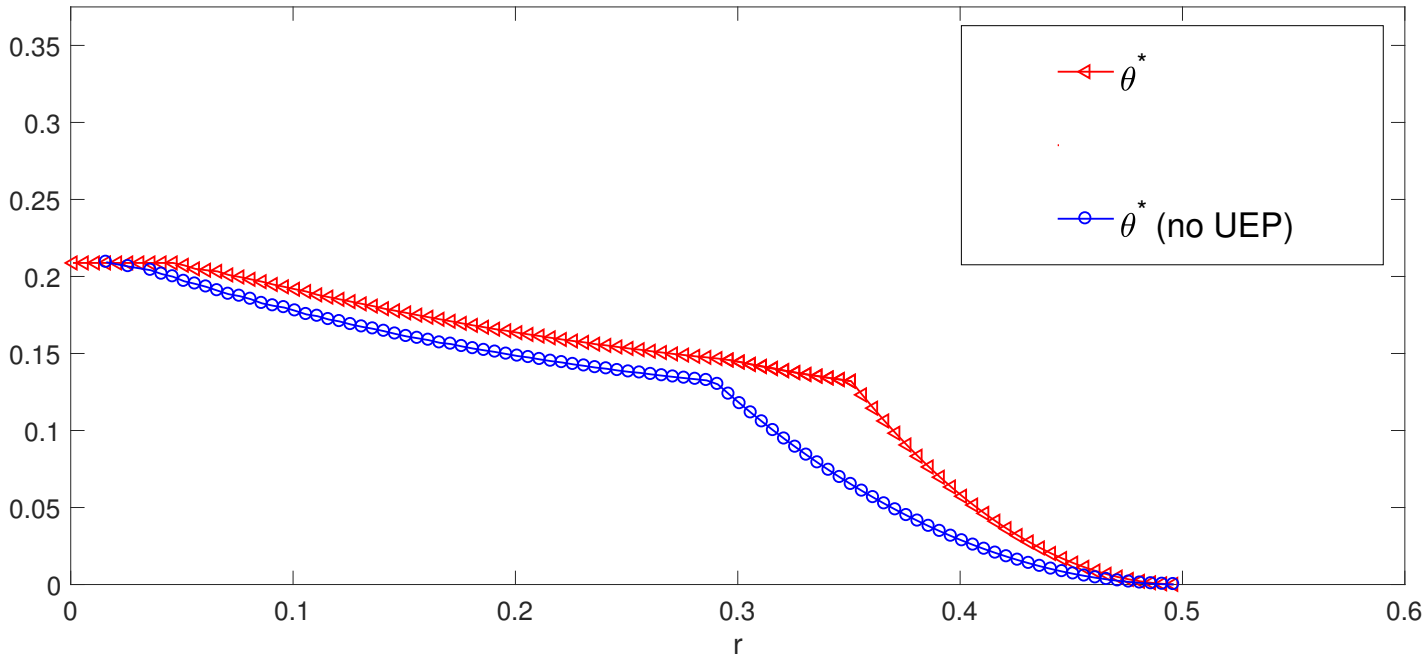

Example 2: Gaussian Testing against Independence

$$\mathbf{K}^0_{XY} = \begin{bmatrix} 1 & \rho_0 \\ \rho_0 & 1 \end{bmatrix} \qquad \text{and} \qquad \mathbf{K}^1_{XY} = \begin{bmatrix} 1 & 0 \\ 0 & 1 \end{bmatrix}.$$

$$\begin{aligned} \mathcal{H} = 0: &\qquad (X, Y) \sim \mathcal{N}(0, \mathbf{K}^0_{XY}) \\ \mathcal{H} = 1: &\qquad (X, Y) \sim \mathcal{N}(0, \mathbf{K}^1_{XY}) \end{aligned}$$

$$\theta^\star = \frac{1}{2} \log \left(\frac{1}{1 - \rho_0^2 + \rho_0^2 \cdot 2^{-2C}} \right).$$

$\theta^\star$ only depends on capacity C of DMC!

Testing over Multi-Access Channels

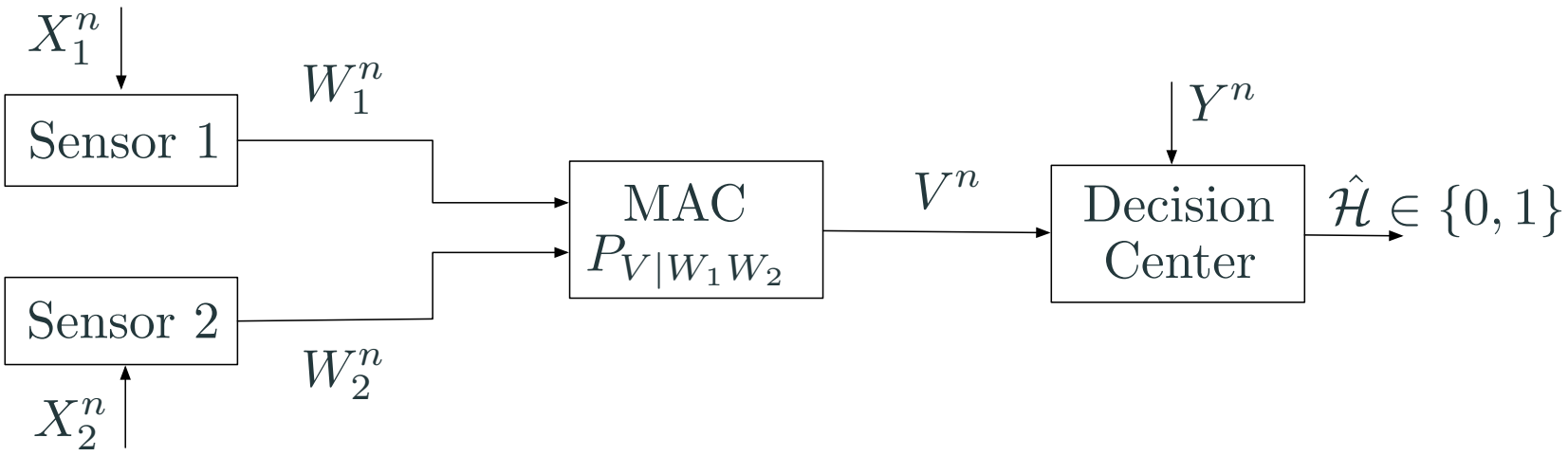

- $\underline{\mathcal{H}=0}$: $(X_1^n, X_2^n, Y^n) \sim$ i.i.d. $P_{X_1X_2Y}$
- $\underline{\mathcal{H}=1}$: $(X_1^n, X_2^n, Y^n) \sim$ i.i.d. $Q_{X_1X_2Y}$

- False alarm: $\alpha_n = \mathbb{P}\big[\hat{\mathcal{H}}=1|\mathcal{H}=0\big] < \epsilon$
- Miss detection: $\beta_n = \mathbb{P}\big[\hat{\mathcal{H}}=0|\mathcal{H}=1\big] < 2^{-n\theta}$

Our Coding and Testing Scheme for MACs

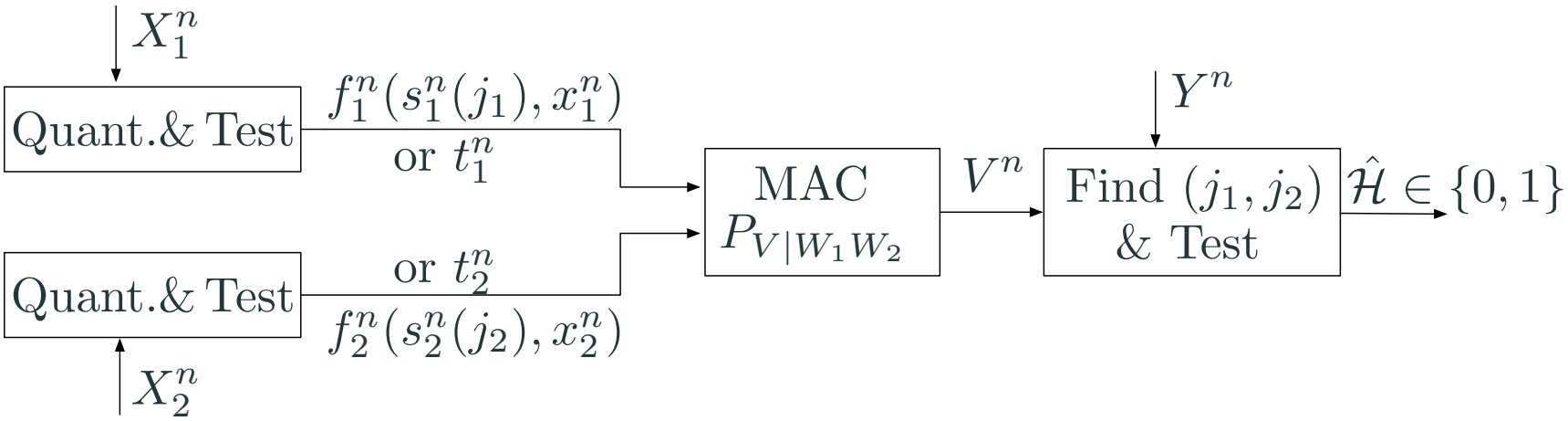

- Sensors: hybrid coding and UEP to report failure
- Decision center:
  - Finds j_1^*, j_2^* using hybrid <u>and</u> min. conditional entropy decoder
  - Declares $\hat{\mathcal{H}} = 0$ only if encoding & decoding successful

$\rightarrow$ optimal in some cases, sometimes separation is optimal

A Gaussian Example with Correlated Sources

- Standard Gaussian sources (X_1, X_2) with correlation $\rho = 0.8$

$$\mathcal{H} = 0: \qquad Y = X_1 + X_2 + N_0, \qquad N_0 \sim \mathcal{N}(0,1)$$

$$\mathcal{H} = 1: \qquad Y \sim \mathcal{N}(0, 1.5), \qquad \text{independent of } (X_1, X_2)$$

- Standard Gaussian MAC with power P
- Bounds on $\theta^\star$ in function of P

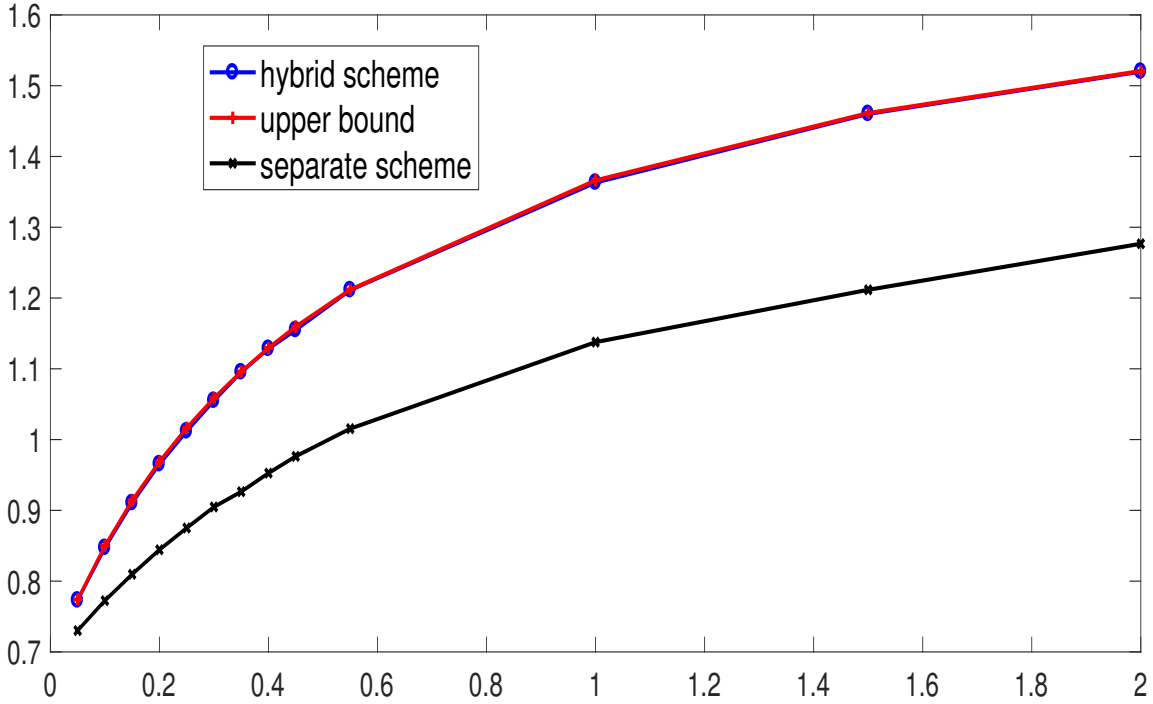

Summary

- Hypothesis testing over noisy networks
- Schemes based on distributed quantization, unanimous-decision forwarding, and unequal error protection
  - Accumulation of error exponents
  - Competition for network resources $\rightarrow$ tradeoff in exponents
  - Intermediate processing required for optimal communication
- Exponents optimal for some testing against cond. independence