When Feedback Doubles the Prelog in AWGN Networks

Michael Gastpar, Amos Lapidoth, Michèle Wigger

arXiv:1003.6082v1 [cs.IT] 31 Mar 2010

***Abstract*—We demonstrate that the sum-rate capacity of a memoryless Gaussian network at high signal-to-signal ratio (SNR) can be asymptotically doubled when feedback is available. To demonstrate this phenomenon we study two networks: the one-to-two scalar Gaussian broadcast channel (BC) and the two-to-two scalar Gaussian interference channel (IC).**

For the broadcast channel we show that if the noise sequences experienced by the two receivers are anticorrelated, then, at high SNR, feedback doubles the sum-rate capacity. However, this result no longer holds if the feedback is noisy.

For the interference channel we show that if the cross gain is positive and if the noises experienced by the two receivers are anticorrelated and of the same variance, then feedback doubles the high SNR sum-rate capacity.

I. Introduction

Feedback appears to provide only modest capacity gains in memoryless networks. This has been conjectured in [1] and confirmed for many concrete cases. In this paper we show two networks for which this is not the case. In these networks the capacity gains afforded by feedback tend to infinity as the signal-to-noise ratio (SNR) tends to infinity. The networks we consider are the real, scalar, additive white Gaussian noise (AWGN) broadcast channel (BC) with noise-free or noisy feedback and the symmetric, real, scalar, AWGN interference channel (IC) with noise-free one-sided feedback.

In the scalar AWGN BC a transmitter with a single transmit antenna wishes to simultaneously communicate to two different receivers, each equipped with a single receive antenna. Each receiver observes the signal sent by the transmitter corrupted by its individual AWGN sequence. We show that when the two individual AWGN sequences are *anticorrelated*—or sufficiently close to anticorrelated—then at high SNR noise-free feedback approximately doubles the sum-capacity from $\frac{1}{2}\log(1+\mathrm{SNR})$ to approximately $2\cdot\frac{1}{2}\log(1+\mathrm{SNR})$. Thus, with noise-free feedback the transmitter can communicate to the two receivers at similar rates as if it was communicating over two separate AWGN channels. This results demonstrates that with noise-free feedback the *prelog*[1] (the factor in the sum-capacity high-SNR expansion in front of $\frac{1}{2}\log(1+\mathrm{SNR})$) can exceed the number of transmit antennas. This result is very different from the result of Algoet&Cioffi [2], which states that when the received signals are corrupted by *independent* AWGN sequences the prelog of an AWGN network (with or without feedback) cannot exceed the number of transmit or receive antennas.

The achievability of a prelog of two for the scalar AWGN BC with anticorrelated noises is based on a coding scheme proposed by Ozarow&Leung [3], [4]. Our main contribution lies in our (possibly suboptimal) choice of the scheme's parameter, a choice that leads to an easier characterization of the scheme's performance, and in analyzing this performance in the asymptotic high-SNR regime. Our choice of the scheme's parameter reduces the task of finding the solutions to a sixth-order equation as in [3], [4], [5] to the task of finding the solutions to a cubic equation.

We also consider the AWGN BC with *noisy* feedback where the feedback links are corrupted by independent AWGN sequences. We show that—irrespective of the positive feedback-noise variances and of the correlation of the forward noise-sequences—the prelog of this setup equals one (as in the absence of feedback). Thus, the prelog of two decreases to one as soon as the feedback is noisy. The proof of this result is based on a genie argument inspired by the work of Kim, Lapidoth, and Weissman [6].

The second network we consider is the symmetric scalar AWGN IC where each of two transmitters communicates with a different intended receiver. Each receiver observes a linear combination of the two transmitted signals corrupted by an individual AWGN sequence. We consider a setup with noise-free *one-sided* feedback where each transmitter observes feedback from its corresponding receiver. Our main result for this setup is that—as in the broadcast setup before—for anticorrelated noise sequences the prelog is two, as opposed to only 1 in the setup without feedback. Our achievability proof is based on the Schalkwijk-Kailath type scheme [7] proposed by Kramer in [8]. Previously, a prelog of two was known to be achievable for the scalar AWGN IC when the two transmitters (or the two receivers) could *fully* cooperate [9]. Our result shows that *partial* cooperation through feedback can be sufficient.

The paper is organized as follows. In Sections II–IV we present the channel models and the main results for the AWGN BC with noise-free feedback, the AWGN BC with noisy feedback, and the AWGN IC with noise-free feedback. In Sections V and VI we prove our results for the AWGN BC with noise-free feedback: in Section V the achievability

M.Gastpar is with the Department of Electrical Engineering and Computer Science at UC Berkeley, USA. Email: gastpar@eecs.berkeley.edu. A. Lapidoth is with the Departement of Information Technology and Electrical Engineering, ETH Zurich, Switzerland. Email:lapidoth@isi.ee.ethz.ch. M. Wigger was with the Departement of Information Technology and Electrical Engineering, ETH Zurich, Switzerland. She is now with the Communications and Electronics Departement at Telecom ParisTech, France. Email: michele.wigger@telecom-paristech.fr. Part of the results in this paper were presented at the ITA workshop 2008, at UC San Diego, USA, and at ISIT 2008, Toronto, Canada.

[1]The prelog is often also referred to as the *multiplexing gain* or *degrees of freedom*.

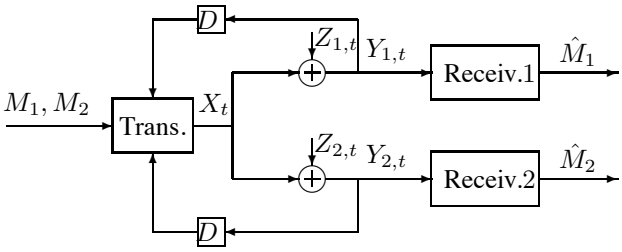

Fig. 1. The two-user AWGN BC with noise-free feedback.

of prelog 2 for anticorrelated noises and a more general achievability result for approximately anticorrelated noises; and in Section VI the rest of our results. In Section VII we prove our results for the AWGN BC with noisy feedback. In Sections VIII and IX we finally prove our results for the AWGN IC with noise-free one-sided feedback: in Section VIII the achievability of prelog 2 for anticorrelated noises; and in Section IX the rest of our results.

II. Broadcast Channel with Noise-Free Feedback

A. The Model

The real, scalar, AWGN BC with noise-free feedback is depicted in Figure 1. Denoting the time-t transmitted symbol by $x_t \in \mathbb{R}$, the symbol $Y_{1,t}$ that Receiver 1 receives at time-t is

$$Y_{1,t} = x_t + Z_{1,t}, \tag{1}$$

and the symbol $Y_{2,t}$ that Receiver 2 receives at time-t is

$$Y_{2,t} = x_t + Z_{2,t}, \tag{2}$$

where the sequence of pairs $\{(Z_{1,t}, Z_{2,t})\}$ is drawn independently and identically distributed (IID) according to a bivariate zero-mean Gaussian distribution of covariance matrix

$$\mathsf{K} = \begin{pmatrix} \sigma_1^2 & \rho_z \sigma_1 \sigma_2 \\ \rho_z \sigma_1 \sigma_2 & \sigma_2^2 \end{pmatrix}. \tag{3}$$

We assume that σ_1^2 and σ_2^2 are positive and refer to them as the noise variances and to $\rho_z \in [-1, 1]$ as the noise correlation coefficient.

The transmitter wishes to send Message M_1 to Receiver 1 and an independent message M_2 to Receiver 2. The messages M_1 and M_2 are assumed to be uniformly distributed over the sets $\mathcal{M}_1 \triangleq \{1, \ldots, \lfloor 2^{nR_1} \rfloor\}$ and $\mathcal{M}_2 \triangleq \{1, \ldots, \lfloor 2^{nR_2} \rfloor\}$, where n denotes the blocklength and R_1 and R_2 the respective rates of transmission.

It is assumed that the transmitter has access to noise-free feedback from both receivers, i.e., that after sending x_{t-1} it learns both outputs $Y_{1,t-1}$ and $Y_{2,t-1}$. The transmitter can thus compute its time-t channel input as a function of both messages and all previous channel outputs:

$$X_t = f_{\mathrm{BC},t}^{(n)}\left(M_1, M_2, Y_1^{t-1}, Y_2^{t-1}\right), \quad t \in \{1, \ldots, n\}, \tag{4}$$

where the encoding function $f_{\mathrm{BC},t}^{(n)}$ is of the form

$$f_{\mathrm{BC},t}^{(n)} \colon \mathcal{M}_1 \times \mathcal{M}_2 \times \mathbb{R}^{t-1} \times \mathbb{R}^{t-1} \to \mathbb{R} \tag{5}$$

and where $Y_1^{t-1} \triangleq (Y_{1,1}, \ldots, Y_{1,t-1})$ and $Y_2^{t-1} \triangleq (Y_{2,1}, \ldots, Y_{2,t-1})$.

The channel inputs are subject to an expected average block-power constraint $P > 0$. Thus, in (4) we only allow for encoding functions $\left\{f_{\mathrm{BC},t}^{(n)}\right\}_{t=1}^{n}$ that satisfy

$$\frac{1}{n}\mathsf{E}\left[\sum_{t=1}^{n}\left(f_t^{(n)}(M_1, M_2, Y_1^{t-1}, Y_2^{t-1})\right)^2\right] \le P. \tag{6}$$

After the n-th channel use each receiver decodes its intended message based on its observed channel output sequence. Receiver 1 produces the guess

$$\hat{M}_1 = \phi_1^{(n)}(Y_1^n), \tag{7}$$

and Receiver 2 the guess

$$\hat{M}_2 = \phi_2^{(n)}(Y_2^n), \tag{8}$$

where the decoding functions $\phi_1^{(n)}$ and $\phi_2^{(n)}$ are of the form

$$\phi_1^{(n)} \colon \mathbb{R}^n \to \{1, \ldots, \lfloor 2^{nR_1} \rfloor\}, \tag{9}$$

$$\phi_2^{(n)} \colon \mathbb{R}^n \to \{1, \ldots, \lfloor 2^{nR_2} \rfloor\}. \tag{10}$$

A rate pair (R_1, R_2) is said to be achievable if for every block-length n there exists a set of n encoding functions $\left\{f_{\mathrm{BC},t}^{(n)}\right\}_{t=1}^{n}$ as in (5) satisfying the power constraint (6) and two decoding functions $\phi_1^{(n)}$ and $\phi_2^{(n)}$ as in (9) and (10) such that the probability of decoding error $\Pr\left[(M_1, M_2) \neq (\hat{M}_1, \hat{M}_2)\right]$ tends to 0 as the blocklength n tends to infinity, i.e.,

$$\lim_{n\to\infty} \Pr\left[(M_1, M_2) \neq (\hat{M}_1, \hat{M}_2)\right] = 0.$$

The closure of the set of all achievable rate pairs (R_1, R_2) is called the *capacity region* of this setup. The supremum of the sum $R_1 + R_2$ over all achievable rate pairs (R_1, R_2) is called its *sum-capacity*, and we denote it by $C_{\mathrm{BC},\Sigma}(P, \sigma_1^2, \sigma_2^2, \rho_z)$. In this paper we are particularly interested in the *prelog*, which characterizes the logarithmic growth of the sum-capacity at high powers, and is defined as:

$$\varlimsup_{P\to\infty} \frac{C_{\mathrm{BC},\Sigma}(P, \sigma_1^2, \sigma_2^2, \rho_z)}{\frac{1}{2}\log(1+P)}. \tag{11}$$

B. Results

It is well known [10] that for the AWGN BC without feedback the prelog equals 1, irrespective of the noise-correlation ρ_z. The following Theorem 1 shows that with feedback the prelog can be 2.

Theorem 1:

- If $\rho_z = -1$, then

$$\varlimsup_{P\to\infty} \frac{C_{\mathrm{BC},\Sigma}(P, \sigma_1^2, \sigma_2^2, \rho_z)}{\frac{1}{2}\log(1+P)} = 2. \tag{12}$$

- If $\rho_z \in (-1, 1)$, then

$$\varlimsup_{P\to\infty} \frac{C_{\mathrm{BC},\Sigma}(P, \sigma_1^2, \sigma_2^2, \rho_z)}{\frac{1}{2}\log(1+P)} = 1. \tag{13}$$

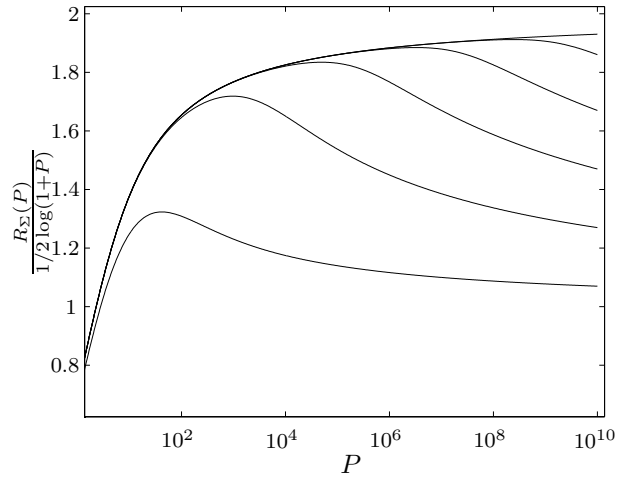

Fig. 2. Sum-rate achieved by the scheme in Section V as a function of the power $P > 0$, for noise variances $\sigma_1^2 = \sigma_2^2 = 1$ and various choices of the correlation coefficient ρ_z. In increasing order the curves correspond to the values $\rho_z = -0.9, -0.999, -0.99999, -0.9999999, -0.999999999, -1$.

- If $\rho_z = 1$, then

$$1 \leq \varlimsup_{P\to\infty} \frac{C_{\mathrm{BC},\Sigma}(P, \sigma_1^2, \sigma_2^2, \rho_z)}{\frac{1}{2}\log(1+P)} \leq 2. \tag{14}$$

Moreover, if the two noise variances σ_1^2 and σ_2^2 coincide, then

$$\varlimsup_{P\to\infty} \frac{C_{\mathrm{BC},\Sigma}(P, \sigma_1^2, \sigma_2^2, \rho_z)}{\frac{1}{2}\log(1+P)} = 1. \tag{15}$$

Proof: See Section VI-A ■

Note 1: Theorem 1 remains valid also when the transmitter has only one-sided feedback, i.e., when the transmitter for example only observes the outputs $\{Y_{1,t}\}$ but not $\{Y_{2,t}\}$.

Proof: See Section VI-C. ■

In Figure 2 we have plotted the relationship between the sum-rate that our scheme achieves and the transmitted power P for various values of the correlation ρ_z. It shows that for large P, feedback can nearly double the capacity if the correlation ρ_z is sufficiently close to -1. The following theorem and also Corollary 3 ahead explore the relationship between P and the required ρ_z. Since the required correlation depends on the transmit power P, we make the dependence explicit and denote the correlation by $\rho_z(P)$.

Theorem 2: Let $P > 0$ denote the transmitted power, and let $\rho_z(P) \in [-1, 1]$ denote the noise correlation. Define the limits

$$\alpha \triangleq \varlimsup_{P\to\infty} \frac{-\log(1 - |\rho_z(P)|)}{\log(P)}, \tag{16}$$

$$\beta \triangleq \varlimsup_{P\to\infty} \frac{-\log(1 + \rho_z(P))}{\log(P)}, \tag{17}$$

where $\log(0) = -\infty$. The sum-capacity of the AWGN BC with noise-free feedback satisfies the asymptotic upper bound

$$\varlimsup_{P\to\infty} \frac{C_{\mathrm{BC},\Sigma}(P, \sigma_1^2, \sigma_2^2, \rho_z(P))}{\frac{1}{2}\log(1+P)} \leq \min\{1+\alpha, 2\}; \tag{18}$$

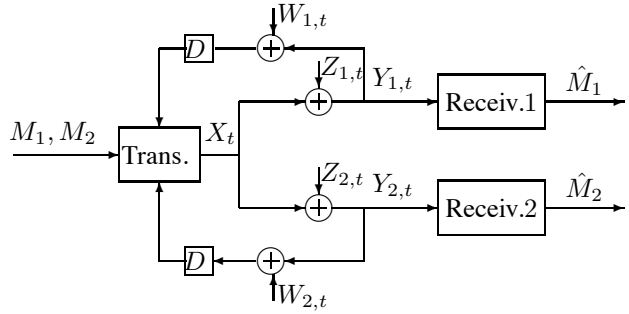

Fig. 3. The two-user AWGN BC with noisy feedback.

and the asymptotic lower bound

$$\varlimsup_{P\to\infty} \frac{C_{\mathrm{BC},\Sigma}(P, \sigma_1^2, \sigma_2^2, \rho_z(P))}{\frac{1}{2}\log(1+P)} \geq \min\{1+\beta, 2\}. \tag{19}$$

Proof: See Section VI-B. ■

Note 2: By considering the special case where $\rho_z(P)$ is a constant that does not depend on P we recover (12)–(14).

Corollary 3: If

$$\varlimsup_{P\to\infty} \rho_z(P) < 1, \tag{20}$$

then the right-hand sides of (16) and (17) coincide, and

$$\varlimsup_{P\to\infty} \frac{C_{\mathrm{BC},\Sigma}(P, \sigma_1^2, \sigma_2^2, \rho_z(P))}{\frac{1}{2}\log(1+P)} = \min\left\{1 + \varlimsup_{P\to\infty} \frac{-\log(1+\rho_z(P))}{\log(P)}, 2\right\}.$$

In particular, if

$$\rho_z(P) = -1 + \frac{\epsilon(P)}{P^\zeta}, \qquad \zeta \in [0,1],\ P > 1,$$

where

$$\lim_{P\to\infty} \frac{\log\big(\epsilon(P)\big)}{\log(P)} = 0,$$

then

$$\varlimsup_{P\to\infty} \frac{C_{\mathrm{BC},\Sigma}(P, \sigma_1^2, \sigma_2^2, \rho_z(P))}{\frac{1}{2}\log(1+P)} = 1 + \zeta. \tag{21}$$

III. Broadcast Channel with Noisy Feedback

A. The Model

In this section we study the AWGN BC with *noisy* feedback, which is depicted in Figure 3. The goal of the communication is the same as in the previous section. That is, the transmitter wishes to convey Message M_1 to Receiver 1 and Message M_2 to Receiver 2 by communicating over the AWGN BC described in (1) and (2). The transmitter has access to *noisy* feedback. Thus, instead of observing the channel outputs $Y_{1,t}$ and $Y_{2,t}$ as in the previous section, it observes the noisy feedback outputs

$$V_{1,t} = Y_{1,t} + W_{1,t},$$
$$V_{2,t} = Y_{2,t} + W_{2,t}.$$

The feedback-noise sequences $\{(W_{1,t}, W_{2,t})\}$ are assumed to be independent of the messages (M_1, M_2) and of the noise sequences on the forward path $\{(Z_{1,t}, Z_{2,t})\}$ and IID according to a zero-mean bivariate Gaussian distribution of

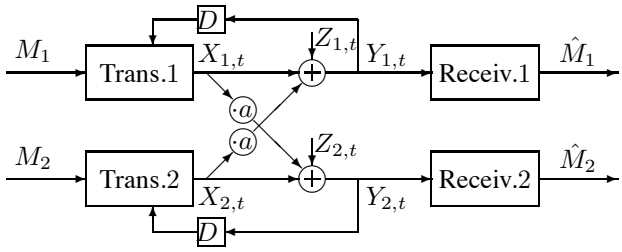

Fig. 4. The two-user AWGN IC with one-sided noise-free feedback.

diagonal[2] covariance matrix $\begin{pmatrix} \sigma_{W1}^2 & 0 \\ 0 & \sigma_{W2}^2 \end{pmatrix}$. We shall assume throughout that the feedback noise variances are positive

$$\sigma_{W1}, \sigma_{W2} > 0. \tag{22}$$

In this setup the transmitter computes its channel inputs as

$$X_t = f_{\text{BCNoisy},t}^{(n)}\left(M_1, M_2, V_1^{t-1}, V_2^{t-1}\right), \quad t \in \{1, \ldots, n\}, \tag{23}$$

where the encoding function $f_{\text{BCNoisy},t}^{(n)}$ is of the form

$$f_{\text{BCNoisy},t}^{(n)} \colon \mathcal{M}_1 \times \mathcal{M}_2 \times \mathbb{R}^{t-1} \times \mathbb{R}^{t-1} \to \mathbb{R}, \tag{24}$$

and where $V_1^{t-1} \triangleq (V_{1,1}, \ldots, V_{1,t-1})$ and $V_2^{t-1} \triangleq (V_{2,1}, \ldots, V_{2,t-1})$.

The channel input sequence is again subject to an expected average block-power constraint $P > 0$ as in (6).

The decoding rules, achievable rates, capacity region, sum-capacity and prelog are defined as in the previous section. The sum-capacity for this setup with noisy feedback is denoted by $C_{\text{BCNoisy},\Sigma}(P, \sigma_1^2, \sigma_2^2, \rho_z, \sigma_{W1}^2, \sigma_{W2}^2)$.

B. Result

Noisy feedback does not increase the prelog.

Theorem 4: Irrespective of the correlation $\rho_z \in [-1, 1]$, the prelog is one:

$$\overline{\lim_{P\to\infty}} \frac{C_{\text{BCNoisy},\Sigma}(P, \sigma_1^2, \sigma_2^2, \rho_z, \sigma_{W1}^2, \sigma_{W2}^2)}{\frac{1}{2}\log(1+P)} = 1.$$

Proof: See Section VII. ■

IV. Interference Channel with Noise-Free Feedback

The real scalar AWGN IC with noise-free feedback is depicted in Figure 4. Unlike the broadcast channel, this channel has two transmitters, each of which wishes to send a message to its corresponding receiver.

A. The Model

Transmitter 1 wishes to send Message M_1 to Receiver 1, and Transmitter 2 wishes to send Message M_2 to Receiver 2. The messages M_1 and M_2 are as defined previously. We assume a *symmetric channel*: if at time t Transmitter 1 sends the real symbol $x_{1,t}$ and Transmitter 2 sends the real symbol $x_{2,t}$, then Receiver 1 observes

$$Y_{1,t} = x_{1,t} + a x_{2,t} + Z_{1,t}, \tag{25}$$

and Receiver 2 observes

$$Y_{2,t} = a x_{1,t} + x_{2,t} + Z_{2,t}. \tag{26}$$

Here the "cross gain" a

$$a > 0, \tag{27}$$

is a positive, real constant and the noise sequences $\{(Z_{1,t}, Z_{2,t})\}$ are IID according to a zero-mean bivariate Gaussian distribution of symmetric covariance matrix $\mathsf{K} = \sigma^2 \begin{pmatrix} 1 & \rho_z \\ \rho_z & 1 \end{pmatrix}$.

Each transmitter has access to noise-free feedback from its corresponding receiver. Thus, each of the two transmitters computes its time-t channel input as

$$X_{\nu,t} = f_{\text{IC},\nu,t}^{(n)}\left(M_\nu, Y_\nu^{t-1}\right), \quad \nu \in \{1, 2\},$$

for some encoding functions $f_{\text{IC},\nu,t}^{(n)}$ of the form

$$f_{\text{IC},\nu,t}^{(n)} \colon \mathcal{M}_\nu \times \mathbb{R}^{t-1} \to \mathbb{R}, \quad \nu \in \{1, 2\}.$$

The two channel input sequences are subject to the same average block-power constraint $P > 0$:

$$\frac{1}{n}\mathsf{E}\left[\sum_{t=1}^{n}\left(f_{\text{IC},\nu,t}^{(n)}\left(M_\nu, Y_\nu^{t-1}\right)\right)^2\right] \le P, \quad \nu \in \{1, 2\}. \tag{28}$$

Decoding rules, achievable rate pairs, capacity region, sum-capacity, and prelog are defined as for the AWGN BC. We denote the sum-capacity of the symmetric AWGN IC by $C_{\text{IC},\Sigma}(P, \sigma^2, \rho_z, a)$.

In this paper, we do not consider negative cross gains, because the (feedback) capacity region of the symmetric AWGN IC with cross gain a, power constraints P, noise variance σ^2, and noise correlation ρ_z coincides with the (feedback) capacity region of the symmetric AWGN IC with cross gain $(-a)$, power constraints P, noise variance σ^2, and noise correlation $(-\rho_z)$. Indeed, in a symmetric AWGN IC with parameters a, P, σ^2, ρ_z Transmitter 2 and Receiver 2 (or Transmitter 1 and Receiver 1) can simulate an AWGN IC with parameters $(-a), P, \sigma^2, (-\rho_z)$. This is accomplished if Transmitter 2 multiplies its inputs $\{X_{2,t}\}$ by -1 before feeding them to the channel (which obviously does not affect the transmit power) and if Transmitter 2 and Receiver 2 multiply the outputs $\{Y_{2,t}\}$ by -1 before processing them.

B. Result

Without feedback, the prelog of the AWGN IC equals 1; with noise-free feedback it can be 2, depending on the noise correlation $\rho_z \in [-1, 1]$.

Theorem 5: The prelog of the AWGN IC with noise-free feedback satisfies the following three statements.

- If $\rho_z = -1$, then the prelog is given by

$$\overline{\lim_{P\to\infty}} \frac{C_{\text{IC},\Sigma}(P, \sigma^2, \rho_z, a)}{\frac{1}{2}\log(1+P)} = 2. \tag{29}$$

[2]For simplicity, we do not treat setups with correlated feedback noises or setups with feedback noises that are correlated with the forward noises.

- If $\rho_z \in (-1,1)$, then the prelog is given by

$$\overline{\lim_{P\to\infty}} \frac{C_{\mathrm{IC},\Sigma}(P,\sigma^2,\rho_z,a)}{\frac{1}{2}\log(1+P)} = 1. \tag{30}$$

- If $\rho_z = 1$, then the prelog satisfies

$$1 \leq \overline{\lim_{P\to\infty}} \frac{C_{\mathrm{IC},\Sigma}(P,\sigma^2,\rho_z,a)}{\frac{1}{2}\log(1+P)} \leq 2. \tag{31}$$

  Moreover, when the cross gain a is equal to 1, the prelog is more precisely given by

$$\overline{\lim_{P\to\infty}} \frac{C_{\mathrm{IC},\Sigma}(P,\sigma^2,\rho_z,a)}{\frac{1}{2}\log(1+P)} = 1. \tag{32}$$

  Proof: See Section IX. ■

V. Achievability of Prelog larger than 1 for the AWGN BC with Noise-Free Feedback

In this section we consider the AWGN BC with noise-free feedback, and prove the achievability of prelog 2 when $\rho_z = -1$ and the more general achievability result (19). These asymptotic results are achieved by the Ozarow-Leung scheme [3], [4] when the scheme's parameter is chosen appropriately. For completeness, we briefly describe the Ozarow-Leung scheme with such an appropriate choice of parameter (Section V-A) and analyze its performance (Section V-B). We finally analyze the high-SNR asymptotics of the sum-rates achieved by this scheme (Sections V-C and V-D).

A. Scheme

The scheme by Ozarow and Leung [3], [4] (see also [5] and [8]) is based on the iterative strategy proposed by Schalkwijk and Kailath [7].

Prior to transmission, the transmitter maps the Message M_ν, for $\nu \in \{1,2\}$, into a Message point Θ_ν:

$$\Theta_\nu \triangleq 1/2 - \frac{M_\nu - 1}{\lfloor 2^{nR_\nu} \rfloor}. \tag{33}$$

It then describes Message point Θ_ν in n channel uses to Receiver ν.

The transmission starts with an initialization phase consisting of the first two channel uses. Channel use $\nu \in \{1,2\}$ is dedicated to Receiver ν only, and the transmitter sends

$$X_\nu = \sqrt{\frac{P}{P+\sigma_N^2}} \left(\sqrt{\frac{P}{\mathsf{Var}(\Theta_\nu)}} \Theta_\nu + N \right),$$

where $\mathsf{Var}(\Theta_\nu)$ denotes the variance of the random variable Θ_ν and where N is a zero-mean Gaussian random variable of variance σ_N^2 independent of the messages M_1 and M_2 and of the noise sequence $\{(Z_{1,t}, Z_{2,t})\}$.[3] At the end of this initialization phase, each receiver estimates its desired message point. Specifically, Receiver ν, for $\nu \in \{1,2\}$, produces the estimate $\hat{\Theta}_{\nu,2}$ based on channel output $Y_{\nu,\nu}$:

$$\begin{aligned}\hat{\Theta}_{\nu,2} &\triangleq \sqrt{\frac{\mathsf{Var}(\Theta_\nu)}{P}} \sqrt{\frac{P+\sigma_N^2}{P}} Y_{\nu,\nu} \\ &= \Theta_\nu + \sqrt{\frac{\mathsf{Var}(\Theta_\nu)}{P}} \sqrt{\frac{P+\sigma_N^2}{P}} (N + Z_{\nu,\nu}),\end{aligned}$$

and thus has an estimation error:

$$\epsilon_{\nu,2} \triangleq \hat{\Theta}_{\nu,2} - \Theta_\nu = \sqrt{\frac{\mathsf{Var}(\Theta_\nu)}{P}} \sqrt{\frac{P+\sigma_N^2}{P}} (N + Z_{\nu,\nu}).$$

The subsequent $n-2$ channel uses are used to refine the receivers' estimates. To this end, the transmitter sends in each subsequent channel use $t \in \{3,\ldots,n\}$ a linear combination of Receiver 1's estimation error $\epsilon_{1,t-1}$ about Message point Θ_1 and of Receiver 2's estimation error $\epsilon_{2,t-2}$ about Message point Θ_2. Notice that the transmitter knows these estimation errors because it is cognizant of both message points Θ_1 and Θ_2, and through the feedback, also of the receivers' estimates. Specifically, at time $t \in \{3,\ldots,n\}$ the transmitter sends

$$\begin{aligned}X_t \;=\; & \sqrt{\frac{P}{1+\gamma^2+2\gamma|\rho_{t-1}|}} \\ & \cdot \left(\frac{\epsilon_{1,t-1}}{\sqrt{\alpha_{1,t-1}}} + \gamma \mathrm{sign}(\rho_{t-1}) \frac{\epsilon_{2,t-1}}{\sqrt{\alpha_{2,t-1}}} \right),\end{aligned}$$

where

$$\alpha_{\nu,t-1} \triangleq \mathsf{Var}(\epsilon_{\nu,t-1}),$$

and

$$\rho_{t-1} \triangleq \frac{\mathsf{Cov}[\epsilon_{1,t-1}, \epsilon_{2,t-1}]}{\sqrt{\mathsf{Var}(\epsilon_{1,t-1})}\sqrt{\mathsf{Var}(2,t-2)}},$$

and where $\mathrm{sign}(\cdot)$ denotes the signum function, i.e., $\mathrm{sign}(x) = 1$ if $x \geq 0$ and $\mathrm{sign}(x) = -1$ otherwise. The parameter γ is (possibly suboptimally) chosen as

$$\gamma \triangleq \frac{\sigma_1}{\sigma_2}. \tag{34}$$

After each channel use $t \in \{3,\ldots,n\}$ the two receivers update their message-point estimates according to the rule:

$$\hat{\Theta}_{\nu,t} = \hat{\Theta}_{\nu,t-1} - \frac{\mathsf{Cov}[\epsilon_{\nu,t-1}, Y_{\nu,t}]}{\mathsf{Var}(Y_{\nu,t})} Y_{\nu,t}, \quad \nu \in \{1,2\}. \tag{35}$$

Each receiver decodes its intended message as follows. After the reception of the n-th channel output, each Receiver ν produces as its guess the message $\hat{M}_\nu$ whose message point is closest to its last estimate $\hat{\Theta}_{\nu,n}$, i.e.,

$$\hat{M}_\nu = \mathrm{argmin}_{m \in \{1,\ldots,\lfloor e^{nR_\nu} \rfloor\}} \left| \Theta_\nu(m) - \hat{\Theta}_{\nu,n} \right|,$$

where ties can be resolved arbitrarily.

[3] The described scheme can easily be turned into a deterministic scheme of the same asymptotic probability of error using a trick introduced in [11] and applied in the scheme in Section VIII-A.

B. Analysis of Performance

We only present a rough analysis of the scheme. For details see [3], [4].

The probability of error of the described scheme tends to 0 as the blocklength n tends to infinity, if:

$$R_\nu < \overline{\lim_{n\to\infty}} \frac{1}{n}\sum_{t=2}^{n}\frac{1}{2}\log\left(\frac{\alpha_{\nu,t-1}}{\alpha_{\nu,t}}\right), \quad \nu\in\{1,2\}; \quad (36)$$

here $\alpha_{\nu,1} \triangleq \mathsf{Var}(\Theta_\nu)$,

$$\alpha_{\nu,2} \triangleq \frac{\mathsf{Var}(\Theta_\nu)}{P}\frac{P+\sigma_N^2}{P}(\sigma_N^2+\sigma_\nu^2), \quad \nu\in\{1,2\},$$

and the variances $\{\alpha_{1,t}\}_{t=3}^n$ and $\{\alpha_{2,t}\}_{t=3}^n$ are defined through the recursions:

$$\alpha_{1,t} = \alpha_{1,t-1}\frac{\frac{\sigma_1}{\sigma_2}P(1-\rho_{t-1}^2)+\sigma_1^2(\frac{\sigma_1}{\sigma_2}+\frac{\sigma_2}{\sigma_1}+2|\rho_{t-1}|)}{(\frac{\sigma_1}{\sigma_2}+\frac{\sigma_2}{\sigma_1}+2|\rho_{t-1}|)(P+\sigma_1^2)}, \quad (37)$$

and

$$\alpha_{2,t} = \alpha_{2,t-1}\frac{\frac{\sigma_2}{\sigma_1}P(1-\rho_{t-1}^2)+\sigma_2^2(\frac{\sigma_1}{\sigma_2}+\frac{\sigma_2}{\sigma_1}+2|\rho_{t-1}|)}{(\frac{\sigma_1}{\sigma_2}+\frac{\sigma_2}{\sigma_1}+2|\rho_{t-1}|)(P+\sigma_2^2)}. \quad (38)$$

The sequence of correlation coefficients $\{\rho_t\}_{t=2}^n$ is defined as

$$\rho_2 \triangleq \frac{\mathsf{Cov}[\epsilon_{1,2},\epsilon_{2,2}]}{\sqrt{\mathsf{Var}(\epsilon_{1,2})\,\mathsf{Var}(\epsilon_{2,2})}} = \frac{\sigma_N^2}{\sqrt{\sigma_N^2+\sigma_1^2}\sqrt{\sigma_N^2+\sigma_2^2}} \quad (39)$$

and for $t\in\{3,\dots,n\}$ through Recursion (40) on top of the next page. We shall choose the variance σ_N^2 such that the sequence $\{\rho_t\}_{t=2}^n$ is constant in magnitude but alternates in sign, i.e., such that for some $\rho^*\in(0,1)$:

$$\rho_t = (-1)^t\rho^*, \quad t\in\{2,\dots,n\}. \quad (41)$$

This way, the ratios $\frac{\alpha_{1,t-1}}{\alpha_{1,t}}$ and $\frac{\alpha_{2,t-1}}{\alpha_{2,t}}$ are constant for $t\in\{3,\dots,n\}$, and trivially the limit on the right-hand side of (36) equals

$$\begin{aligned}&\overline{\lim_{n\to\infty}}\frac{1}{n}\sum_{t=2}^{n}\frac{1}{2}\log\left(\frac{\alpha_{\nu,t-1}}{\alpha_{\nu,t}}\right)\\ &= \frac{1}{2}\log_2\left(\frac{P+\sigma_\nu^2}{\frac{\sigma_\nu^2}{\sigma_1^2+\sigma_2^2+2\sigma_1\sigma_2\rho^*}P(1-(\rho^*)^2)+\sigma_\nu^2}\right). \quad (42)\end{aligned}$$

By Equation (39), we can set the correlation coefficient ρ_2 to every desired value in $[0,1)$ if we choose the variance σ_N^2 appropriately. Therefore, Condition (41) can be satisfied for all $\rho^*\in[0,1)$ with the following "fixed point" property: substituting ρ^* for ρ_{t-1} in Recursion (40) yields $\rho_t=-\rho^*$, and similarly, substituting $-\rho^*$ for ρ_{t-1} in Recursion (40) yields $\rho_t=\rho^*$. In [3], [4] it was shown that Recursion (40) has at least one such "fixed point". Also, using simple algebraic manipulations, the "fixed points" ρ^* of Recursion (40) are found to be the solutions in $(0,1)$ to the following cubic equation in ρ:

$$\rho^3+c_2\rho^2+c_1\rho+c_0=0, \quad (43)$$

where

$$\begin{aligned}c_2 &\triangleq -\frac{2\sigma_1\sigma_2}{P}-\frac{P+\sigma_1^2+\sigma_2^2+\rho_z\sigma_1\sigma_2}{\sqrt{P+\sigma_1^2}\sqrt{P+\sigma_2^2}}\\ &\quad -\frac{2\sigma_1^2\sigma_2^2}{P\sqrt{P+\sigma_1^2}\sqrt{P+\sigma_2^2}}, \quad (44)\\ c_1 &\triangleq -1-\frac{\sigma_1^2+\sigma_2^2}{P}-\rho_z\frac{(\sigma_1^2+\sigma_2^2)}{\sqrt{P+\sigma_1^2}\sqrt{P+\sigma_2^2}}\\ &\quad -\frac{\sigma_1\sigma_2(\sigma_1^2+\sigma_2^2)}{P\sqrt{P+\sigma_1^2}\sqrt{P+\sigma_2^2}}, \quad (45)\\ c_0 &\triangleq \frac{P+\sigma_1^2+\sigma_2^2-\rho_z\sigma_1\sigma_2}{\sqrt{P+\sigma_1^2}\sqrt{P+\sigma_2^2}}. \quad (46)\end{aligned}$$

Combining these observations with (36) and (42), we obtain the following lemma.

Lemma 1: Choosing the parameter γ as in (34), the Ozarow-Leung scheme achieves all nonnegative rate pairs (R_1,R_2) satisfying

$$R_1 < \frac{1}{2}\log_2\left(\frac{P+\sigma_1^2}{\frac{\sigma_1^2}{\sigma_1^2+\sigma_2^2+2\sigma_1\sigma_2\rho^*}P(1-(\rho^*)^2)+\sigma_1^2}\right), \quad (47)$$

$$R_2 < \frac{1}{2}\log_2\left(\frac{P+\sigma_2^2}{\frac{\sigma_2^2}{\sigma_1^2+\sigma_2^2+2\sigma_1\sigma_2\rho^*}P(1-(\rho^*)^2)+\sigma_2^2}\right), \quad (48)$$

where ρ^* is a[4] solution in the open interval $(0,1)$ to the cubic equation (43).

Remark 1: To characterize the scheme's performance for a general parameter γ requires finding the solutions to a sixth-order equation [3], [4]. Our (possibly suboptimal) choice of γ in (34) makes it possible to find the scheme's performance while solving only a cubic equation; see (43).

C. High-SNR asymptotics for constant $\rho_z=-1$

In this section we prove that the above described scheme achieves prelog 2 when $\rho_z=-1$.

Proposition 6: When $\rho_z=-1$ the Ozarow-Leung scheme with parameter $\gamma=\frac{\sigma_1}{\sigma_2}$ achieves prelog 2.

Proof: Let ρ_z be -1. By Lemma 1, for every power P and every $\epsilon>0$ the Ozarow-Leung scheme with parameter $\gamma=\frac{\sigma_1}{\sigma_2}$ achieves a sum-rate

$$\begin{aligned}&R_\Sigma(P)\\ &= \frac{1}{2}\log\left(\frac{P+\sigma_1^2}{\frac{\sigma_1^2(1+\rho^*(P))}{\sigma_1^2+\sigma_2^2+2\sigma_1\sigma_2\rho^*(P)}P(1-\rho^*(P))+\sigma_1^2}\right)\\ &\quad +\frac{1}{2}\log\left(\frac{P+\sigma_2^2}{\frac{\sigma_2^2(1+\rho^*(P))}{\sigma_1^2+\sigma_2^2+2\sigma_1\sigma_2\rho^*(P)}P(1-\rho^*(P))+\sigma_2^2}\right)-\epsilon,\end{aligned}$$

where the parameter $\rho^*(P)$ is defined as a solution in $(0,1)$ to the cubic equation (43).

Since for each power $P>0$ the parameter $\rho^*(P)$ lies in the open interval $(0,1)$, we have

$$\frac{\sigma_1^2(1+\rho^*(P))}{\sigma_1^2+\sigma_2^2+2\sigma_1\sigma_2\rho^*(P)} \le \frac{2\sigma_1^2}{\sigma_1^2+\sigma_2^2}, \quad (49)$$

$$\frac{\sigma_2^2(1+\rho^*(P))}{\sigma_1^2+\sigma_2^2+2\sigma_1\sigma_2\rho^*(P)} \le \frac{2\sigma_2^2}{\sigma_1^2+\sigma_2^2}, \quad (50)$$

[4] If there is more than one solution in $[0,1]$ to (43) we can freely choose one. Numerical results suggest that there is only one solution.

$$\rho_t = \text{sign}(\rho_{t-1}) \cdot \frac{\sqrt{P+\sigma_1^2}\sqrt{P+\sigma_2^2}}{P(1-|\rho_{t-1}|^2)+(\sigma_1^2+\sigma_2^2+2\sigma_1\sigma_2|\rho_{t-1}|)} \cdot \left(|\rho_{t-1}|\left(\frac{\sigma_1}{\sigma_2}+\frac{\sigma_2}{\sigma_1}+2|\rho_{t-1}|\right)-\left(\frac{\sigma_1}{\sigma_2}+|\rho_{t-1}|\right)\left(\frac{\sigma_2}{\sigma_1}+|\rho_{t-1}|\right)\frac{P(P+\sigma_1^2+\sigma_2^2-\rho_z\sigma_1\sigma_2)}{(P+\sigma_1^2)(P+\sigma_2^2)}\right) \tag{40}$$

and we can thus lower bound the achievable sum-rate $R_\Sigma(P)$ by

$$R_\Sigma(P) \geq \frac{1}{2}\log\left(\frac{P+\sigma_1^2}{\frac{2\sigma_1^2}{\sigma_1^2+\sigma_2^2}P(1-\rho^*(P))+\sigma_1^2}\right) + \frac{1}{2}\log\left(\frac{P+\sigma_2^2}{\frac{2\sigma_2^2}{\sigma_1^2+\sigma_2^2}P(1-\rho^*(P))+\sigma_2^2}\right) - \epsilon. \tag{51}$$

The desired lower bound on the prelog

$$\overline{\lim_{P\to\infty}} \frac{R_\Sigma(P)}{\frac{1}{2}\log(1+P)} \geq 2,$$

is then obtained from (51) by showing that as $P \to \infty$ the sequence of solutions $\{\rho^*(P)\}_{\{P>0\}}$ tends to -1 approximately as $-1+P^{-1}$. This follows from Lemma 2 that we state next. ■

Lemma 2: Let ρ_z be -1. For each power $P > 0$ let $\rho^*(P)$ be the solution in the interval $(0,1)$ to (43). Then, for every $\epsilon > 0$

$$\lim_{P\to\infty} P^{1-\epsilon}(1-\rho^*(P)) = 0. \tag{52}$$

Proof: The result could be proved by first computing for each $P > 0$ the solution $\rho^*(P)$ to the cubic equation (43) (e.g., using Cardano's formula), and then analyzing the asymptotics of the solutions as $P \to \infty$. However, this line of attack is rather cumbersome. Instead, we show that if a sequence $\{\rho^*(P)\}_{\{P>0\}}$ in $(0,1)$ violates (52) for some $\epsilon > 0$, then there exists some power $P > 0$ such that $\rho^*(P)$ cannot be a solution to (43). For details, see Appendix A. ■

D. High-SNR asymptotics for $\rho_z(P)$ varying with P

We prove the more general asymptotic high-SNR achievability result in (19).

Proposition 7: Fix a sequence $\{\rho_z(P)\}_{\{P>0\}}$ and define the limit β as in (17):

$$\beta = \overline{\lim_{P\to\infty}} \frac{-\log(1+\rho_z(P))}{\log(P)}.$$

The Ozarow-Leung scheme with parameter $\gamma = \frac{\sigma_1}{\sigma_2}$ achieves sum-rates $\{R_\Sigma(P)\}_{\{P>0\}}$ satisfying

$$\overline{\lim_{P\to\infty}} \frac{R_\Sigma(P)}{\frac{1}{2}\log(1+P)} \geq \min\{1+\beta, 2\}. \tag{53}$$

Proof: By Lemma 1 and Inequalities (49) and (50) in the previous subsection, for each power $P > 0$ and $\epsilon > 0$, the Ozarow-Leung scheme with parameter $\gamma = \frac{\sigma_1}{\sigma_2}$ achieves a sum-rate $R_\Sigma(P)$ that is lower bounded by

$$R_\Sigma(P) \geq \frac{1}{2}\log_2\left(\frac{P+\sigma_1^2}{\frac{2\sigma_1^2}{\sigma_1^2+\sigma_2^2}P(1-\rho^*(P))+\sigma_1^2}\right) + \frac{1}{2}\log_2\left(\frac{P+\sigma_2^2}{\frac{2\sigma_2^2}{\sigma_1^2+\sigma_2^2}P(1-\rho^*(P))+\sigma_2^2}\right) - \epsilon, \tag{54}$$

where $\rho^*(P)$ is defined as a solution in $(0,1)$ to the cubic equation (43). The desired asymptotic lower bound (53) then follows from (54) and the following Lemma 3. ■

Lemma 3: for each power $P > 0$, let a noise correlation $\rho_z(P) \in [-1,1]$ be given, and let $\rho^*(P)$ be a solution in $(0,1)$ to the cubic equation in (43). Then,

$$\lim_{P\to\infty} P^{1-\epsilon}(1-\rho^*(P)) = 0, \quad \forall \epsilon > \max\left\{\frac{1-\beta}{2}, 0\right\}.$$

Proof: See Appendix B. ■

VI. Proofs of Theorems 1 and 2 and Note 1 for the AWGN BC with Noise-Free Feedback

As mentioned in Note 2, Relations (12)–(14) in Theorem 1 can be directly obtained from Theorem 2. Nevertheless, for convenience to the reader we provide a separate proof for each of the relations in Theorem 1.

A. Proof of Theorem 1

Equation (14) follows from the following more general relation: irrespective of the noise correlation $\rho_z \in [-1,1]$ and the noise variances $\sigma_1^2, \sigma_2^2 > 0$ the prelog satisfies

$$1 \leq \overline{\lim_{P\to\infty}} \frac{C_{\text{BC},\Sigma}(P,\sigma_1^2,\sigma_2^2,\rho_z)}{\frac{1}{2}\log(1+P)} \leq 2. \tag{55}$$

The lower bound in (55) holds because without feedback the prelog of the AWGN BC equals 1 irrespective of $\rho_z \in [-1,1]$ (see the capacity result of the AWGN BC without feedback in [10]). The upper bound in (55) holds because whenever a rate pair (R_1, R_2) is achievable over the AWGN BC with noise-free feedback, then the rates R_1 and R_2 cannot exceed the single-user capacities (with feedback) of the AWGN channels from the transmitter to the corresponding receiver, i.e.,

$$R_\nu \leq \frac{1}{2}\log\left(1+\frac{P}{\sigma_\nu^2}\right), \quad \nu \in \{1,2\}. \tag{56}$$

Equation (12) follows from Relation (55) and Proposition 6.

We next establish Equation (15). Notice that when $\rho_z = 1$ and $\sigma_1^2 = \sigma_2^2$, the two noise sequences $\{Z_{1,t}\}$ and $\{Z_{2,t}\}$ coincide, and thus the two receivers observe exactly the same output sequences, i.e., $Y_{1,t} = Y_{2,t}$ at all time instances $t \in \{1,\ldots,n\}$. Consequently, if Receiver 2 can decode M_2, then so can Receiver 1 and hence (R_1, R_2) can be achievable only if $R_1 + R_2$ does not exceed the capacity of the channel to Receiver 1. This implies that the sum-capacity of the AWGN BC with noise-free feedback coincides with the single-user

feedback capacity of the AWGN channel from the transmitter to one of the two receivers:

$$C_{\mathrm{BC},\Sigma}(P,\sigma^2,\sigma^2,\rho_z=1)=\frac{1}{2}\log\left(1+\frac{P}{\sigma^2}\right). \tag{57}$$

This establishes the desired result in (15).

We finally prove Equation (13). By Relation (55) it suffices to show that when ρ_z lies in the open interval $(-1,1)$, then the prelog is upper bounded by 1. Invoking the cutset bound [12, Theorem 15.10.1] with a cut between the transmitter and both receivers we can upper bound the sum-capacity as

$$C_{\mathrm{BC},\Sigma}(P,\sigma_1^2,\sigma_2^2,\rho_z)\leq \max I(X;Y_1Y_2), \tag{58}$$

where the maximization is over all input distributions on X satisfying $\mathsf{E}\left[X^2\right]\leq P$. By the entropy maximizing property of the Gaussian distribution under a covariance matrix constraint [12], the upper bound in (58) is equivalent to

$$C_{\mathrm{BC},\Sigma}(P,\sigma_1^2,\sigma_2^2,\rho_z)\leq \frac{1}{2}\left(1+\frac{P}{\frac{\sigma_1^2\sigma_2^2}{\sigma_1^2+\sigma_2^2}\left(1-\rho_z^2\right)}\right), \tag{59}$$

which establishes that for every $\rho_z\in(-1,1)$ the prelog is upper bounded by 1.

B. Proof of Theorem 2

The asymptotic upper bound (18) follows again from the cutset bound and the entropy maximizing property of Gaussian distributions under a covariance constraint. In fact, applying the cutset bound with a cut between the transmitter and both receivers (in analogy to (59)) for given power $P>0$, noise variances $\sigma_1^2,\sigma_2^2>0$, and noise correlation $\rho_z(P)\in(-1,1)$ we can upper bound the sum-capacity as

$$\begin{aligned}&C_{\mathrm{BC},\Sigma}(P,\sigma_1^2,\sigma_2^2,\rho_z(P))\\&\quad\leq\frac{1}{2}\log\left(1+\frac{P}{\frac{\sigma_1^2\sigma_2^2}{\sigma_1^2+\sigma_2^2}(1-|\rho_z(P)|^2)}\right)\\&\quad\leq\frac{1}{2}\log\left(1+\frac{P}{2\frac{\sigma_1^2\sigma_2^2}{\sigma_1^2+\sigma_2^2}(1-|\rho_z(P)|)}\right),\end{aligned} \tag{60}$$

where in the second inequality we used that $\rho_z(P)\in(-1,1)$. Moreover—as argued in (56)—the sum-capacity cannot exceed the sum of the two single-user capacities of the channels from the transmitter to the two receivers, i.e.,

$$\begin{aligned}&C_{\mathrm{BC},\Sigma}(P,\sigma_1^2,\sigma_2^2,\rho_z)\\&\quad\leq\frac{1}{2}\log\left(1+\frac{P}{\sigma_1^2}\right)+\frac{1}{2}\log\left(1+\frac{P}{\sigma_2^2}\right).\end{aligned} \tag{61}$$

The asymptotic upper bound (18) follows then by combining (60) and (61) with the definition of α in (16).

The asymptotic lower bound (19) follows from Proposition 7 in Section V-D.

C. Proof of Note 1

We have to show that the achievability results in Theorem 1 remain valid also in the weaker setup with only one-sided feedback. The achievability results in (13) and (14) remain valid because a prelog of 1 is trivially achievable for all values of $\rho_z\in[-1,1]$ even without feedback [10]. The achievability result in (12) remains valid because for $\rho_z=-1$ the capacity regions of the setups with one-sided and two-sided feedback coincide. In fact, after each channel use t the transmitter can locally compute the missing output $Y_{2,t}$ (or $Y_{1,t}$) from the observed feedback output $Y_{1,t}$ (or $Y_{2,t}$) and the input X_t:

$$Y_{2,t}=-\frac{\sigma_2}{\sigma_1}(Y_{1,t}-X_t)+X_t,\quad t\in\{1,\dots,n\}.$$

VII. Proof of Theorem 4 for the AWGN BC with Noisy Feedback

Since for all correlation coefficients $\rho_z\in[-1,1]$ prelog 1 is achievable even without feedback [10], the interesting part of Theorem 4 is the converse result. We prove this converse result using a genie-argument similar to [6].

Our proof is based on the following three steps. In the first step we introduce a *genie-aided AWGN BC* without feedback and show that its sum-capacity upper bounds the sum-capacity of the original AWGN BC with noisy feedback. In the second step we introduce a *less noisy AWGN BC* with neither genie-information nor feedback and show that its sum-capacity coincides with the sum-capacity of the genie-aided AWGN BC. In the third step, we finally show that the prelog of the less noisy AWGN BC equals 1, irrespective of the noise variances $\sigma_1^2,\sigma_2^2,\sigma_{W1}^2,\sigma_{W2}^2>0$ and the correlation coefficient $\rho_z\in[-1,1]$. These three steps establish the desired converse result.

We elaborate on these three steps starting with the first one. The genie-aided AWGN BC is defined as the original AWGN BC *without feedback*, but with a genie that prior to transmission reveals the sequences $\{(Z_{1,t}+W_{1,t})\}_{t=1}^n$ and $\{(Z_{2,t}+W_{2,t})\}_{t=1}^n$ to the transmitter and both receivers. Notice that with this genie information, after each channel use t, the transmitter can locally compute the missing feedback outputs $V_{1,t}$ and $V_{2,t}$:

$$V_{1,t}=X_t+(Z_{1,t}+W_{1,t}), \tag{62}$$
$$V_{2,t}=X_t+(Z_{2,t}+W_{2,t}). \tag{63}$$

We can thus conclude that the sum-capacity of the genie-aided AWGN BC is at least as large as the sum-capacity of the original AWGN BC with feedback.

We next elaborate on the second step. The less noisy AWGN BC is described by the channel law:

$$\tilde{Y}_{1,t}=x_t+\tilde{Z}_{1,t}, \tag{64}$$
$$\tilde{Y}_{2,t}=x_t+\tilde{Z}_{2,t}, \tag{65}$$

where the noise sequences are defined as

$$\tilde{Z}_{1,t}\triangleq Z_{1,t}-\mathsf{E}[Z_{1,t}|(Z_{1,t}+W_{1,t}),(Z_{2,t}+W_{2,t})], \tag{66}$$
$$\tilde{Z}_{2,t}\triangleq Z_{2,t}-\mathsf{E}[Z_{2,t}|(Z_{1,t}+W_{1,t}),(Z_{2,t}+W_{2,t})], \tag{67}$$

and are of variances

$$\mathsf{Var}\left(\tilde{Z}_{1,t}\right) = \sigma_1^2 \frac{\sigma_{W1}^2\sigma_2^2(1-\rho_z^2) + \sigma_{W1}^2\sigma_{W2}^2}{(\sigma_1^2+\sigma_{W1}^2)(\sigma_2^2+\sigma_{W2}^2) - \sigma_1^2\sigma_2^2\rho_z^2}, \quad (68)$$

$$\mathsf{Var}\left(\tilde{Z}_{2,t}\right) = \sigma_2^2 \frac{\sigma_{W2}^2\sigma_1^2(1-\rho_z^2) + \sigma_{W2}^2\sigma_{W1}^2}{(\sigma_1^2+\sigma_{W1}^2)(\sigma_2^2+\sigma_{W2}^2) - \sigma_1^2\sigma_2^2\rho_z^2}. \quad (69)$$

By the following two observations, the sum-capacity of this less noisy AWGN BC coincides with the sum-capacity of the genie-aided AWGN BC. Firstly, the sum-capacity of the less noisy AWGN BC remains unchanged if prior to transmission a genie reveals the sequences $\{Z_{1,t}+W_{1,t}\}$ and $\{Z_{2,t}+W_{2,t}\}$ to the transmitter and both receivers. This follows because by Definitions (66) and (67) the genie-information $\{Z_{1,t}+W_{1,t}\}$ and $\{Z_{2,t}+W_{2,t}\}$ is independent of the reduced noise sequences $\{\tilde{Z}_{1,t}, \tilde{Z}_{2,t}\}$, and thus plays only the role of common randomness which does not increase capacity. Secondly, the sum-capacity of the genie-aided AWGN BC coincides with the sum-capacity of the less noisy AWGN BC, when in this latter case the transmitter and both receivers additionally know the genie-information $\{(Z_{1,t}+W_{1,t})\}$ and $\{(Z_{2,t}+W_{2,t})\}$. This holds because knowing the genie-information $\{(Z_{1,t}+W_{1,t})\}_{t=1}^n$ and $\{(Z_{2,t}+W_{2,t})\}_{t=1}^n$ the outputs $\tilde{Y}_{1,t}$ and $\tilde{Y}_{2,t}$ can be transformed into the outputs $Y_{1,t}$ and $Y_{2,t}$, and vice versa.

We finally elaborate on the third step. The less noisy AWGN BC is a classical AWGN BC with neither feedback nor genie-information, and its sum-capacity is given by [10]:

$$C_{\text{BCLessNoisy},\Sigma}(P, \sigma_1^2, \sigma_2^2, \rho_z, \sigma_{W1}^2, \sigma_{W2}^2) = \frac{1}{2}\log\left(1 + \frac{P}{\min\left\{\mathsf{Var}\left(\tilde{Z}_{1,t}\right), \mathsf{Var}\left(\tilde{Z}_{2,t}\right)\right\}}\right), \quad (70)$$

where the variances $\mathsf{Var}\left(\tilde{Z}_{1,t}\right), \mathsf{Var}\left(\tilde{Z}_{2,t}\right)$ are defined in (68) and (69). By (68)–(70) the prelog of the less noisy AWGN BC equals 1, irrespective of the noise variances $\sigma_1^2, \sigma_2^2, \sigma_{W1}^2, \sigma_{W2}^2 > 0$ and the noise correlation $\rho_z \in [-1, 1]$. This concludes the third step, and thus our proof.

VIII. Achievability of Prelog 2 for the AWGN IC with Noise-Free Feedback

We prove that the prelog of the AWGN IC with one-sided noise-free feedback equals 2 when $\rho_z = -1$. As in the previous section, this prelog is achieved with a Schalkwijk-Kailath-type scheme. More specifically, it is achieved by a straightforward extension of Kramer's memoryless-LMMSE scheme for interference channels [8, Section VI-B] to channels with correlated noises.

A. Scheme for $\rho_z = -1$

Prior to transmission, each transmitter maps its message into a message point as in (33). The transmitters then describe these message points to their intended receivers using n channel uses.

The first three channel uses are part of an initialization procedure. In the first channel use both transmitters remain silent. Via the feedback both transmitters then observe the Gaussian random variable $N \triangleq Z_{1,1} = -Z_{2,1}$, which will serve them as common randomness in future transmissions. In the second channel use Transmitter 2 remains again silent and Transmitter 1 sends:

$$X_{1,2} = \sqrt{\frac{P}{P+\sigma_N^2}}\left(\sqrt{\frac{P}{\mathsf{Var}(\Theta_1)}}\Theta_1 + N\frac{\sigma_N}{\sigma}\right),$$

where σ_N will be defined later on. In the third channel use Transmitter 1 remains silent and Transmitter 2 sends:

$$X_{2,3} = \sqrt{\frac{P}{P+\sigma_N^2}}\left(\sqrt{\frac{P}{\mathsf{Var}(\Theta_2)}}\Theta_2 + N\frac{\sigma_N}{\sigma}\right).$$

At the end of this initialization phase Receiver 1 produces the estimate $\hat{\Theta}_{1,3} \triangleq \sqrt{\frac{P+\sigma_N^2}{P}}\sqrt{\frac{\mathsf{Var}(\Theta_1)}{P}}Y_{1,2}$ and Receiver 2 the estimate $\hat{\Theta}_{2,3} \triangleq \sqrt{\frac{P+\sigma_N^2}{P}}\sqrt{\frac{\mathsf{Var}(\Theta_2)}{P}}Y_{2,3}$. Their estimation errors are thus given by:

$$\epsilon_{1,3} \triangleq \hat{\Theta}_{1,3} - \Theta_1 = \sqrt{\frac{\mathsf{Var}(\Theta_1)}{P}}\sqrt{\frac{P+\sigma_N^2}{P}}(N + Z_{1,2}),$$

and

$$\epsilon_{2,3} \triangleq \hat{\Theta}_{2,3} - \Theta_2 = \sqrt{\frac{\mathsf{Var}(\Theta_2)}{P}}\sqrt{\frac{P+\sigma_N^2}{P}}(N + Z_{2,2}).$$

In the subsequent $(n-3)$ channel uses, the two transmitters transmit symbols in order to help the receivers refine these estimates. In channel use $t \in \{4, \ldots, n\}$, Transmitter 1 sends a scaled version of Receiver 1's estimation error $\epsilon_{1,t-1}$ about message point Θ_1 and Transmitter 2 sends Receiver 2's estimation error $\epsilon_{2,t-2}$ about message point Θ_2. Notice that each transmitter knows the estimation error of its corresponding receiver because it is cognizant of its own message point and through the noise-free one-sided feedback also of the estimate at its corresponding receiver. Specifically, at time $t \in \{4, \ldots, n\}$ Transmitter 1 sends

$$X_{1,t} = \sqrt{\frac{P}{\alpha_{1,t-1}}}\epsilon_{1,t-1},$$

and Transmitter 2 sends

$$X_{2,t} = \text{sign}(\rho_{t-1})\sqrt{\frac{P}{\alpha_{2,t-1}}}\epsilon_{2,t-1}.$$

After each channel use $t \in \{4, \ldots, n\}$ the two receivers update their message-point estimates according to the updating rule (35) in Section V-A.

After the reception of the n-th channel output, Receiver ν produces as its guess the message $\hat{M}_\nu$ whose message point is closest to its estimate $\hat{\Theta}_{\nu,n}$, i.e.,

$$\hat{M}_\nu = \text{argmin}_{m \in \{1, \ldots, \lfloor e^{nR_\nu} \rfloor\}} \left|\Theta_\nu(m) - \hat{\Theta}_{\nu,n}\right|,$$

where ties can be resolved arbitrarily.

B. Analysis

We present only a rough analysis of the scheme. For more details, see [8].

The probability of error of the described scheme tends to 0 as the blocklength n tends to infinity, if for $\nu \in \{1,2\}$:

$$R_\nu \leq \varlimsup_{n\to\infty} \frac{1}{n}\sum_{t=3}^{n} \frac{1}{2}\log\left(\frac{\alpha_{\nu,t-1}}{\alpha_{\nu,t}}\right), \tag{71}$$

where $\alpha_{\nu,2} = \mathsf{Var}(\Theta_\nu)$;

$$\alpha_{\nu,3} = \frac{\mathsf{Var}(\Theta)_\nu}{P}\frac{P+\sigma_N^2}{P}(\sigma_N^2+\sigma^2), \quad \nu \in \{1,2\}; \tag{72}$$

and for $t \in \{4,\dots,n\}$:

$$\alpha_{\nu,t} = \alpha_{\nu,t-1}\frac{Pa^2(1-|\rho_{t-1}|^2)+\sigma^2}{P(1+a^2+2a|\rho_{t-1}|)+\sigma^2}, \quad \nu \in \{1,2\}. \tag{73}$$

The correlation coefficients $\{\rho_t\}_{t=3}^n$ are defined as

$$\rho_3 = \frac{\sigma_N^2}{\sigma_N^2+\sigma^2}, \tag{74}$$

and for $t \in \{4,\dots,n\}$ through Recursion (75) on top of the next page. We shall choose the variance σ_N^2 such that the sequence $\{\rho_t\}_{t=2}^n$ is constant in magnitude but alternates in sign, i.e., such that for some $\rho_{\text{IC}}^* \in (0,1)$:

$$\rho_t = (-1)^t \rho_{\text{IC}}^*, \quad t \in \{3,\dots,n\}. \tag{76}$$

This way, the ratios $\frac{\alpha_{1,t-1}}{\alpha_{1,t}}$ and $\frac{\alpha_{2,t-1}}{\alpha_{2,t}}$ are constant for $t \in \{4,\dots,n\}$, and trivially the limit on the right-hand side of (71) equals

$$\begin{aligned}\varlimsup_{n\to\infty} &\frac{1}{n}\sum_{t=3}^{n}\frac{1}{2}\log\left(\frac{\alpha_{\nu,t-1}}{\alpha_{\nu,t}}\right)\\ &= \frac{1}{2}\log\left(\frac{P(1+a^2+2a\rho_{\text{IC}}^*)+\sigma^2}{Pa^2(1-(\rho_{\text{IC}}^*)^2)+\sigma^2}\right).\end{aligned} \tag{77}$$

By Equation (74), we can set ρ_3 to every value in $[0,1)$ if we appropriately choose the variance σ_N^2. Therefore, Condition (76) can be satisfied for all $\rho^* \in [0,1)$ that correspond to "fixed points" of Recursion (75), i.e., for all ρ^* such that substituting $\rho_{t-1} = \rho^*$ into Recursion (75) yields $\rho_t = -\rho^*$, and substituting $\rho_{t-1} = -\rho^*$ into Recursion (75) yields $\rho_t = \rho^*$. Using simple algebraic manipulations it can be seen that the set of such "fixed points" is given by the set of solutions in $[0,1)$ to the quartic equation

$$\rho^4 + d_3\rho^3 + d_2\rho^2 + d_1\rho + d_0 = 0, \tag{78}$$

where

$$d_3 = \frac{\sigma^2}{2aP}, \tag{79}$$

$$d_2 = -2 - \frac{\sigma^2(4+a\rho_z)}{2a^2P}, \tag{80}$$

$$d_1 = -\frac{\sigma^2(1+2a^2+2a\rho_z)}{2a^3P} - \frac{\sigma^4}{a^3P^2}, \tag{81}$$

$$d_0 = 1 + \frac{\sigma^2(2a-\rho_z)}{2a^3P}. \tag{82}$$

Notice that Equation (78) has at least one solution in $[0,1)$, and thus, Recursion (75) has at least one "fixed point" ρ_{IC}^* in $[0,1)$. This follows by the Intermediate-Value Theorem and because for $\rho = 0$ and $\rho_z = -1$ the left hand-side of (78) evaluates to $1 + \frac{\sigma^2(2a+1)}{2a^3P} > 0$ and for $\rho = 1$ and $\rho_z = -1$ it evaluates to $-\frac{\sigma^4}{a^3P^2} < 0$. Combining these observations with (71) and (77) leads to the following lemma.

Lemma 4: Let power $P > 0$, noise variance $\sigma^2 > 0$, noise correlation $\rho_z \in [-1,1]$, and cross gain $a \neq 0$ be given. The scheme described in Section VIII-A achieves all rate pairs (R_1, R_2) satisfying

$$R_\nu < \frac{1}{2}\log\left(\frac{P(1+a^2+2a\rho_{\text{IC}}^*)+\sigma^2}{Pa^2(1-(\rho_{\text{IC}}^*)^2)+\sigma^2}\right), \quad \nu \in \{1,2\}, \tag{83}$$

where ρ_{IC}^* is defined as a solution[5] in $(0,1)$ to the quartic equation (78).

C. High-SNR Asymptotics

Proposition 8: When $\rho_z = -1$ and $a > 0$ the above described scheme achieves prelog 2.

Proof: By Lemma 4, for each power $P > 0$ and $\epsilon > 0$ the scheme in the previous section VIII-A achieves a sum-rate

$$\begin{aligned}R_\Sigma(P) &= \log\left(\frac{P(1+a^2\rho_{\text{IC}}^*)+\sigma^2}{Pa^2(1-(\rho_{\text{IC}}^*)^2)+\sigma^2}\right) - \epsilon\\ &\geq \log\left(\frac{P(1+a^2)+\sigma^2}{2Pa^2(1-\rho_{\text{IC}}^*)+\sigma^2}\right) - \epsilon,\end{aligned} \tag{84}$$

where ρ_{IC}^* is defined as a solution in $(0,1)$ to the quartic equation (78), and where the inequality follows because ρ_{IC}^* lies in the interval $(0,1)$.

The desired asymptotic lower bound (29) follows from (84) and from the following Lemma 5. ■

Lemma 5: Let the noise variance $\sigma^2 > 0$, noise correlation $\rho_z = -1$, and cross gain $a > 0$ be given. For each power $P > 0$ let $\rho_{\text{IC}}^*(P)$ to be a solution in the interval $(0,1)$ to the quartic equation (78) in ρ. Then,

$$\lim_{P\to\infty} P^{1-\epsilon}(1-\rho_{\text{IC}}^*(P)) = 0, \quad \forall \epsilon > 0.$$

Proof: See Appendix C. ■

IX. Proof of Theorem 5 for the AWGN IC with Noise-Free Feedback

We first prove Relation (31), which follows from the following more general relation. Irrespective of the symmetric noise-variance $\sigma^2 > 0$, the noise correlation $\rho_z \in [-1,1]$, and the cross gain $a > 0$, the prelog satisfies

$$1 \leq \varlimsup_{P\to\infty} \frac{C_{\text{IC},\Sigma}(P,\sigma,\rho_z,a)}{\frac{1}{2}\log(1+P)} \leq 2. \tag{85}$$

The lower bound can be achieved, e.g., by silencing Transmitter 1 and letting Transmitter 2 communicate its Message M_2 to Receiver 2 over the resulting interference-free AWGN channel $Y_{2,t} = X_{2,t} + Z_{2,t}$ at a rate $R_2 = \frac{1}{2}\log\left(1+\frac{P}{\sigma^2}\right)$. The upper

[5] If there is more than one such solution, then one can freely choose one of them.

$$\rho_t = \text{sign}(\rho_{t-1}) \frac{P(1+a^2+2a|\rho_{t-1}|)+\sigma^2}{Pa^2(1-|\rho_{t-1}^2|)+\sigma^2} \cdot \left(|\rho_{t-1} - 2\frac{P(a+|\rho_{t-1}|)(1+a|\rho_{t-1}|)}{P(1+a^2+2a|\rho_{t-1}|)+\sigma^2} + \frac{P(1+a|\rho_{t-1}|)^2}{(P(1+a^2+2a|\rho_{t-1}|)+\sigma^2)^2}(P(2a+|\rho_{t-1}|(1+a^2))+\sigma^2\rho_z) \right). \tag{75}$$

bound can be derived using the cutset bound and the entropy maximizing property of the Gaussian distribution under a covariance matrix constraint. In fact, applying the cutset bound with a cut between both transmitters and Receiver 2 on one side and Receiver 1 on the other side yields

$$\begin{aligned} R_1 &\leq \max I(X_1X_2;Y_1) \\ &= \frac{1}{2}\log\left(1+\frac{(1+a)^2P}{\sigma^2}\right), \end{aligned}$$

where the maximization is over all joint laws on the pair (X_1, X_2) satisfying the power constraints $\mathsf{E}\left[X_1^2\right] \leq P$ and $\mathsf{E}\left[X_2^2\right] \leq P$. Similarly, applying the cutset bound with a cut between both transmitters and Receiver 1 on one side and Receiver 2 on the other side yields

$$\begin{aligned} R_2 &\leq \max I(X_1X_2;Y_2) \\ &= \frac{1}{2}\log\left(1+\frac{(1+a)^2P}{\sigma^2}\right). \end{aligned}$$

These two upper bounds establish the converse result in (31).

Equation (29) is established by the general Relation (85) and Proposition 8 in Section VIII-C.

We next establish Equation (32). Towards this end, we notice that for $a = 1$ and $\rho_z = 1$ the two output sequences $\{Y_{1,t}\}$ and $\{Y_{2,t}\}$ coincide. Therefore, whenever Receiver 1 can decode its message M_1 so can Receiver 2, and similarly whenever Receiver 2 can decode M_2 so can Receiver 1. Thus, for $a = 1$ and $\rho_z = 1$ the feedback capacity of our AWGN IC coincides with the feedback capacity of the AWGN MACs from both transmitters to one of the two receivers. Since these AWGN MACs have prelog 1 (with or without feedback) [13], [14], [15] Relation (32) follows.

We finally show that irrespective of the cross gain $a > 0$, for $\rho_z \in (-1, 1)$ the prelog is upper bounded by 1, i.e.,

$$\overline{\lim_{P\to\infty}} \frac{C_{\text{IC},\Sigma}(P,\sigma,\rho_z,a)}{\frac{1}{2}\log(1+P)} \leq 1, \quad \rho_z \in (-1,1). \tag{86}$$

Combined with (85) this establishes (30).

We prove (86) based on a genie-argument and a generalized Sato-MAC bound [16], similar to the upper bounds in [17], [18]. Our proof consists of the following three steps. In the first step, we consider a scenario where prior to transmission a genie reveals the symbols $U^n = Z_1^n - \frac{1}{a}Z_2^n$ to Receiver 1. This obviously can only increase the sum-capacity of our channel.

In the second step, we apply Sato's MAC-bound argument [16] to the *genie-aided AWGN IC* obtained in the first step:[6] we show that the capacity of this IC is included in the capacity of the MAC that results from the IC when Receiver 1 is required to decode both messages and Receiver 2 no message at all. The inclusion can be proved based on the following observation. Whenever Receiver 1 has successfully decoded Message M_1, then it can reconstruct the inputs X_1^n and also the outputs observed at Receiver 2:

$$Y_2^n = \frac{1}{a}(Y_1^n - X_1^n) + U^n. \tag{87}$$

Consequently, under this assumption it can decode Message M_2 in the same way as Receiver 2. This implies that for fixed encoding strategies applied at the two transmitters, the minimum probability of error in the MAC setup cannot exceed the minimum probability of error in the IC setup and proves the desired inclusion.

In the third step we show that the MAC to Receiver 1 has prelog no larger than 1. Combined with the previous two steps this yields the desired upper bound (86). Before elaborating on this third step, we recall some properties of the considered MAC: Its channel law is described by

$$Y_{1,t} = X_{1,t} + aX_{2,t} + Z_{1,t}, \quad t \in \{1,\dots,n\};$$

its two transmitters observe the generalized feedback signals $\{Y_{1,t}\}$ and $\{Y_{2,t}\}$; and before the transmission starts its receiver learns the genie-information U^n.

We now prove that the prelog of this MAC is upper bounded by 1. To this end we fix an arbitrary sequence of blocklength-n, rates-(R_1, R_2) coding schemes for the considered MAC such that the probability of error $\epsilon(n)$ tends to zero as n tends to infinity. Then, for every blocklength n we have:

$$\begin{aligned} &R_1 + R_2 \\ &\leq \frac{1}{n}I(M_1,M_2;Y_1^n,U^n) + \frac{\epsilon(n)}{n} \\ &= \frac{1}{n}I(M_1,M_2;Y_1^n|U^n) + \frac{\epsilon(n)}{n} \\ &= \frac{1}{n}\sum_{t=1}^n \Big(h(Y_{1,t}|Y_1^{t-1},U^n) \\ &\qquad -h(Y_{1,t}|Y_1^{t-1},M_1,M_2,U^n)\Big) + \frac{\epsilon(n)}{n} \\ &\leq \frac{1}{n}\sum_{t=1}^n \Big(h(Y_{1,t}|U_t) \\ &\qquad -h(Y_{1,t}|Y_1^{t-1},M_1,M_2,Y_2^{t-1},U^n)\Big) + \frac{\epsilon(n)}{n} \\ &= \frac{1}{n}\sum_{t=1}^n \Big(h(Y_{1,t}|U_t) - h(Y_{1,t}|X_{1,t},X_{2,t},U_t)\Big) \end{aligned}$$

[6] Unlike in Sato's setup, here both transmitters have feedback. As we shall see, Sato's MAC-bound argument applies unchanged also to feedback-setups, as the argument affects only the receivers.

$$= \frac{1}{n}\sum_{t=1}^{n} I(Y_{1,t}; X_{1,t}, X_{2,t}|U_t)$$
$$\leq \frac{1}{2}\log\left(1+\frac{(1+a)^2 P}{\sigma^2 \frac{1-\rho_z^2}{1+a^2-2a\rho_z}}\right)+\frac{\epsilon(n)}{n},$$

where the first inequality follows by Fano's inequality; the first equality follows by the independence of the genie-information U^n and the messages M_1 and M_2; the second inequality follows because conditioning cannot increase differential entropy and because the vector Y_2^{t-1} can be computed as a function of M_1, Y_1^{t-1}, and U^{t-1}, see (87); the third equality follows because the input $X_{1,t}$ is a function of the Message M_1 and the feedback outputs Y_1^{t-1}, and similarly $X_{2,t}$ is a function of M_2 and Y_2^{t-1}, and because of the Markov relation

$$(M_1, M_2, Y_1^{t-1}, Y_2^{t-1}, U^{t-1}, U_{t+1}^n) - (X_{1,t}, X_{2,t}, U_t) - Y_{1,t};$$

and the last inequality follows because the Gaussian distribution maximizes differential entropy under a covariance constraint. Since by assumption the probabilities of error $\epsilon(n)$ tend to 0 as $n \to \infty$ the sum-rate of the considered scheme must satisfy

$$R_1 + R_2 \leq \frac{1}{2}\log\left(1+\frac{(1+a)^2 P}{\sigma^2 \frac{(1-\rho_z^2)}{1+a^2-2a\rho_z}}\right),$$

and thus the sum-capacity of the MAC to Receiver 1

$$C_{\text{MAC},\Sigma}(P, \sigma^2, \rho_z, a) \leq \frac{1}{2}\log\left(1+\frac{(1+a)^2 P}{\sigma^2 \frac{(1-\rho_z^2)}{1+a^2-2a\rho_z}}\right).$$

It immediately follows that for $a > 0$ and $\rho_z \in (-1, 1)$ the prelog is upper bounded by 1, which concludes the third step and the proof of (86).

Acknowledgment

The authors thank Prof. Frans M. J. Willems, TU Eindhoven, for pointing them to [5], which inspired the investigation leading to this work. This work was supported in part by NSF grants CNS-0627024 and CCF-0830428.

Appendix

A. Proof of Lemma 2

Since for every $P > 0$ the parameter $\rho^*(P)$ lies in the interval $(0, 1)$:

$$\varliminf_{P\to\infty} P^{1-\epsilon}\left(1-\rho^*(P)\right) \geq 0, \quad \forall \epsilon > 0.$$

Thus, we have to prove that

$$\varlimsup_{P\to\infty} P^{1-\epsilon}\left(1-\rho^*(P)\right) \leq 0, \quad \forall \epsilon > 0. \tag{88}$$

To this end, we introduce for every $P > 0$ the parameter

$$g^*(P) \triangleq 1 - \rho^*(P), \tag{89}$$

which by (43) and (44)–(46) satisfies

$$0 = -\left(g^*(P)\right)^3 + \gamma_2(P)\left(g^*(P)\right)^2 + \gamma_1(P) g^*(P) + \gamma_0(P), \tag{90}$$

where

$$\gamma_2(P) = 3 - \frac{2\sigma_1\sigma_2}{P} - \frac{P+\sigma_1^2+\sigma_2^2+\rho_z\sigma_1\sigma_2}{\sqrt{P+\sigma_1^2}\sqrt{P+\sigma_2^2}} - \frac{2\sigma_1^2\sigma_2^2}{P\sqrt{P+\sigma_1^2}\sqrt{P+\sigma_2^2}}, \tag{91}$$

$$\gamma_1(P) = -2\left(1-\frac{P}{\sqrt{P+\sigma_1^2}\sqrt{P+\sigma_2^2}}\right) + \frac{(2+\rho_z)\sigma_1^2+(2+\rho_z)\sigma_2^2+2\rho_z\sigma_1\sigma_2}{\sqrt{P+\sigma_1^2}\sqrt{P+\sigma_2^2}} + \frac{\sigma_1^2+\sigma_2^2+4\sigma_1\sigma_2}{P} + \frac{\sigma_1\sigma_2(\sigma_1^2+4\sigma_1\sigma_2+\sigma_2^2)}{P\sqrt{P+\sigma_1^2}\sqrt{P+\sigma_2^2}}, \tag{92}$$

$$\gamma_0(P) = -\frac{\sigma_1^2+2\sigma_1\sigma_2+\sigma_2^2}{P}\left(1+\rho_z\frac{P}{\sqrt{P+\sigma_1^2}\sqrt{P+\sigma_2^2}}\right) - \frac{\sigma_1\sigma_2(\sigma_1^2+2\sigma_1\sigma_2+\sigma_2^2)}{P\sqrt{P+\sigma_1^2}\sqrt{P+\sigma_2^2}}. \tag{93}$$

Proving (88) is then equivalent to proving

$$\varlimsup_{P\to\infty} P^{1-\epsilon} g^*(P) \leq 0, \quad \forall \epsilon > 0. \tag{94}$$

We shall prove (94) by contradiction, and thus assume that there exists an $\epsilon > 0$ such that

$$\varlimsup_{P\to\infty} P^{1-\epsilon} g^*(P) > 0. \tag{95}$$

By our assumption, the parameter

$$\epsilon^* \triangleq \sup\left\{\epsilon : \varlimsup_{P\to\infty} P^{1-\epsilon} g^*(P) > 0\right\}, \tag{96}$$

is strictly positive, and we can choose an ϵ_1 in the open interval $(0, \epsilon^*)$.

In the rest of this appendix we show that under our assumption

$$\varlimsup_{P\to\infty} \Delta_{\text{BC}}(P) > 0, \tag{97}$$

where for each $P > 0$ we define

$$\Delta_{\text{BC}}(P) \triangleq P^{2-\epsilon^*-\epsilon_1}\Big(-(g^*(P))^3 + \gamma_2(P)(g^*(P))^2 + \gamma_1(P) g^*(P) + \gamma_0(P)\Big). \tag{98}$$

Inequality (97) implies that there exist (finite) values $P > 0$ for which $\Delta_{\text{BC}}(P) > 0$ and thus the cubic equation (90) is violated. This leads to the desired contradiction.

In the following we establish Inequality (97) by proving the following three limits

$$\varlimsup_{P\to\infty} P^{2-\epsilon^*-\epsilon_1}\left(-(g^*(P))^3 + \gamma_2(P)(g^*(P))^2\right) > 0, \tag{99}$$

$$\varlimsup_{P\to\infty} P^{2-\epsilon^*-\epsilon_1}\gamma_1(P) g^*(P) = 0, \tag{100}$$

$$\lim_{P\to\infty} P^{2-\epsilon^*-\epsilon_1}\gamma_0(P) = 0. \tag{101}$$

We first notice that

$$\lim_{P\to\infty} \gamma_2(P) = 2, \tag{102}$$

$$\lim_{P\to\infty} \gamma_1(P) = 0, \tag{103}$$

$$\lim_{P\to\infty} \gamma_0(P) = 0, \tag{104}$$

and thus by continuity the solutions to the cubic equation (90) tend to the solutions to the cubic equation $-g^3 + 2g^2 = 0$. Since for this latter equation $g = 0$ is the only solution in the interval $[0, 1]$, it must hold that

$$\lim_{P\to\infty} g^*(P) = 0. \tag{105}$$

Inequality (99) is then proved as follows. Since $\left(\frac{\epsilon^*+\epsilon_1}{2}\right) < \epsilon^*$ Definition (96) implies that

$$\overline{\lim_{P\to\infty}} \left(P^{1-\frac{\epsilon^*+\epsilon_1}{2}} g^*(P)\right) > 0, \tag{106}$$

which combined with limits (102) and (105) yields the desired inequality (99):

$$\begin{aligned}&\overline{\lim_{P\to\infty}} P^{2-\epsilon^*-\epsilon_1}\left(-(g^*(P))^3 + \gamma_2(P)(g^*(P))^2\right)\\ &= \overline{\lim_{P\to\infty}} \left(P^{1-\frac{\epsilon^*+\epsilon_1}{2}} g^*(P)\right)^2 (-g^*(P) + \gamma_2(P))\\ &> 0.\end{aligned}$$

To prove equations (100) and (101) we employ the following limit

$$\lim_{P\to\infty} P\left(1 - \frac{P}{\sqrt{P+\sigma_1^2}\sqrt{P+\sigma_2^2}}\right) = \frac{\sigma_1^2+\sigma_2^2}{2}, \tag{107}$$

which can be proved with Bernoulli-de l'Hôpital's rule. Since $(\epsilon^* + \epsilon_1) > 0$, Limit (107) combined with the definition of $\gamma_0(P)$ in (93) establishes Equation (101). Similarly, since $\epsilon_1 > 0$, Limit (107) combined with the definition of $\gamma_1(P)$ in (92) yields

$$\lim_{P\to\infty} P^{1-\frac{\epsilon_1}{2}} \gamma_1(P) = 0. \tag{108}$$

Moreover, since $(\epsilon^* + \frac{\epsilon_1}{2}) > \epsilon^*$ by the definition of ϵ^*:

$$\lim_{P\to\infty} P^{1-\epsilon^*-\epsilon_1/2} g^*(P) = 0, \tag{109}$$

which combined with (108) establishes the desired equality (100).

B. Proof of Lemma 3

The first part of the proof is analogous to the proof in Appendix A. Again, since for each $P > 0$ the parameter $\rho^*(P)$ lies in the interval $(0, 1)$ the lower bound

$$\underline{\lim_{P\to\infty}} P^{1-\epsilon}(1-\rho^*(P)) \geq 0, \quad \forall \epsilon > \max\left\{\frac{1-\beta}{2}, 0\right\}$$

trivially holds, and the interesting part is to prove

$$\overline{\lim_{P\to\infty}} P^{1-\epsilon}(1-\rho^*(P)) \leq 0, \quad \forall \epsilon > \max\left\{\frac{1-\beta}{2}, 0\right\}. \tag{110}$$

Define for every $P > 0$

$$g^*(P) \triangleq 1 - \rho^*(P),$$

which lies in $(0, 1)$ and by (43) and (44)–(46) satisfies

$$-(g^*(P))^3 + \gamma_2(P)(g^*(P))^2 + \gamma_1(P)g^*(P) + \gamma_0(P) = 0, \tag{111}$$

where in this appendix in the definitions of $\gamma_2(P)$, $\gamma_1(P)$, and $\gamma_0(P)$ (Definitions (91)–(93)) the correlation coefficient ρ_z should be replaced by $\rho_z(P)$. Instead of proving (110), we shall prove the equivalent limit

$$\underline{\lim_{P\to\infty}} P^{1-\epsilon} g^*(P) \leq 0, \quad \forall \epsilon > \max\left\{\frac{1-\beta}{2}, 0\right\}. \tag{112}$$

The proof is lead by contradiction. Thus, assume that there exists an $\epsilon > \max\left\{\frac{1-\beta}{2}, 0\right\}$ satisfying

$$\underline{\lim_{P\to\infty}} P^{1-\epsilon} g^*(P) > 0. \tag{113}$$

Under this assumption, the parameter

$$\epsilon^* \triangleq \sup\left\{\epsilon : \overline{\lim_{P\to\infty}} P^{1-\epsilon} g^*(P) > 0\right\}, \tag{114}$$

is larger than $\max\left\{\frac{1-\beta}{2}, 0\right\}$, and we can choose ϵ_1 in the open interval $\left(\max\left\{\frac{1-\beta}{2}, 0\right\}, \epsilon^*\right)$. To establish the desired contradiction, we prove that

$$\overline{\lim_{P\to\infty}} \Delta_{\text{BC},2}(P) > 0, \tag{115}$$

where we define

$$\begin{aligned}\Delta_{\text{BC},2}(P) \quad \triangleq \quad & P^{2-\epsilon^*-\epsilon_1}\Big(-(g^*(P))^3 + \gamma_2(P)(g^*(P))^2\\ &+\gamma_1(P)g^*(P) + \gamma_0(P)\Big).\end{aligned}$$

This implies that for some values $P > 0$ the term $\Delta_{\text{BC},2}(P) > 0$ and thus Equation (111) is violated, which leads to the desired contradiction.

Using similar steps as for the proof of Equations (99) and (100) in Appendix A, it can be shown that

$$\begin{aligned}\overline{\lim_{P\to\infty}} P^{2-\epsilon^*-\epsilon_1}\Big(&-(g^*(P))^3 + \gamma_2(P)(g^*(P))^2\\ &+\gamma_1(P)g^*(P)\Big) > 0.\end{aligned} \tag{116}$$

It therefore suffices to prove

$$\overline{\lim_{P\to\infty}} P^{2-\epsilon^*-\epsilon_1} \gamma_0(P) = 0, \tag{117}$$

in order to establish (115). Towards proving (117), we first rewrite $\gamma_0(P)$ as

$$\begin{aligned}\gamma_0(P) = &-\frac{\sigma_1^2 + 2\sigma_1\sigma_2 + \sigma_2^2}{P}\\ &\left(\left(1 - \frac{P}{\sqrt{P+\sigma_1^2}\sqrt{P+\sigma_2^2}}\right)\right.\\ &+ (1+\rho_z(P))\frac{P}{\sqrt{P+\sigma_1^2}\sqrt{P+\sigma_2^2}}\\ &\left.-\frac{\sigma_1\sigma_2}{P\sqrt{P+\sigma_1^2}\sqrt{P+\sigma_2^2}}\right),\end{aligned}$$

and notice that the following limit

$$\underline{\lim_{P\to\infty}} P^{(1-\epsilon^*-\epsilon_1)}\left(\left(1 - \frac{P}{\sqrt{P+\sigma_1^2}\sqrt{P+\sigma_2^2}}\right)\right.$$

$$+(1+\rho_z(P))\frac{P}{\sqrt{P+\sigma_1^2}\sqrt{P+\sigma_2^2}} - \frac{\sigma_1\sigma_2}{P\sqrt{P+\sigma_1^2}\sqrt{P+\sigma_2^2}}\Bigg) = 0, \tag{118}$$

directly leads to the desired result (117). We now prove Limit (118). Obviously, since $(\epsilon_1+\epsilon^*)>0$:

$$\varliminf_{P\to\infty} P^{1-\epsilon^*-\epsilon_1}\frac{\sigma_1\sigma_2}{P\sqrt{P+\sigma_1^2}\sqrt{P+\sigma_2^2}} = 0, \tag{119}$$

and by (107) also

$$\varliminf_{P\to\infty} P^{1-\epsilon^*-\epsilon_1}\left(1-\frac{P}{\sqrt{P+\sigma_1^2}\sqrt{P+\sigma_2^2}}\right) = 0. \tag{120}$$

Moreover, as we shall shortly see, by the definition of the parameter β, Equation (17), for all $\beta'<\beta$:

$$\varliminf_{P\to\infty} P^{\beta'}(1+\rho_z(P)) = 0, \tag{121}$$

and thus, since $(1-\epsilon^*-\epsilon_1)<\beta$:

$$\varliminf_{P\to\infty} P^{1-\epsilon^*-\epsilon_1}(1+\rho_z(P))\frac{P}{\sqrt{P+\sigma_1^2}\sqrt{P+\sigma_2^2}} = 0. \tag{122}$$

Combined with (119) and (120) this limit establishes (118) and thus (117), and concludes the proof.

We are left with proving Limit (121). By Equation (17), i.e.,

$$\beta = \varlimsup_{P\to\infty}\frac{-\log(1+\rho_z(P))}{\log(P)}$$

there exists for every $\epsilon'>0$ an unbounded increasing sequence $\{P_k\}_{k\in\mathbb{N}}$ such that

$$(\beta-\epsilon')\log(P_k) \le -\log(1+\rho_z(P_k)), \quad k\in\mathbb{N},$$

i.e., such that

$$P_k^{-\epsilon'} \ge P^{\beta-2\epsilon'}(1+\rho_z(P_k)), \quad k\in\mathbb{N}. \tag{123}$$

Since the sequence $P_k^{-\epsilon'}$ tends to 0 as $k\to\infty$ and since the right-hand side of (123) is nonnegative for $k\in\mathbb{N}$, we can conclude that

$$\lim_{k\to\infty} P^{\beta-2\epsilon'}(1+\rho_z(P_k)) = 0.$$

Finally, since this argument holds for any $\epsilon'>0$, Limit (121) is established.

C. Proof of Lemma 5

The proof of Lemma 5 is similar to the proof of Lemma 2 in Appendix A.

Again, since for every $P>0$ the parameter $\rho^*_{\text{IC}}(P)$ lies in the interval $(0,1)$ we have to prove that

$$\varlimsup_{P\to\infty} P^{1-\epsilon}(1-\rho^*_{\text{IC}}(P)) \le 0, \quad \forall\epsilon>0. \tag{124}$$

To this end, we introduce for every $P>0$ the parameter

$$g^*_{\text{IC}}(P) \triangleq 1-\rho^*_{\text{IC}}(P), \tag{125}$$

which by (78) and (79)—(82) satisfies

$$(g^*_{\text{IC}}(P))^4+\delta_3(P)(g^*_{\text{IC}}(P))^3 +\delta_2(P)(g^*_{\text{IC}}(P))^2+\delta_1(P)g^*(P)+\delta_0(P)=0, \tag{126}$$

where

$$\delta_3(P) \triangleq -4-\frac{\sigma^2}{2aP}, \tag{127}$$

$$\delta_2(P) \triangleq 4-\frac{\sigma^2(4+a\rho_z-3a)}{2a^2P} = 4-\frac{2\sigma^2(1-a)}{a^2P}, \tag{128}$$

$$\delta_1(P) \triangleq \frac{\sigma^2(-a^2+2a^2\rho_z+8a+2a\rho_z+1)}{2a^3P}+\frac{\sigma^4}{a^3P^2} = \frac{\sigma^2(-3a^2+6a+1)}{2a^3P}+\frac{\sigma^4}{a^3P^2}, \tag{129}$$

$$\delta_0(P) \triangleq -\frac{\sigma^2(1+\rho_z)(1+2a+a^2)}{2a^3P}-\frac{\sigma^4}{a^3P^2} = -\frac{\sigma^4}{a^3P^2}, \tag{130}$$

where in (128)–(130) we used that $\rho_z=-1$. Proving (124) is then equivalent to proving

$$\varlimsup_{P\to\infty} P^{1-\epsilon}g^*_{\text{IC}}(P) \le 0, \quad \forall\epsilon>0. \tag{131}$$

We shall prove (131) by contradiction, and thus assume that there exists an $\epsilon>0$ such that

$$\varlimsup_{P\to\infty} P^{1-\epsilon}g^*_{\text{IC}}(P) > 0. \tag{132}$$

By this assumption, the parameter

$$\epsilon^* \triangleq \sup\left\{\epsilon : \varlimsup_{P\to\infty} P^{1-\epsilon}g^*_{\text{IC}}(P)>0\right\}, \tag{133}$$

is strictly positive, and we can choose an ϵ_1 in the open interval $(0,\epsilon^*)$.

In the rest of this appendix we prove that

$$\varlimsup_{P\to\infty} P^{2-\epsilon^*-\epsilon_1}\Delta_{\text{IC}}(P) > 0, \tag{134}$$

where we define for each $P>0$:

$$\Delta_{\text{IC}}(P) \triangleq (g^*_{\text{IC}}(P))^4+\delta_3(P)(g^*_{\text{IC}}(P))^3 +\delta_2(P)(g^*_{\text{IC}}(P))^2+\delta_1(P)g^*_{\text{IC}}(P)+\delta_0(P).$$

Inequality (134) implies that there exist (finite) values $P>0$ such that $\Delta_{\text{IC}}>0$ and thus the quartic equation (126) is violated. This leads to the desired contradiction.

We prove (134) by establishing the following three inequalities:

$$\varlimsup_{P\to\infty}\Bigg(P^{2-\epsilon^*-\epsilon_1}\left((g^*_{\text{IC}})^4+\delta_3(P)(g^*_{\text{IC}}(P))^3\right) +\delta_2(P)(g^*_{\text{IC}}(P))^2\Bigg) > 0, \tag{135}$$

$$\varlimsup_{P\to\infty} P^{2-\epsilon^*-\epsilon_1}\delta_1(P)g^*_{\text{IC}}(P) = 0, \tag{136}$$

$$\varlimsup_{P\to\infty} P^{2-\epsilon^*-\epsilon_1}\delta_0(P) = 0. \tag{137}$$

To this end, we first notice that

$$\lim_{P\to\infty}\delta_3(P) = -4, \tag{138}$$

$$\lim_{P\to\infty}\delta_2(P) = 4, \tag{139}$$

$$\lim_{P\to\infty} \delta_1(P) = 0, \quad (140)$$
$$\lim_{P\to\infty} \delta_0(P) = 0, \quad (141)$$

and thus the solutions to the quartic equation (126) tend to the solutions to the quartic equation $g^4 - 4g^3 + 4g^2 = 0$. Since $g = 0$ is the only solution in the interval $[0, 1]$ to this latter quartic equation, we obtain:

$$\lim_{P\to\infty} g^*_{\text{IC}}(P) = 0. \quad (142)$$

Inequality (135) can then be proved as follows. Since $\frac{\epsilon^*+\epsilon_1}{2} < \epsilon^*$,

$$\overline{\lim_{P\to\infty}} P^{1-\frac{\epsilon^*+\epsilon_1}{2}} g^*(P) > 0, \quad (143)$$

which can be combined with (138), (139), and (142) to establish Inequality (135):

$$\begin{aligned}
&\overline{\lim_{P\to\infty}} P^{2-\epsilon^*-\epsilon_1}\Big((g^*_{\text{IC}}(P))^4 \\
&\qquad\qquad +\delta_3(P)(g^*_{\text{IC}}(P))^3 + \delta_2(P)(g^*_{\text{IC}}(P))^2\Big) \\
&= \overline{\lim_{P\to\infty}} \left(P^{1-\frac{\epsilon^*+\epsilon_1}{2}} g^*_{\text{IC}}(P)\right)^2 \\
&\qquad \cdot \left((g^*_{\text{IC}}(P))^2 + \delta_3(P) g^*_{\text{IC}}(P) + \delta_2(P)\right) \\
&> 0. \quad (144)
\end{aligned}$$

Equation (136) is proved by combining the following two limits. Since $\frac{\epsilon_1}{2} > 0$, by the definition of $\delta_1(P)$ in (129) we have

$$\overline{\lim_{P\to\infty}} P^{1-\frac{\epsilon_2}{2}} \delta_1(P) = 0,$$

and since $\left(\epsilon^* + \frac{\epsilon_1}{2}\right) > \epsilon^*$, by the definition of ϵ^* we have:

$$\overline{\lim_{P\to\infty}} P^{1-\epsilon^*-\frac{\epsilon_1}{2}} g^*(P) = 0.$$

Finally, Equation (137) follows immediately by the definition of $\delta_0(P)$ in (130) and because $\epsilon^*, \epsilon_1 > 0$. This concludes the proof.

References

[1] T. M. Cover and B. Gopinath, *Open problems in communication and computation*, Springer Verlag, New York, 1987.

[2] P. Algoet and J. Cioffi, "The capacity of a channel with Gaussian noise and intersymbol interference," in *Proc. of ISIT 91*, Budapest, Hungary, June 1991, p. 16.

[3] L. H. Ozarow, *Coding and Capacity for Additive White Gaussian Noise Multi-user Channels with Feedback*, Ph.D. thesis, Massachusetts Institute of Technology, Cambridge, MA, 1979.

[4] L. H. Ozarow and C. S. K. Leung., "An achievable region and outer bound for the Gaussian broadcast channel with feedback," *IEEE Transactions on Information Theory*, vol. IT–30, pp. 667–671, July 1984.

[5] F. M. J. Willems and E. C. van der Meulen, "Een verbetering en veralgemening van het transmissiegebied van Ozarow voor het gaussische broadcast kanaal met feedback," in *Tweede Symposium over Informatietheorie in de Benelux*, Zoetermeer, The Netherlands, May 1981, pp. 129–138, In Dutch.

[6] Y.-H. Kim, A. Lapidoth, and T. Weissman, "Bounds on the error exponent of the AWGN channel with AWGN corrupted feedback," in *Proc. IEEE 24th Convention of Electrical and Electronics Engineers in Israel*, Eilat, Israel, Nov 2006, pp. 184–188.

[7] J. P. M. Schalkwijk and T. Kailath, "A coding scheme for additive noise channels with feedback—Part I: No bandwidth constraint," *IEEE Transactions on Information Theory*, vol. IT–12, pp. 172–182, April 1966.

[8] G. Kramer, "Feedback strategies for white Gaussian interference networks," *IEEE Transactions on Information Theory*, vol. 48, no. 6, pp. 1423–1437, June 2002.

[9] N. Devroye and M. Sharif, "The multiplexing gain of mimo x-channels wiht partial transmit side information," in *Proc. of ISIT 2007*, Nice, France, June 2007.

[10] P. Bergmans, "A simple converse for broadcast channels with additive white Gaussian noise," *IEEE Transactions on Information Theory*, vol. IT–20, no. 2, pp. 279–280, Mar 1974.

[11] A. El Gamal and Y.-H. Kim, "Lecture notes in multi-user information theory," .

[12] T. M. Cover and J. A. Thomas, *Elements of Information Theory*, Wiley, New York, 2nd edition, 2006.

[13] L. H. Ozarow, "The capacity of the white Gaussian multiple access channel with feedback," *IEEE Transactions on Information Theory*, vol. IT–30, no. 4, pp. 623–629, July 1984.

[14] A. D. Wyner, "Recent results in the Shannon theory," vol. 20, pp. 2–10, Jan. 1974.

[15] T. M. Cover, "Some advances in broadcast channels," in *Advances in Communication Systems*, A. Viterbi, Ed., vol. 4. San Francisco: Academic Press, 1975.

[16] H. Sato, "The capacity of the Gaussian interference channel under strong interference," *IEEE Transactions on Information Theory*, vol. IT–27, no. 6, pp. 786–788, November 1981.

[17] A. Lapidoth, S. Shamai (Shitz), and M. A. Wigger, "On cognitive interference networks," in *IEEE Information Theory Workshop*, Lake Tahoe, USA, September 2007, pp. 325–330.

[18] A. Lapidoth, N. Levy, S. Shamai (Shitz), and M. A. Wigger, "A cognitive interference network with clustered decoding," in *Proc. of ISIT 09*, Seoul, Korea, June/July 2009, pp. 198–202.