Noisy Feedback Is Strictly Better Than No Feedback on the Gaussian Multiple-Access Channel

Michèle Wigger
joint work with Amos Lapidoth

ETH Zurich
{wigger, lapidoth}@isi.ee.ethz.ch

Wien, 6 September 2006

Thanks to Michael Gastpar and Gerhard Kramer

Contribution

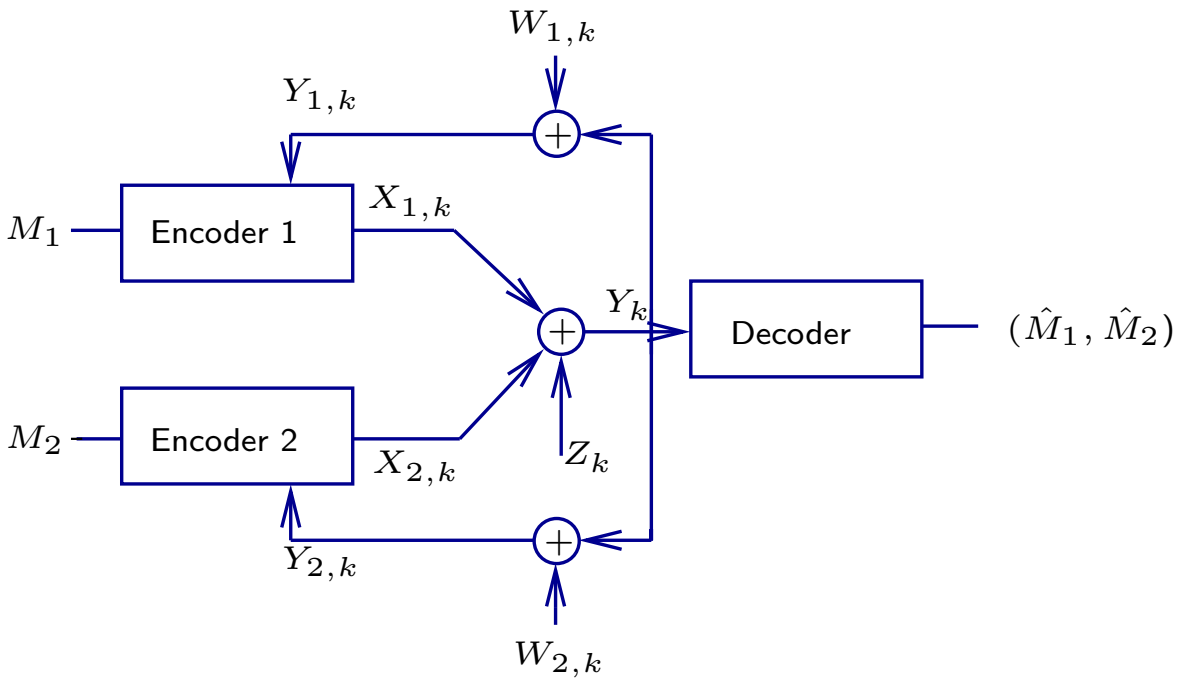

A coding scheme achieving

- $R_{\text{sum}}(\sigma^2) > C_{\text{NoFB,sum}}$ (strictly)
- $\lim_{\sigma^2 \downarrow 0} R_{\text{sum}}(\sigma^2) = C_{\text{PFB,sum}}$

Introduction

- Even for memoryless MACs noiseless feedback can increase capacity (Gaarder&Wolf'73)
- With noisy feedback can do at least as well as without:

$$C_{\text{NoisyFB}} \geq C_{\text{NoFB}}$$

- Can one do strictly better than without?
- We'll study the Gaussian MAC

Gaussian MAC without Feedback

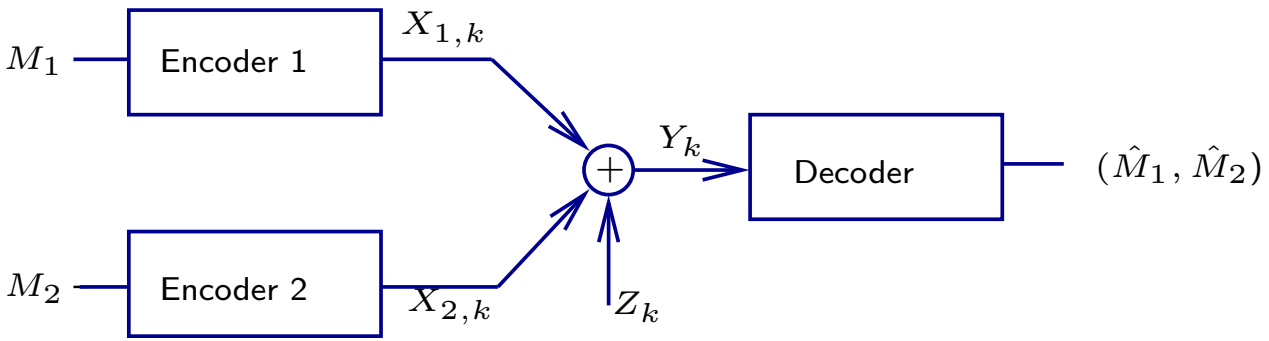

$Y_k = x_{1,k} + x_{2,k} + Z_k,$ where $Z_k \sim$ IID $\mathcal{N}_{\mathbb{R}}(0, \mathcal{N})$

Power constraints $\frac{1}{n}\sum_{k=1}^{n} \mathsf{E}\left[(x_{\nu,k}(M_\nu))^2\right] \leq \mathcal{P}, \quad$ for users $\nu = 1, 2$

$$\mathcal{C}_{\text{NoFB,sum}} = \frac{1}{2}\log\left(1 + \frac{2\mathcal{P}}{\mathcal{N}}\right)$$

Perfect Feedback

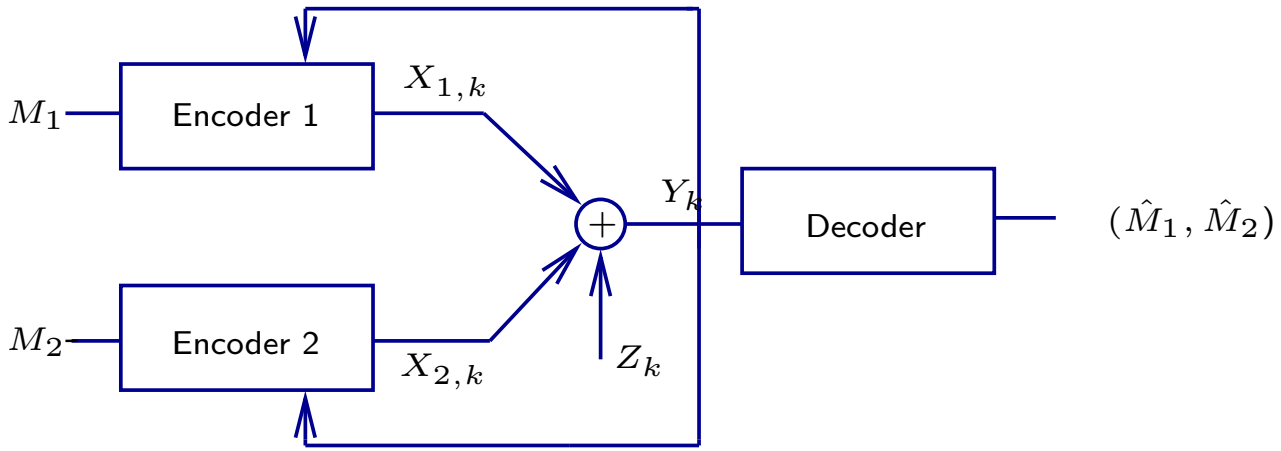

$$Y_k = x_{1,k} + x_{2,k} + Z_k, \qquad \text{where } Z_k \sim \text{IID } \mathcal{N}_{\mathbb{R}}(0, \mathcal{N})$$

Power constraints

$$\frac{1}{n}\sum_{k=1}^{n} \mathsf{E}\left[\left(x_{\nu,k}(M_\nu, \mathbf{Y}_1^{k-1})\right)^2\right] \leq \mathsf{P} \quad \text{for users } \nu = 1, 2$$

Perfect Feedback

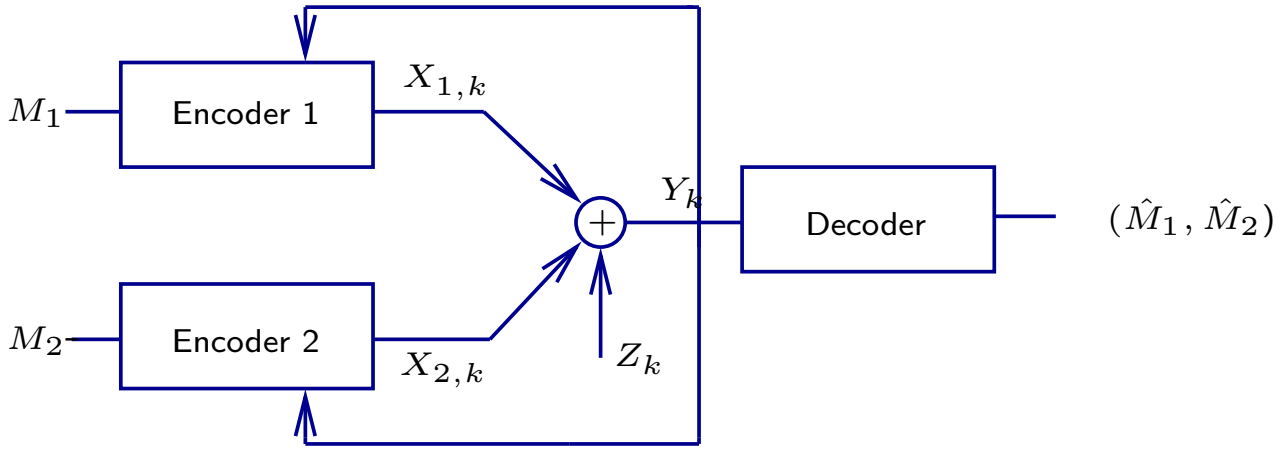

Ozarow'84:

$$\mathrm{C}_{\mathsf{PFB,sum}} = \frac{1}{2}\log\left(1 + \frac{2\mathrm{P}(1+\rho_{\mathsf{Oz}})}{\mathrm{N}}\right)$$

where

$$\mathrm{N}(\mathrm{N} + 2\mathrm{P}(1+\rho_{\mathsf{Oz}})) = (\mathrm{N} + \mathrm{P}(1-\rho_{\mathsf{Oz}}^2))^2$$

Perfect Feedback

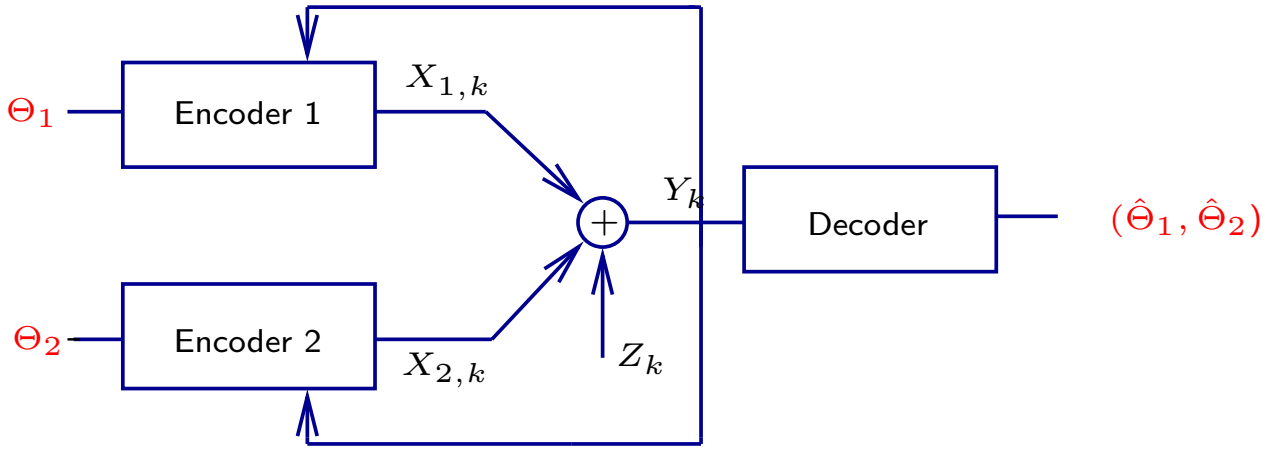

Capacity achieving Coding Scheme:

- Map M_1 and M_2 onto points in $[-\frac{1}{2}, \frac{1}{2}[$: $\Theta_1(M_1)$ and $\Theta_2(M_2)$.
- Linear encoding strategies
- LMMSE-estimation at decoder

Noisy Feedback

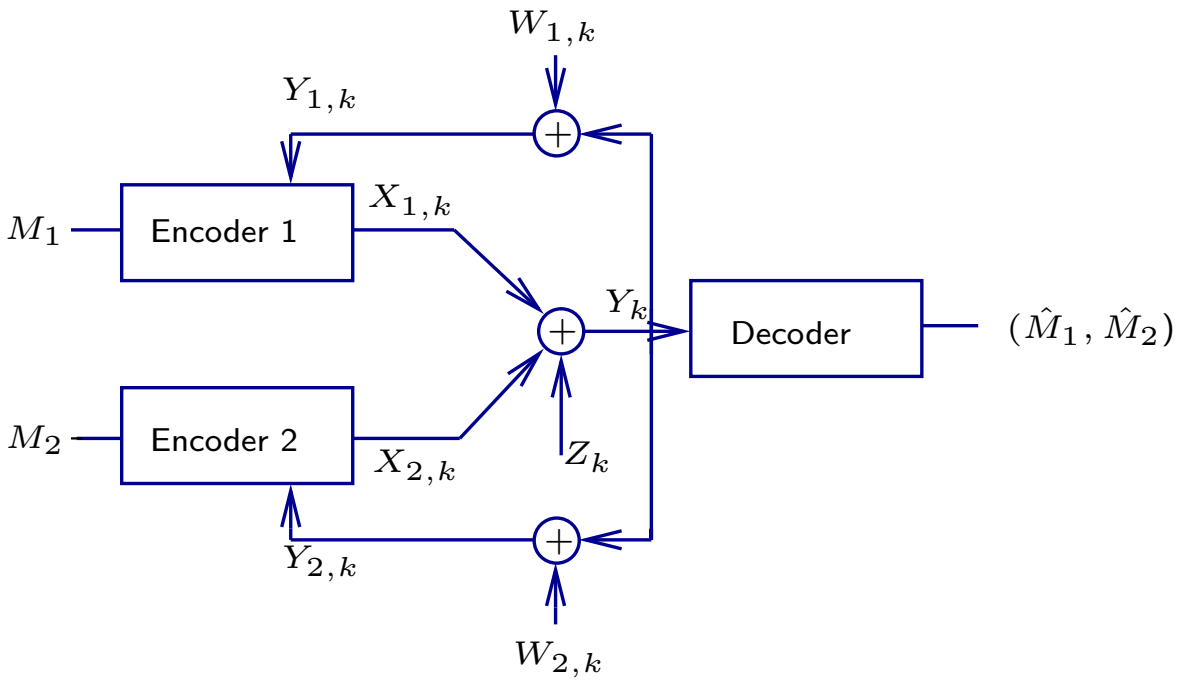

$$Y_k = x_{1,k} + x_{2,k} + Z_k \qquad Y_{\nu,k} = Y_k + W_{\nu,k} \quad \nu = 1, 2$$

$$\{Z_k\} \text{ IID } \sim \mathcal{N}_{\mathbb{R}}(0, \mathcal{N}), \quad \{W_{1,k}\} \text{ and } \{W_{2,k}\} \sim \text{ IID } \mathcal{N}_{\mathbb{R}}\left(0, \sigma^2\right)$$

$$\frac{1}{n}\sum_{k=1}^{n} \mathsf{E}\left[\left(x_{\nu,k}(M_\nu, \mathbf{Y}_{\nu,1}^{k-1})\right)^2\right] \leq \mathrm{P} \quad \nu = 1, 2$$

Noisy Feedback

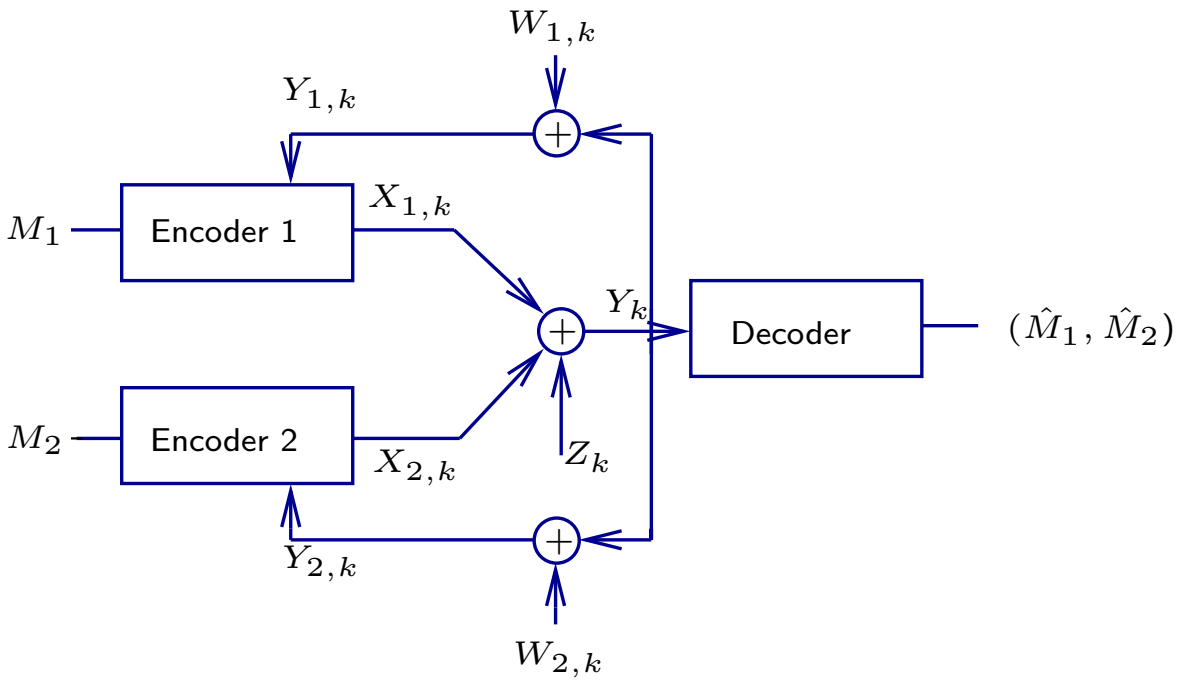

- Inner bounds (Carleial'82, Willems'82, Gastpar'05)
- Strictly better than $\mathsf{C}_{\mathsf{NoFB}}$ only for σ^2 smaller than some threshold depending on $(\mathcal{P}, \mathcal{N})$
- Outer bound (Gastpar&Kramer'06)

Main Result

Theorem

In our scheme for $0 < \mathrm{P}, \mathcal{N} < \infty$

$$R_{\mathsf{sum}}(\sigma^2) \quad > \quad \mathrm{C}_{\mathsf{NoFB,sum}} \quad \forall \sigma^2 < \infty \quad (strictly)$$

and

$$\lim_{\sigma^2 \downarrow 0} R_{\mathsf{sum}}(\sigma^2) \quad = \quad \mathrm{C}_{\mathsf{PFB,sum}}$$

Structure of the Concatenated Scheme

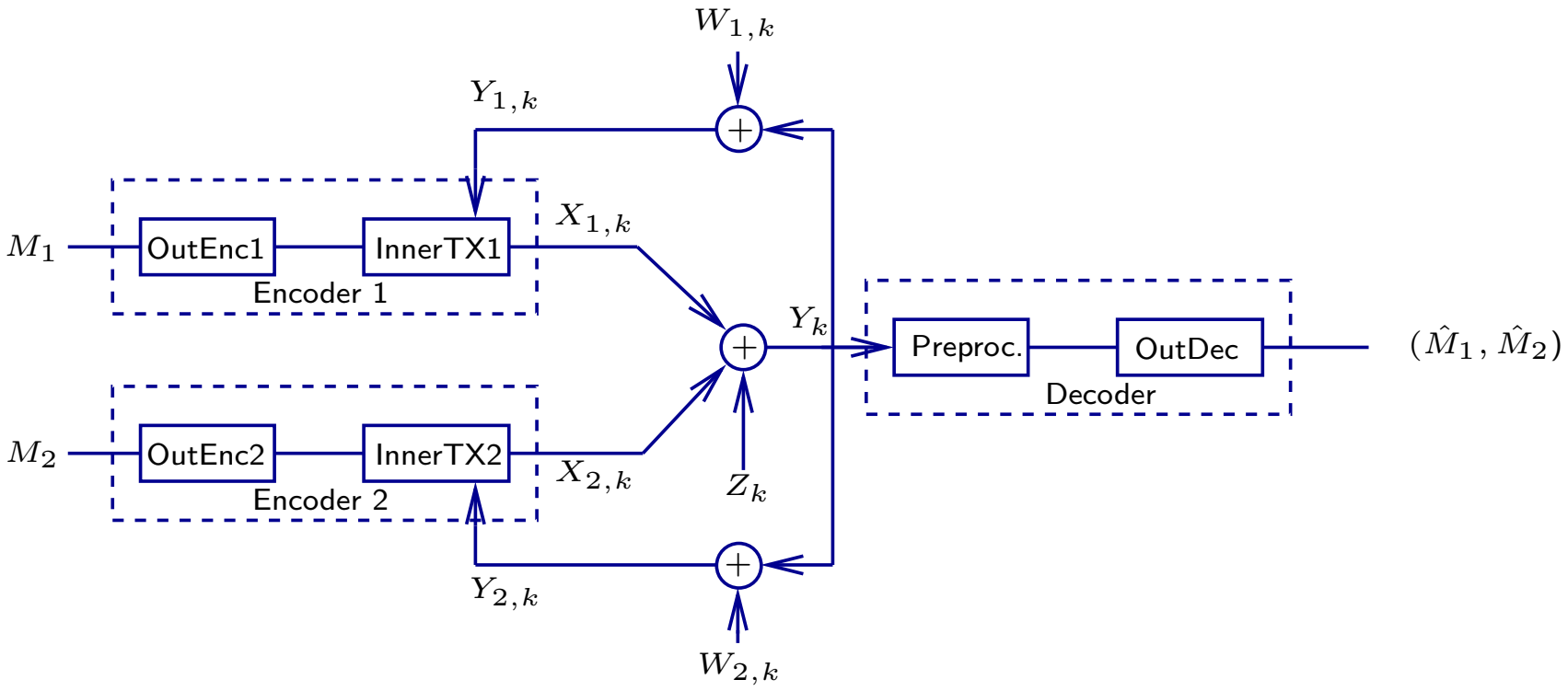

- Outer code ignores feedback
- Inner TX uses feedback

Structure of the Concatenated Scheme

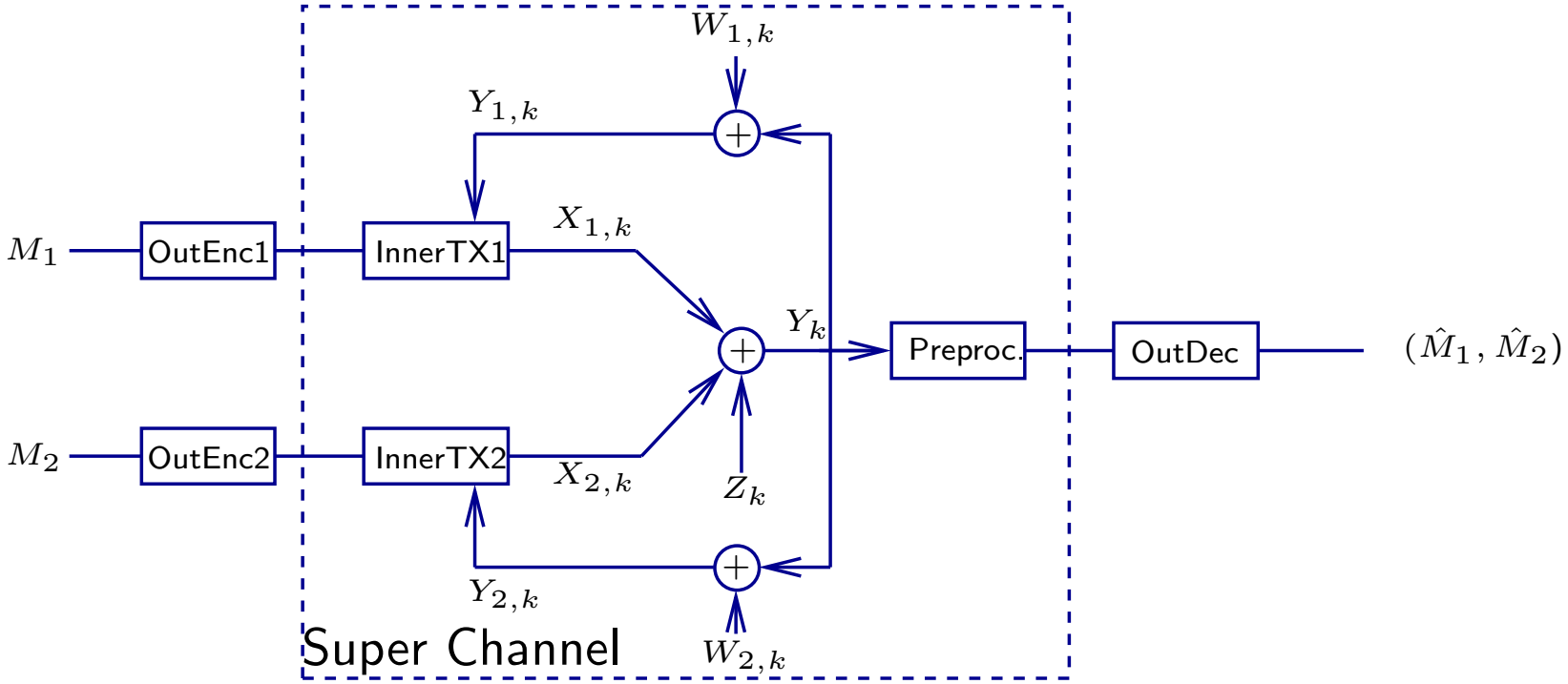

- "super channel": inner TXs, η channel uses, preprocessor
- Outer Code:
  - "sees" a memoryless MAC without feedback
  - code to achieve $C_{\text{sum}}^{(\eta)}$("super channel")
- $\Longrightarrow R_{\text{sum}}^{(\eta)} = \frac{1}{\eta} C_{\text{sum}}^{(\eta)}$("super channel")

Structure of the Concatenated Scheme

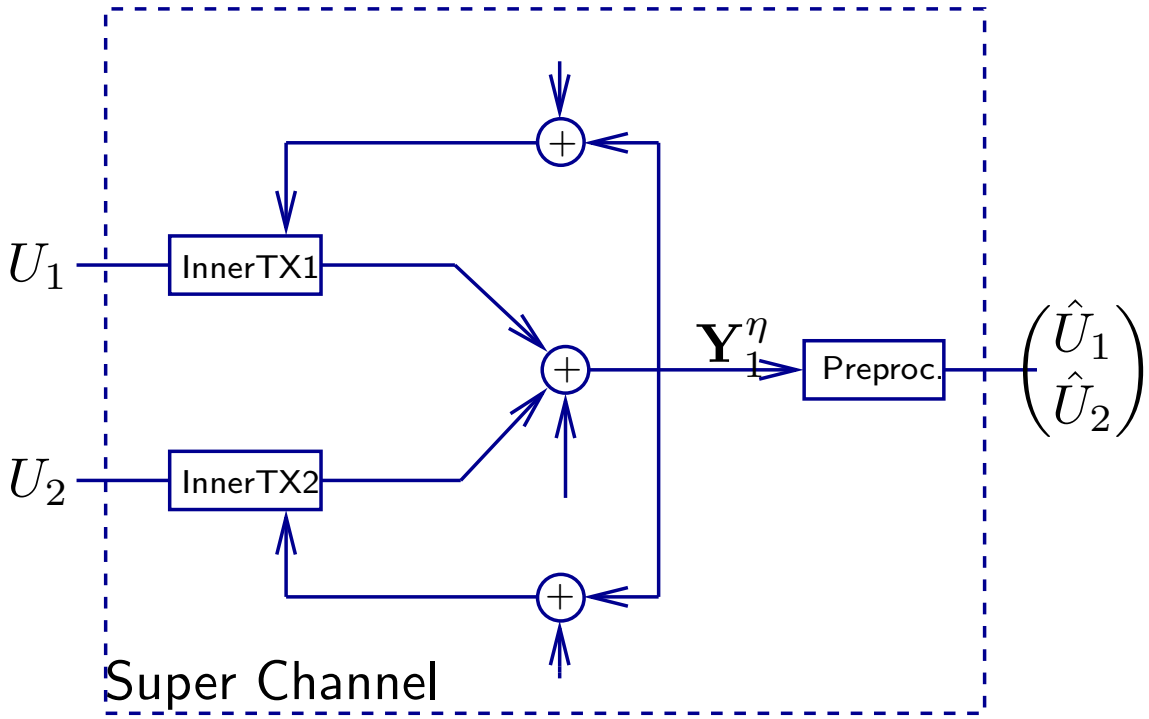

- "super channel": η uses per single (U_1, U_2) of MAC with noisy FB
- $(\hat{U}_1, \hat{U}_2)$: LMMSE-estimates based on $\mathbf{Y}_1^\eta$
- maximize $C_{\text{sum}}^{(\eta)}$("super channel"), i.e. $I(U_1, U_2; \hat{U}_1, \hat{U}_2)$

Example for $\eta = 2$, Inner Transmitters

- Sending (U_1, U_2)
- At time 1

$$X_{1,1} = U_1$$
$$X_{2,1} = U_2$$

- with outputs

$$Y_1 = U_1 + U_2 + Z_1$$
$$Y_{\nu,1} = U_1 + U_2 + Z_1 + W_{\nu,1}, \qquad \text{for } \nu = 1, 2.$$

Example for $\eta = 2$, Inner Transmitters

- At time 2

$$X_{1,2} = \lambda_2 \left(U_1 - c_1 Y_{1,1}\right)$$
$$X_{2,2} = -\lambda_2 \left(U_2 - c_1 Y_{2,1}\right)$$

where $\lambda_2 = \sqrt{\frac{\mathrm{P}}{(1-c_1)^2\mathrm{P}+c_1^2(\mathrm{P}+\mathrm{N}+\sigma^2)}}$.

- $$Y_2 = \lambda_2 \left(U_1 - U_2 - c_1(W_{1,1} - W_{2,1})\right) + Z_2$$

Example for $\eta = 2$, Inner Transmitters

- At time 2

$$X_{1,2} = \lambda_2 \left(U_1 - c_1 Y_{1,1}\right)$$
$$X_{2,2} = -\lambda_2 \left(U_2 - c_1 Y_{2,1}\right)$$

where $\lambda_2 = \sqrt{\frac{\mathrm{P}}{(1-c_1)^2\mathrm{P}+c_1^2(\mathrm{P}+\mathrm{N}+\sigma^2)}}$.

- $$Y_2 = \lambda_2 \left(U_1 - U_2 - c_1(W_{1,1} - W_{2,1})\right) + Z_2$$

- Note the modulation at encoder 2!

Example for $\eta = 2$, Choice of c_1

- Maximize $I(U_1, U_2; \hat{U}_1, \hat{U}_2)$over c_1:

$$c_1^\star = \frac{\mathsf{E}[U_1 \cdot Y_{1,1}]}{\mathsf{Var}(Y_{1,1}) + 2\sigma^2 \frac{\mathrm{P}}{\mathcal{N}}} = \frac{\mathsf{E}[U_2 \cdot Y_{2,1}]}{\mathsf{Var}(Y_{2,1}) + 2\sigma^2 \frac{\mathrm{P}}{\mathcal{N}}}.$$

Example for $\eta = 2$, Choice of c_1

- Maximize $I(U_1, U_2; \hat{U}_1, \hat{U}_2)$over c_1:

$$c_1^\star = \frac{\mathsf{E}[U_1 \cdot Y_{1,1}]}{\mathsf{Var}(Y_{1,1}) + 2\sigma^2 \frac{\mathrm{P}}{\mathcal{N}}} = \frac{\mathsf{E}[U_2 \cdot Y_{2,1}]}{\mathsf{Var}(Y_{2,1}) + 2\sigma^2 \frac{\mathrm{P}}{\mathcal{N}}}.$$

- Remark1: Maximizing coefficient is not LMMSE-estimation coefficient.

Example for $\eta = 2$, Choice of c_1

- Maximize $I(U_1, U_2; \hat{U}_1, \hat{U}_2)$over c_1:

$$c_1^\star = \frac{\mathsf{E}[U_1 \cdot Y_{1,1}]}{\mathsf{Var}(Y_{1,1}) + 2\sigma^2 \frac{\mathrm{P}}{\mathcal{N}}} = \frac{\mathsf{E}[U_2 \cdot Y_{2,1}]}{\mathsf{Var}(Y_{2,1}) + 2\sigma^2 \frac{\mathrm{P}}{\mathcal{N}}}.$$

- Remark1: Maximizing coefficient is not LMMSE-estimation coefficient.
- Remark2: If receiver knows $\{W_{1,k}\}, \{W_{2,k}\}$, $c_1^\star$ is LMMSE-estimation coefficient

Example for $\eta = 2$, Performance

$$R_{\mathsf{sum}}^{(2)}(\sigma^2) = \frac{1}{2}\log\left(1+\frac{2\mathrm{P}}{\mathcal{N}}\right) + \frac{1}{4}\log\left(1+\frac{2\mathrm{P}^2}{(2\mathrm{P}+\mathcal{N})\left(\mathrm{P}+\mathcal{N}+\sigma^2+\frac{2\mathrm{P}}{\mathcal{N}}\sigma^2\right)}\right)$$

$$R_{\mathsf{sum}}^{(2)}(\sigma^2) > \mathrm{C}_{\mathsf{NoFB,sum}} \qquad \forall\sigma^2$$

Inner TXs, general η

Inner Transmitters:

- Sending (U_1, U_2)
- At time k where $k \in \{1, \ldots, \eta\}$:

$$X_{1,k} = \lambda_k \left(U_1 - \sum_{i=1}^{k-1} c_i Y_{1,i} \right)$$

$$X_{2,k} = (-1)^{k-1} \lambda_k \left(U_2 - \sum_{i=1}^{k-1} (-1)^{i-1} c_i Y_{2,i} \right)$$

Inner TXs, general η

Inner Transmitters:

- Sending (U_1, U_2)
- At time k where $k \in \{1, \ldots, \eta\}$:

$$X_{1,k} = \lambda_k \left(U_1 - \sum_{i=1}^{k-1} c_i Y_{1,i} \right)$$

$$X_{2,k} = (-1)^{k-1} \lambda_k \left(U_2 - \sum_{i=1}^{k-1} (-1)^{i-1} c_i Y_{2,i} \right)$$

- Modulate the second input by $+1$ or -1.
- Modified version of Ozarow's encoding scheme.

Choice of $\eta(\sigma^2)$ and Convergence for $\sigma^2 \downarrow 0$

- $R_{\mathsf{sum}}(\sigma^2)$: Choose $\eta(\sigma^2)$ decreasing for increasing σ^2
- Choose $\eta(\sigma^2)$ to be the better of $\eta = 2$ or something exceeding

$$\sup_{\eta \geq 2} \left(R_{\mathsf{sum}}^{(\eta)}(\sigma^2) \right) - \sigma^2$$

Choice of $\eta(\sigma^2)$ and Convergence for $\sigma^2 \downarrow 0$

- $R_{\text{sum}}(\sigma^2)$: Choose $\eta(\sigma^2)$ decreasing for increasing σ^2
- Choose $\eta(\sigma^2)$ to be the better of $\eta = 2$ or something exceeding

$$\sup_{\eta \geq 2} \left(R_{\text{sum}}^{(\eta)}(\sigma^2) \right) - \sigma^2$$

So that

$$\lim_{\sigma^2 \downarrow 0} R_{\text{sum}}^{(\eta(\sigma^2))}(\sigma^2) = \mathsf{C}_{\text{PFB,sum}}$$

Comparison to other known bounds on the Sum-Capacity

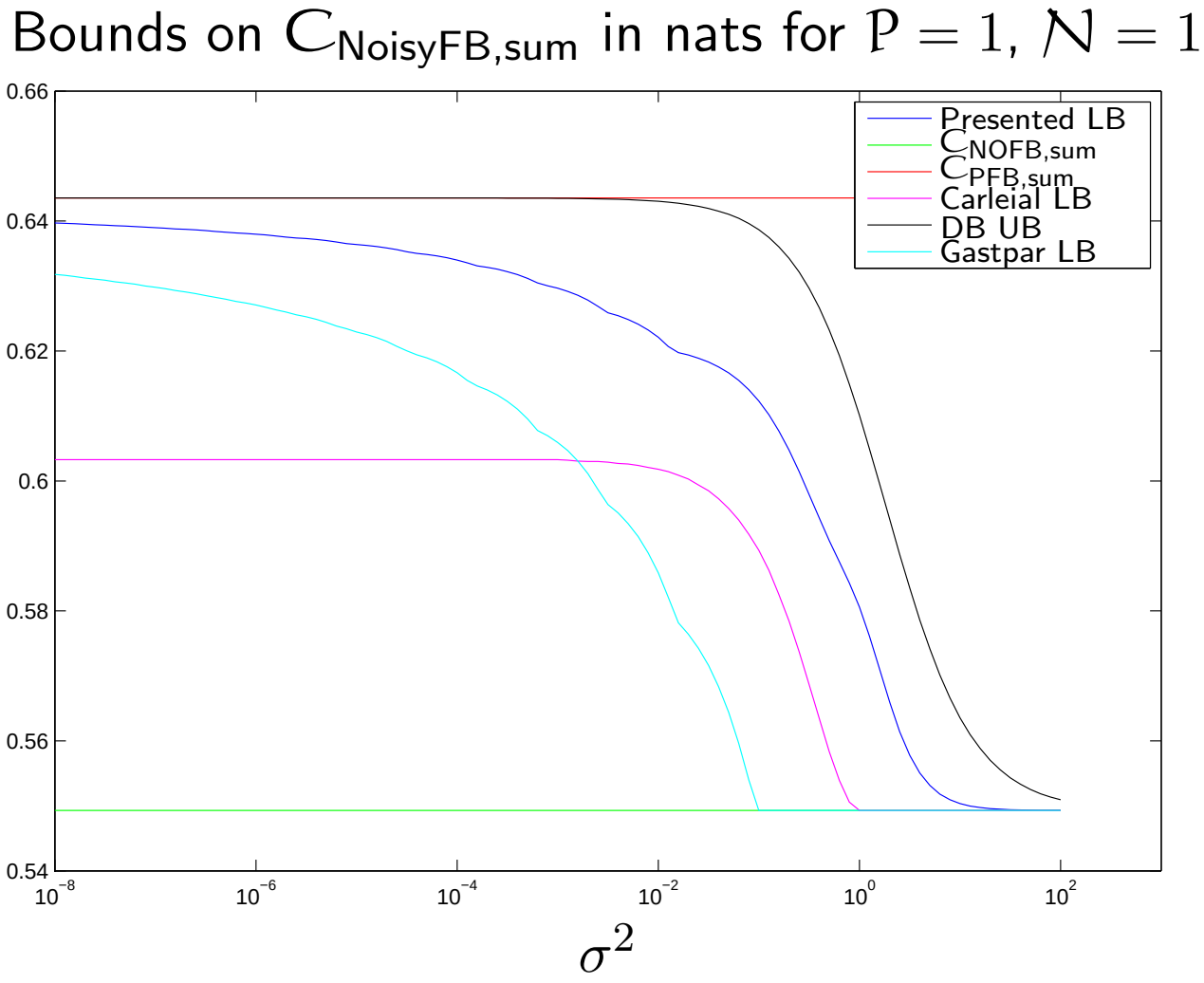

Summary

In our scheme for $0 < \mathcal{P}, \mathcal{N} < \infty$

$$R_{\mathsf{sum}}(\sigma^2) \quad > \quad \mathsf{C}_{\mathsf{NoFB,sum}} \quad \forall \sigma^2 < \infty$$

and

$$\lim_{\sigma^2 \downarrow 0} R_{\mathsf{sum}}(\sigma^2) \quad = \quad \mathsf{C}_{\mathsf{PFB,sum}}$$