Content Distribution Networks MN905

Michèle Wigger

Problem Set 1, November 2024

Exercise 1 ***A Small Caching Problem***

Consider the following network with a single server and three users 1, 2, 3. There are also two access points (AP) with cache memories Z_1 and Z_2 that can be filled during the caching phase. Each of these cache memories can store FM bits.

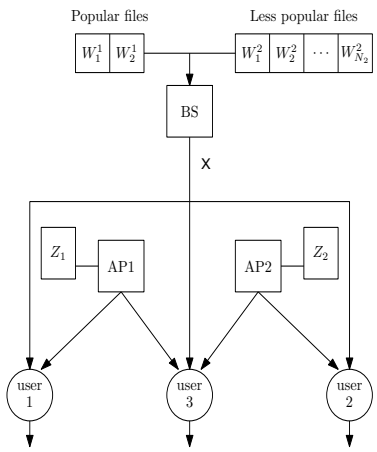

The server (BS) has a library with 2 popular files W_1^1 and W_2^1 and N_2 less popular files $W_1^2, W_2^2, \ldots, W_{N_2}^2$. Each of these files consists of F bits.
We assume the following for the delivery phase communication:

- Users 1 and 2 will each demand a popular file. User 3 demands a less popular file.
- User 1 has access to the AP1's cache content Z_1 and User 2 has access to AP2's cache content Z_2. Users 3 has access to *both* APs' cache contents Z_1 and Z_2.

The users' demands d_1, d_2, d_3 will be revealed to all three users as well as to the BS. Depending on these demands, during the delivery phase, the BS sends FR bits X noiselessly to all three users.
You will show in this exercise that the fundamental rate-memory tradeoff $R^\star(M)$ of this setup is as depicted in the following figure:

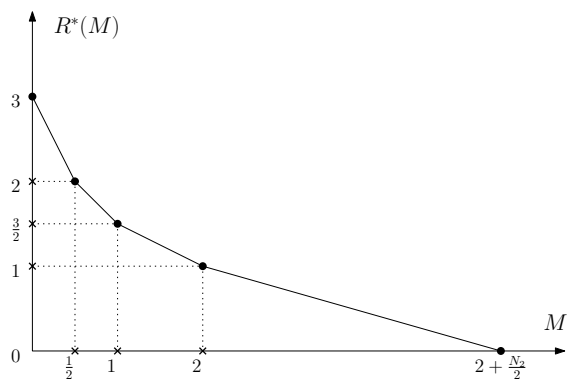

To this end, first establish that all rate-memory pairs on the depicted curve are achievable by answering the following questions.

1. Show that the rate-memory pair $M = 2 + \frac{N_2}{2}$ and $R = 0$ is achievable.
2. Show that the rate-memory pair $M = 2$ and $R = 1$ is achievable.
3. Show that the rate-memory pair $M = 1$ and $R = \frac{3}{2}$ is achievable.
4. Show that the rate-memory pair $M = \frac{1}{2}$ and $R = 2$ is achievable.
5. Show that the rate-memory tradeoff $R^\star(M)$ in the above figure is achievable for all values of $M \in [0, 2 + N_2/2]$.

Now show that no rate-memory pair (R, M) below the curve is achievable by answering the following questions.

6. Assume that User 1 requests message W_1^1, so $d_1 = 1$, User 2 requests message W_2^1, so $d_2 = 2$, and User 3 requests message W_1^2, so $d_3 = 1$. Justify the following inequalities:

$$\begin{aligned}
&RF + 2MF \\
&\overset{(a)}{\geq} H(Z_1, Z_2, X) \\
&\overset{(b)}{=} H(Z_1, Z_2, X | W_1^1, W_2^1, W_1^2) + I(Z_1, Z_2, X; W_1^1, W_2^1, W_1^2) \\
&\overset{(c)}{\geq} I(Z_1, Z_2, X; W_1^1, W_2^1, W_1^2) \\
&\overset{(d)}{=} H(W_1^1, W_2^1, W_1^2) \\
&\overset{(e)}{=} 3F.
\end{aligned}$$

7. Show that this implies that

$$R^\star(M) \geq 3 - 2M. \tag{1}$$

8. Let $X_{1,2,1}$ denote the bits sent in the delivery phase for demands $d_1 = 1, d_2 = 2, d_3 = 1$, and let $X_{2,1,2}$ denote the bits sent in the delivery phase for demands $d_1 = 2, d_2 = 1, d_3 = 2$. Justify the following inequalities:

$$\begin{aligned}
&2(RF + MF) \\
&\overset{(a)}{\geq} H(Z_1, X_{1,2,1}) + H(Z_2, X_{2,1,2}) \\
&\overset{(b)}{=} H(Z_1, X_{1,2,1} | W_1^1) + I(Z_1, X_{1,2,1}; W_1^1) + H(Z_2, X_{2,1,2} | W_1^1) + I(Z_2, X_{2,1,2}; W_1^1) \\
&\overset{(c)}{\geq} H(Z_1, X_{1,2,1}, Z_2, X_{2,1,2} | W_1^1) + I(Z_1, X_{1,2,1}; W_1^1) + I(Z_2, X_{2,1,2}; W_1^1) \\
&\overset{(d)}{=} H(Z_1, X_{1,2,1}, Z_2, X_{2,1,2} | W_1^1) + H(W_1^1) + H(W_1^1) \\
&\overset{(e)}{=} H(Z_1, X_{1,2,1}, Z_2, X_{2,1,2} | W_1^1) + 2 \\
&\overset{(f)}{=} H(Z_1, X_{1,2,1}, Z_2, X_{2,1,2} | W_1^1, W_2^1, W_1^2, W_2^2) + I(Z_1, X_{1,2,1}, Z_2, X_{2,1,2}; W_2^1, W_1^2, W_2^2 | W_1^1) + 2 \\
&\overset{(g)}{\geq} I(Z_1, X_{1,2,1}, Z_2, X_{2,1,2}; W_2^1, W_1^2, W_2^2 | W_1^1) + 2 \\
&\overset{(h)}{=} H(W_2^1, W_1^2, W_2^2 | W_1^1) + 2 \\
&\overset{(i)}{=} 5F.
\end{aligned}$$

9. Show that this implies that

$$R^\star(M) \geq \frac{5}{2} - M. \tag{2}$$

10. In similar ways, one can also show that

$$R^\star(M) \geq 2 - \frac{1}{2}M \qquad \text{and} \qquad R^\star(M) \geq 1 - \frac{M-2}{N_2/2}M. \tag{3}$$

Show that no rate-memory pair (R, M) below the curve indicated in the figure at the bottom of page 1 is achievable.