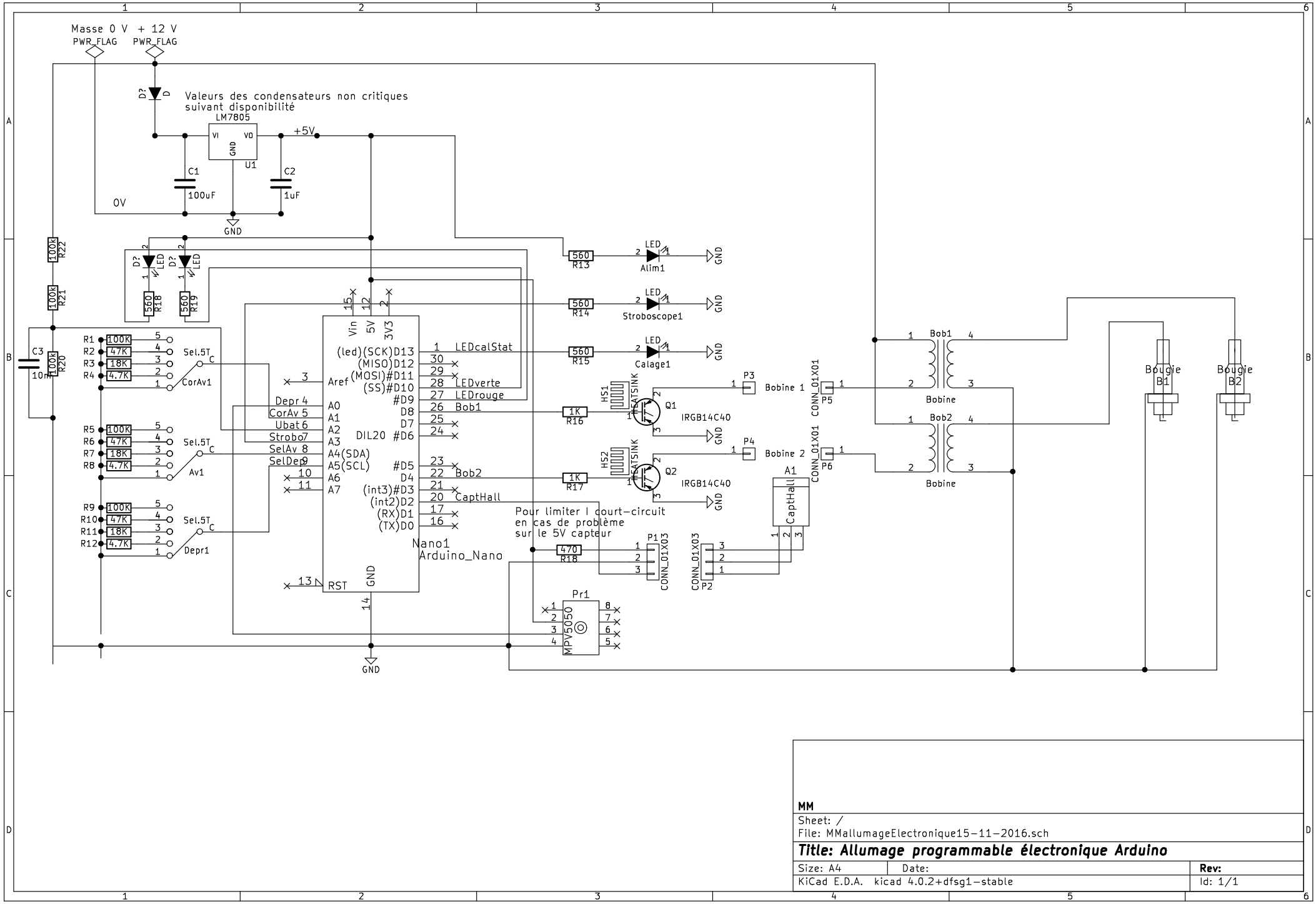

MM

Sheet: /

File: MMallumageElectronique15-11-2016.sch

Title: Allumage programmable électronique Arduino

Size: A4	Date:	**Rev:**
KiCad E.D.A. kicad 4.0.2+dfsg1-stable		Id: 1/1