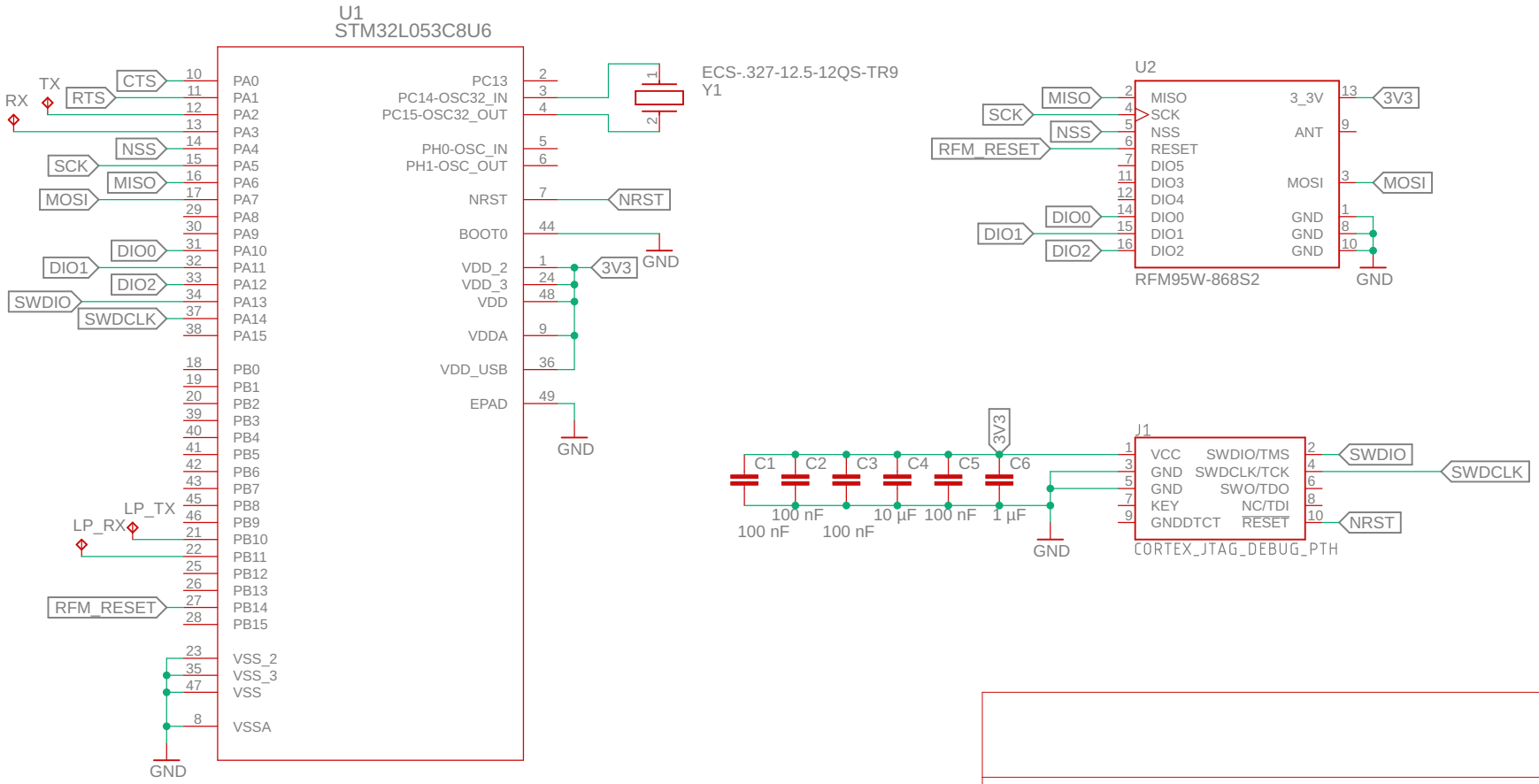

TITLE: LoRa_v2

Document Number:

REV:

Date: 6/05/2023 17:08

Sheet: 1/1