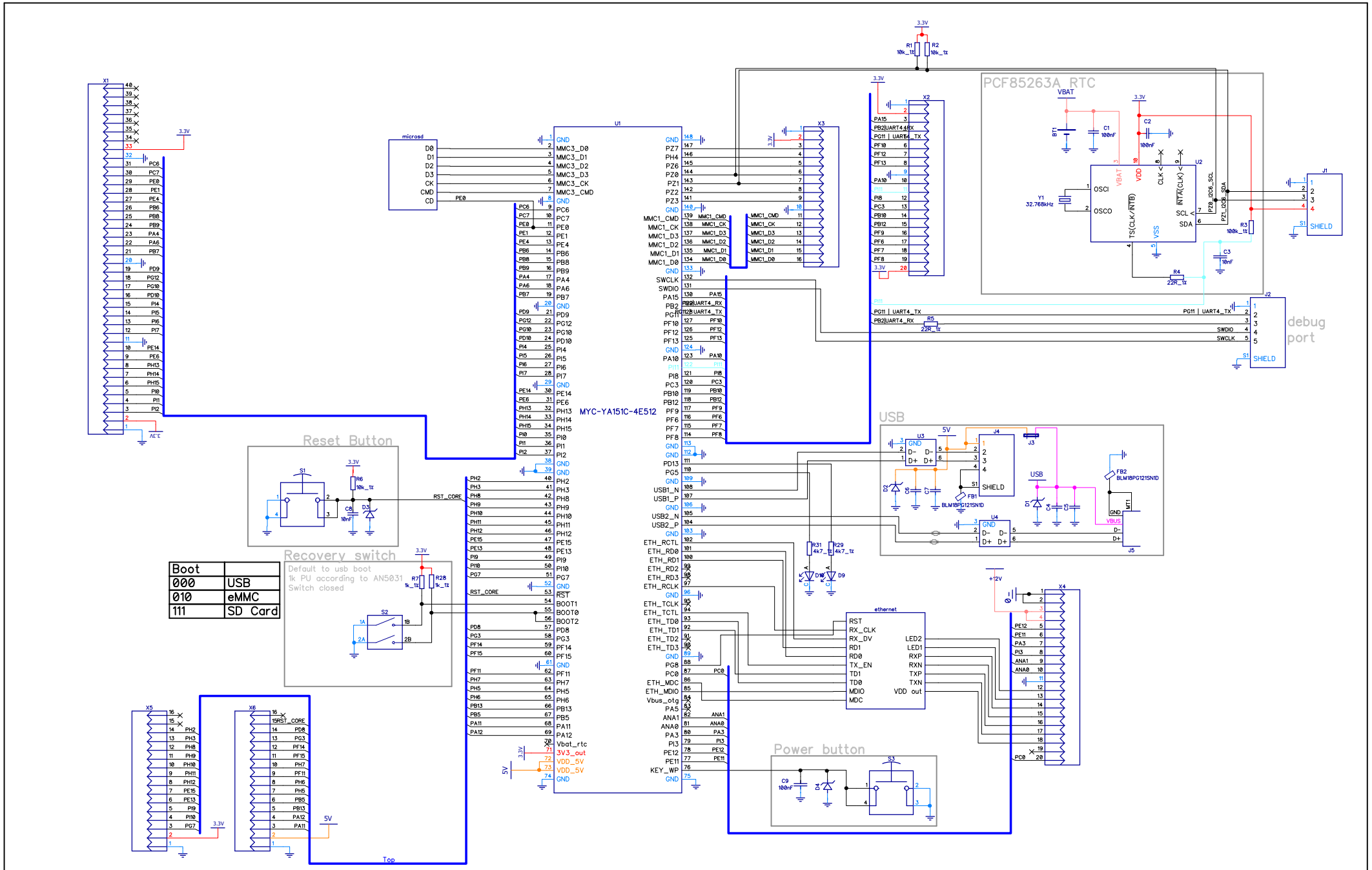

Boot	
000	USB
010	eMMC
111	SD Card

Title	TIOS STM32MP151 - SoM	
Size	Number	Rev 0
Date		Drawn by MTJ
Filename Core_v2_mid.dch		Sheet 1/4

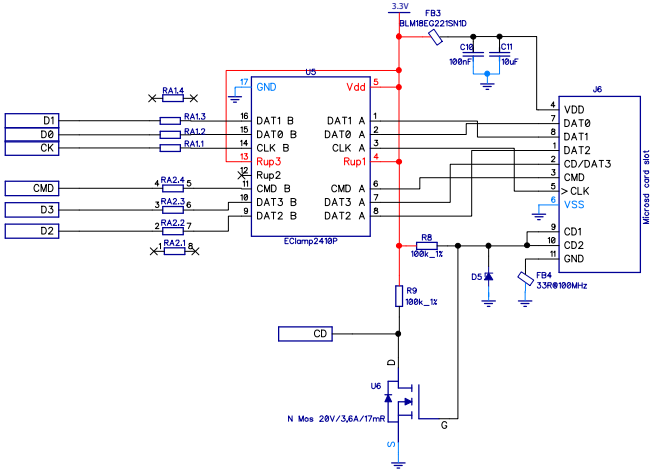

Title TIOS STM32MP151 - MicroSD		
Size	Number	Rev 0
Date		Drawn by MTJ
Filename Core_v2_mid.dch		Sheet 2/4

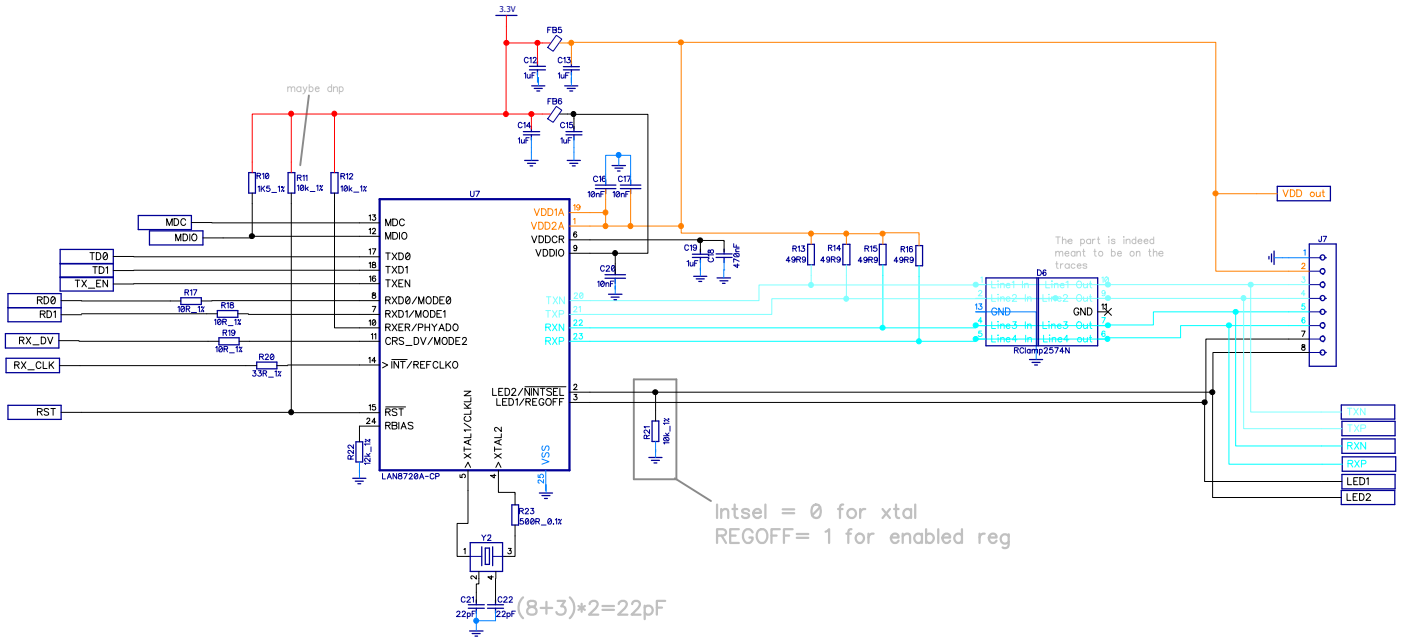

Title TIOS STM32MP151 - LAN8710A		
Size	Number	Rev 0
Date		Drawn by MTJ
Filename Core_v2_mid.dch		Sheet 3/4

Power input selection and filtering

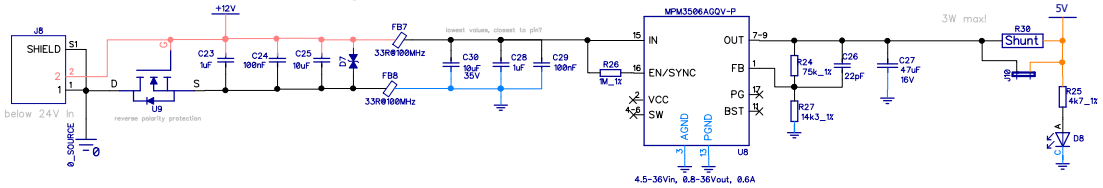

Title		
TIOS STM32MP151 - Power		
Size	Number	Rev 0
Date		Drawn by MTJ
Filename Core_v2_mid.dch		Sheet 4/4