ESDA7P60-1U1M

High power transient voltage suppressor

Datasheet - production data

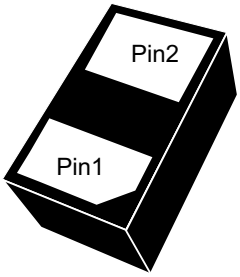

1610 package

Features

- Low clamping voltage
- Typical peak pulse power:
  - 700 W (8/20µs)
- Stand off voltage 5 V
- Unidirectional diode
- Low leakage current:
  - 0.2 µA at 25 °C
- RoHS compliant

Complies with the following standards:

- IEC 61000-4-2 level 4
  - ±30 kV (air discharge)
  - ±30 kV (contact discharge)

Applications

Where transient overvoltage protection in ESD sensitive equipment is required, such as:

- Portable multimedia, tablets, mobile phone, smart phone
- USB V_{BUS} protection
- Power supply protection
- Battery protection

Description

The ESDA7P60-1U1M is a unidirectional single line TVS diode designed to protect the power line against EOS and ESD transients.

The device is ideal for applications where high power TVS and board space saving are required.

Figure 1. Pin configuration

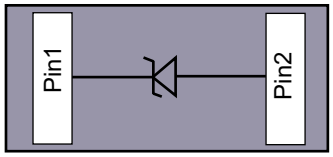

This is information on a product in full production. www.st.com

1 Characteristics

Table 1. Absolute maximum ratings (T_{amb} = 25 °C)

Symbol	Parameter	Value	Unit
V_{PP}	Peak pulse voltage: IEC 61000-4-2 contact discharge EC 61000-4-2 air discharge	 > 30 > 30	kV
P_{PP}	Peak pulse current (8/20 µs)	700	W
I_{PP}	Peak pulse current (8/20 µs)	60	A
T_{stg}	Storage temperature range	- 55 to +150	°C
T_{op}	Operating junction temperature range	-55 to +150	°C

Figure 2. Electrical characteristics (definitions)

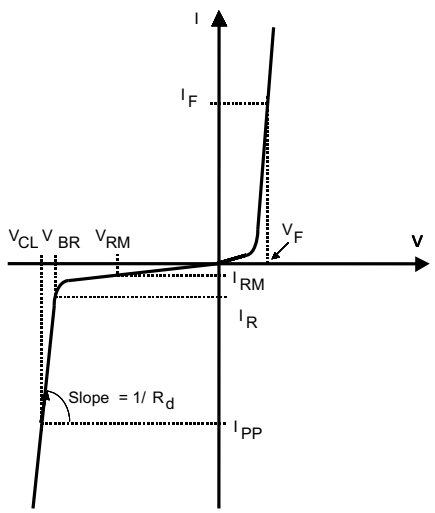

Table 2. Electrical characteristics (values, T_{amb} = 25 °C)

Symbol	Test conditions	Min.	Typ.	Max.	Unit
V_{BR}	I_R = 1 mA	6.4	6.8	7.2	V
I_{RM}	V_{RM} = 5 V			200	nA
V_{CL}	I_{PP} = 60 A 8/20 µs		10.2	11.6	V
R_d	8/20 µs		0.06		Ω

Figure 3. Peak pulse power dissipation versus initial junction temperature (typical values)

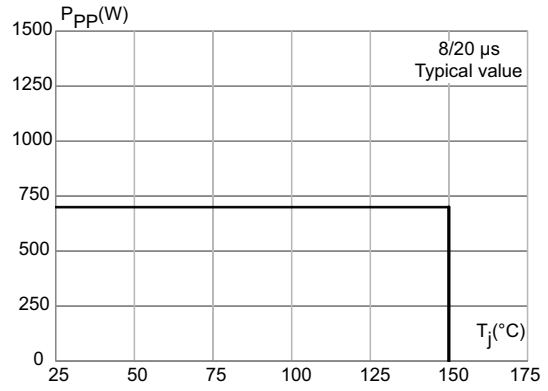

Figure 4. Peak pulse power versus exponential pulse duration (maximum values)

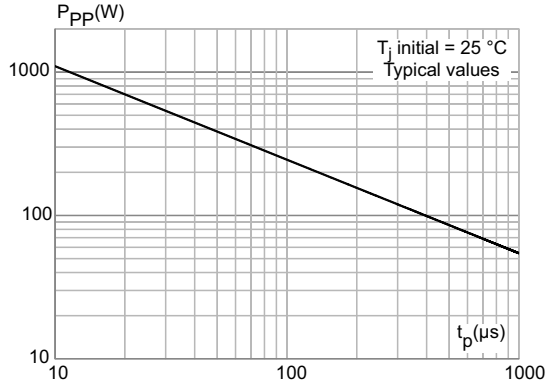

Figure 5. Peak pulse current versus clamping voltage (maximum values)

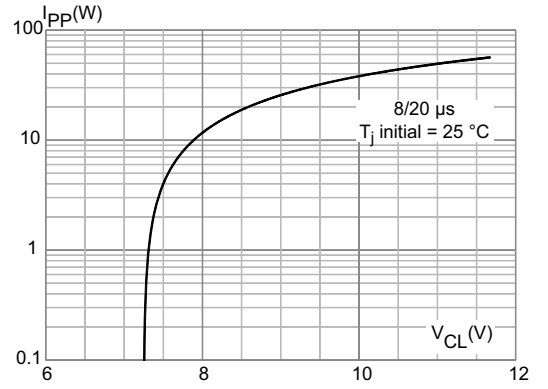

Figure 6. Leakage current versus junction temperature (typical values)

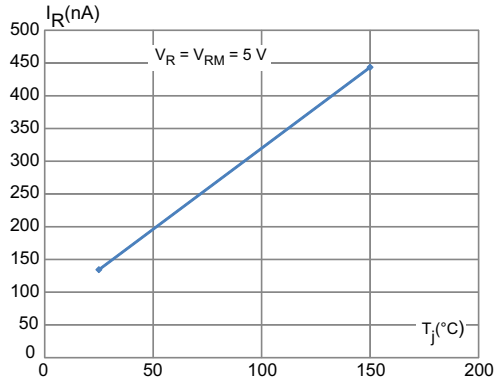

Figure 7. ESD response to IEC 61000-4-2 (+8 kV contact discharge)

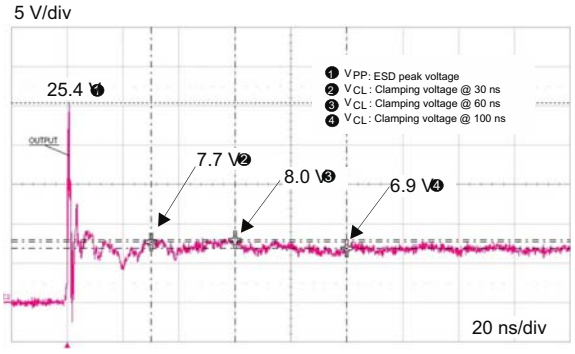

Figure 8. ESD response to IEC 61000-4-2 (-8 kV contact discharge)

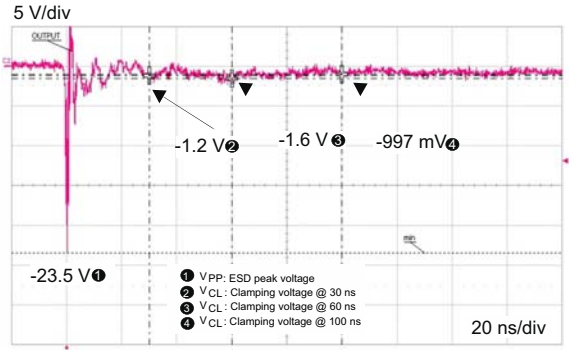

2 Package information

- Epoxy meets UL94, V0
- Dot indicates pin 1

In order to meet environmental requirements, ST offers these devices in different grades of ECOPACK® packages, depending on their level of environmental compliance. ECOPACK® specifications, grade definitions and product status are available at: *www.st.com*. ECOPACK® is an ST trademark.

2.1 1610 package information

Figure 9. 1610 package outline

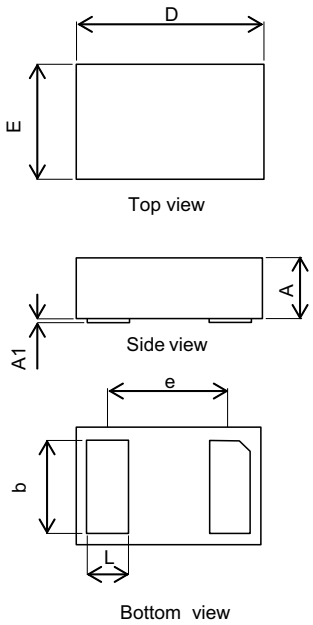

Table 3. 1610 package mechanical data

Ref.	Dimensions					
	Millimeters			Inches		
	Min.	Typ.	Max.	Min.	Typ.	Max.
A	0.51	0.55	0.60	0.020	0.021	0.023
A1	0.00	0.02	0.05			0.002
b	0.75	0.80	0.85	0.029	0.031	0.033
D	1.50	1.60	1.70	0.059	0.063	0.067
E	0.90	1.00	1.10	0.035	0.039	0.043
e		1.05			0.041	
L	0.30	0.35	0.40	0.011	0.013	0.016

Figure 10. Footprint, dimensions in mm

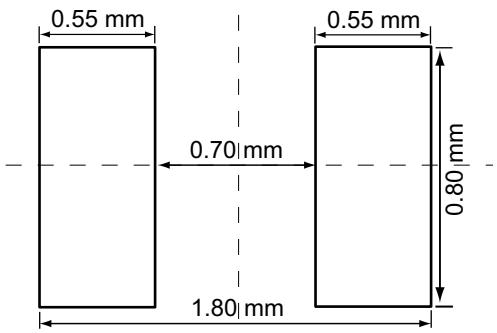

Figure 11. Alternative footprint, dimensions in mm

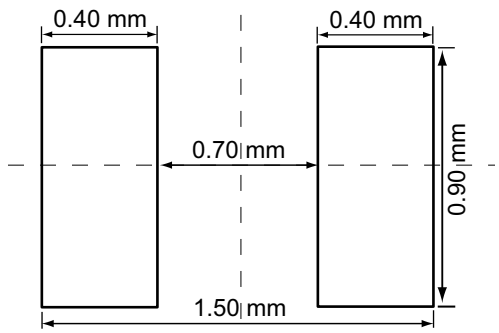

Figure 12. Marking

Note: Product marking may be rotated by multiples of 90° for assembly plant differentiation. In no case should this product marking be used to orient the component for its placement on a PCB. Only pin 1 mark is to be used for this purpose.

2.2 Packing information

Figure 13. Tape and reel outline

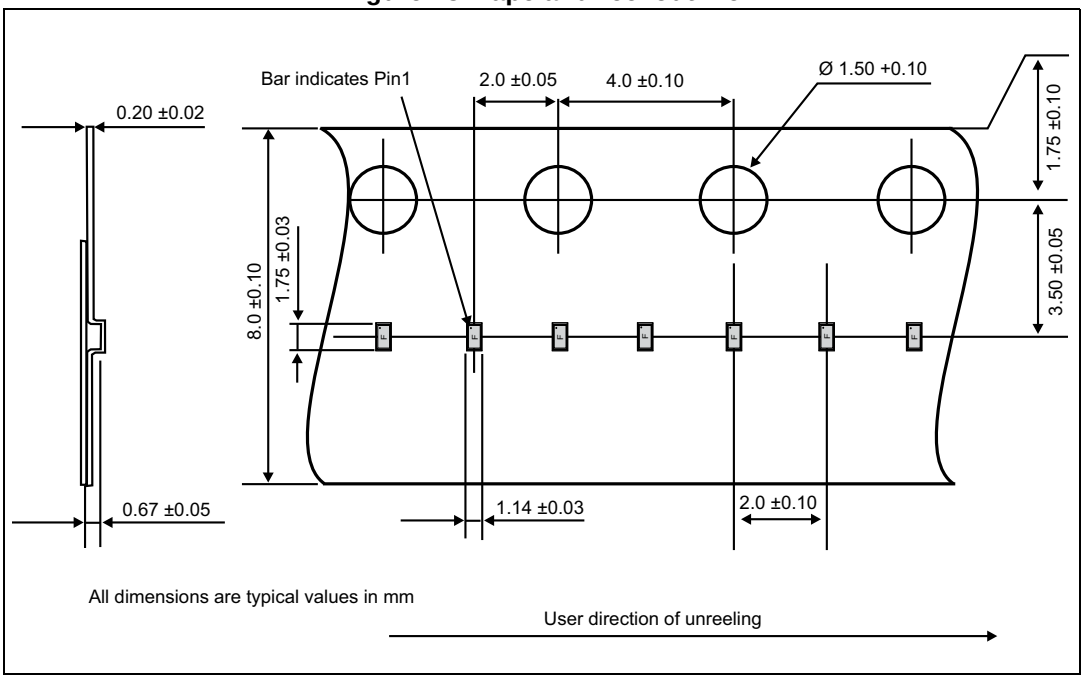

3 Recommendation on PCB assembly

3.1 Stencil opening design

1. General recommendation on stencil opening design
   a) Stencil opening dimensions: L (Length), W (Width), T (Thickness).

Figure 14. Stencil opening dimensions

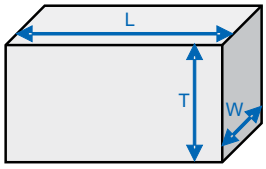

   b) General design rule

   Stencil thickness (T) = 75 ~ 125 µm

$$\text{Aspect Ratio} = \frac{W}{T} \geq 1.5$$

$$\text{Aspect Area} = \frac{L \times W}{2T(L + W)} \geq 0.66$$

2. Reference design
   a) Stencil opening thickness: 100 µm
   b) Stencil opening for leads: Opening to footprint ratio is 90%.

Figure 15. Recommended stencil window position

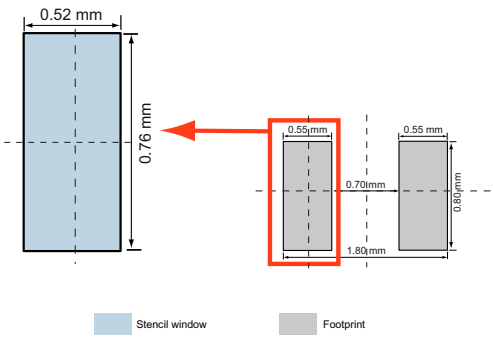

Figure 16. Alternative stencil window position

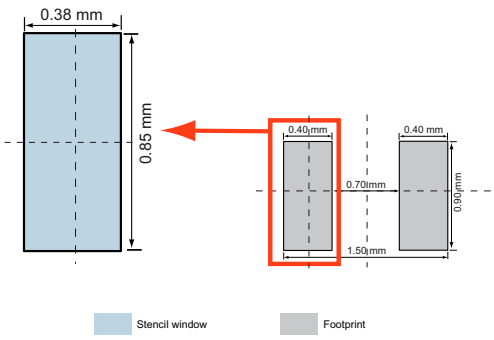

3.2 Solder paste

1. Use halide-free flux, qualification ROL0 according to ANSI/J-STD-004.
2. “No clean” solder paste recommended.
3. Offers a high tack force to resist component displacement during PCB movement.
4. Use solder paste with fine particles: powder particle size 20-45 µm.

3.3 Placement

1. Manual positioning is not recommended.
2. It is recommended to use the lead recognition capabilities of the placement system, not the outline centering.
3. Standard tolerance of ± 0.05 mm is recommended.
4. 3.5 N placement force is recommended. Too much placement force can lead to squeezed out solder paste and cause solder joints to short. Too low placement force can lead to insufficient contact between package and solder paste that could cause open solder joints or badly centered packages.
5. To improve the package placement accuracy, a bottom side optical control should be performed with a high resolution tool.
6. For assembly, a perfect supporting of the PCB (all the more on flexible PCB) is recommended during solder paste printing, pick and place and reflow soldering by using optimized tools.

3.4 PCB design preference

1. To control the solder paste amount, the closed via is recommended instead of open vias.
2. The position of tracks and open vias in the solder area should be well balanced. The symmetrical layout is recommended, in case any tilt phenomena caused by asymmetrical solder paste amount due to the solder flow away.

3.5 Reflow profile

Figure 17. ST ECOPACK® recommended soldering reflow profile for PCB mounting

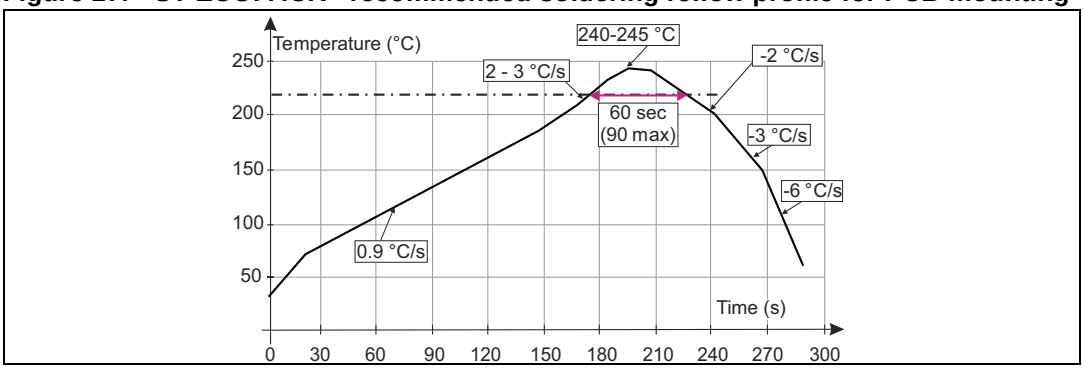

Note: Minimize air convection currents in the reflow oven to avoid component movement.

4 Ordering information

Figure 18. Ordering information scheme

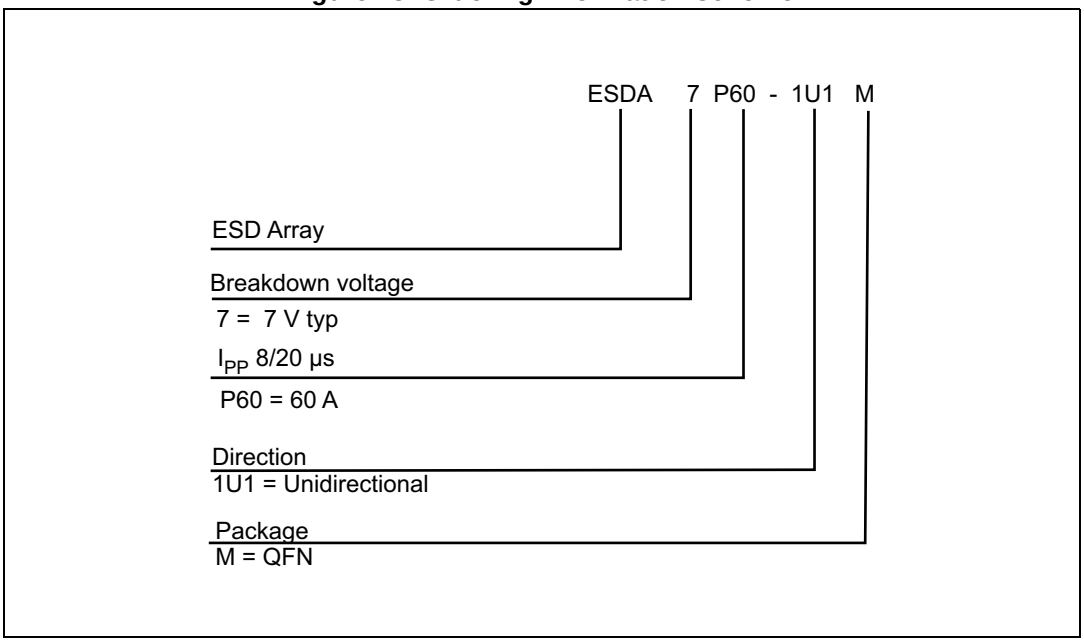

Table 4. Ordering information

Order code	Marking	Weight	Base qty	Delivery mode
ESDA7P60	F(1)	2.4 mg	8000	Tape and reel

1. The marking can be rotated by multiples of 90° to differentiate assembly location

5 Revision history

Table 5. Document revision history

Date	Revision	Changes
14-Nov-2014	1	Initial release.
02-Jul-2015	2	Updated Figure 4.
14-Oct-2015	2	Updated *Description* and reformatted to current standard.

IMPORTANT NOTICE – PLEASE READ CAREFULLY

STMicroelectronics NV and its subsidiaries (“ST”) reserve the right to make changes, corrections, enhancements, modifications, and improvements to ST products and/or to this document at any time without notice. Purchasers should obtain the latest relevant information on ST products before placing orders. ST products are sold pursuant to ST’s terms and conditions of sale in place at the time of order acknowledgement.

Purchasers are solely responsible for the choice, selection, and use of ST products and ST assumes no liability for application assistance or the design of Purchasers’ products.

No license, express or implied, to any intellectual property right is granted by ST herein.

Resale of ST products with provisions different from the information set forth herein shall void any warranty granted by ST for such product.

ST and the ST logo are trademarks of ST. All other product or service names are the property of their respective owners.

Information in this document supersedes and replaces information previously supplied in any prior versions of this document.

© 2015 STMicroelectronics – All rights reserved

Mouser Electronics

Authorized Distributor

Click to View Pricing, Inventory, Delivery & Lifecycle Information:

STMicroelectronics:

ESDA7P60-1U1M