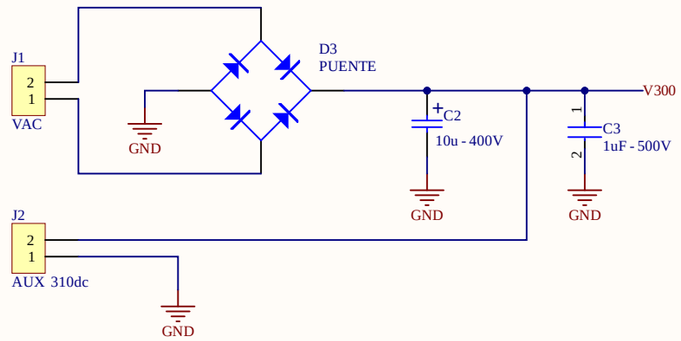

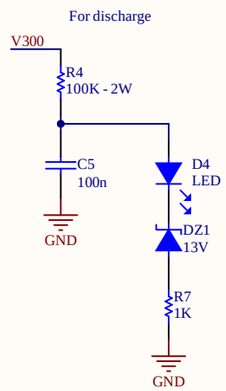

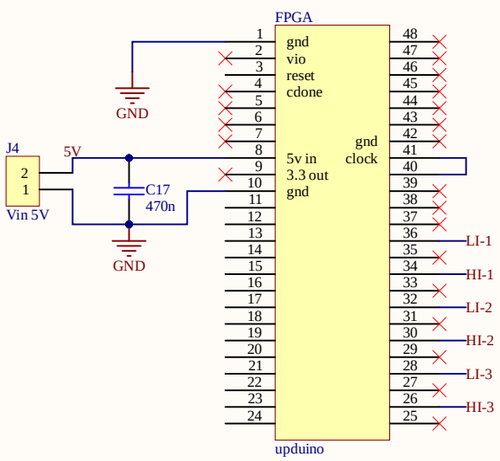

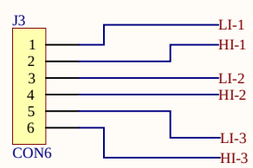

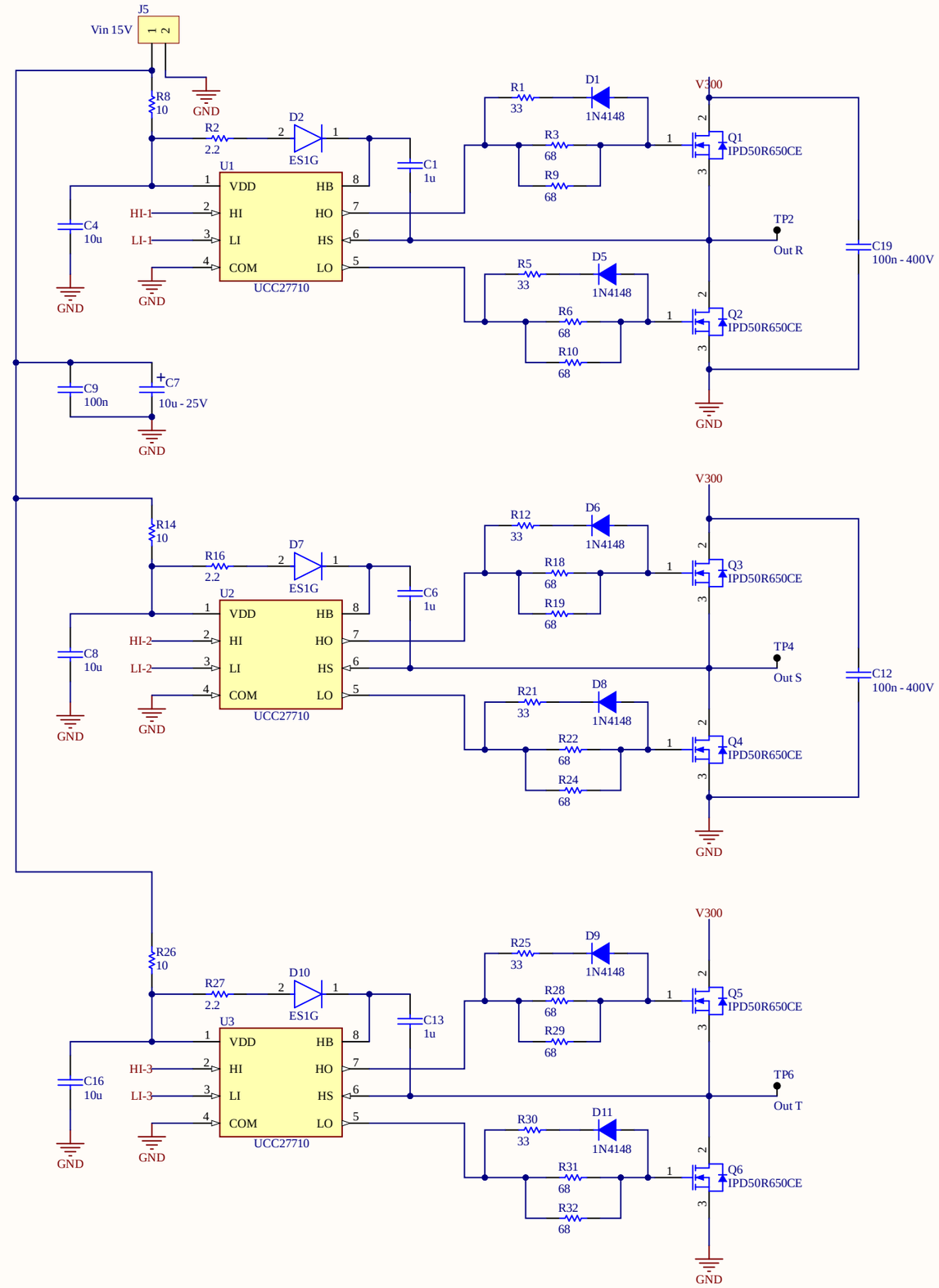

Title		
Voltage Inverter		
Size: A3	Number: Grupo 1 - Electrónica IV	Revision
Date: 7/01/2024	Sheet of	
File: C:\Users\..\InverterSchematic.SchDoc	Drawn By:	