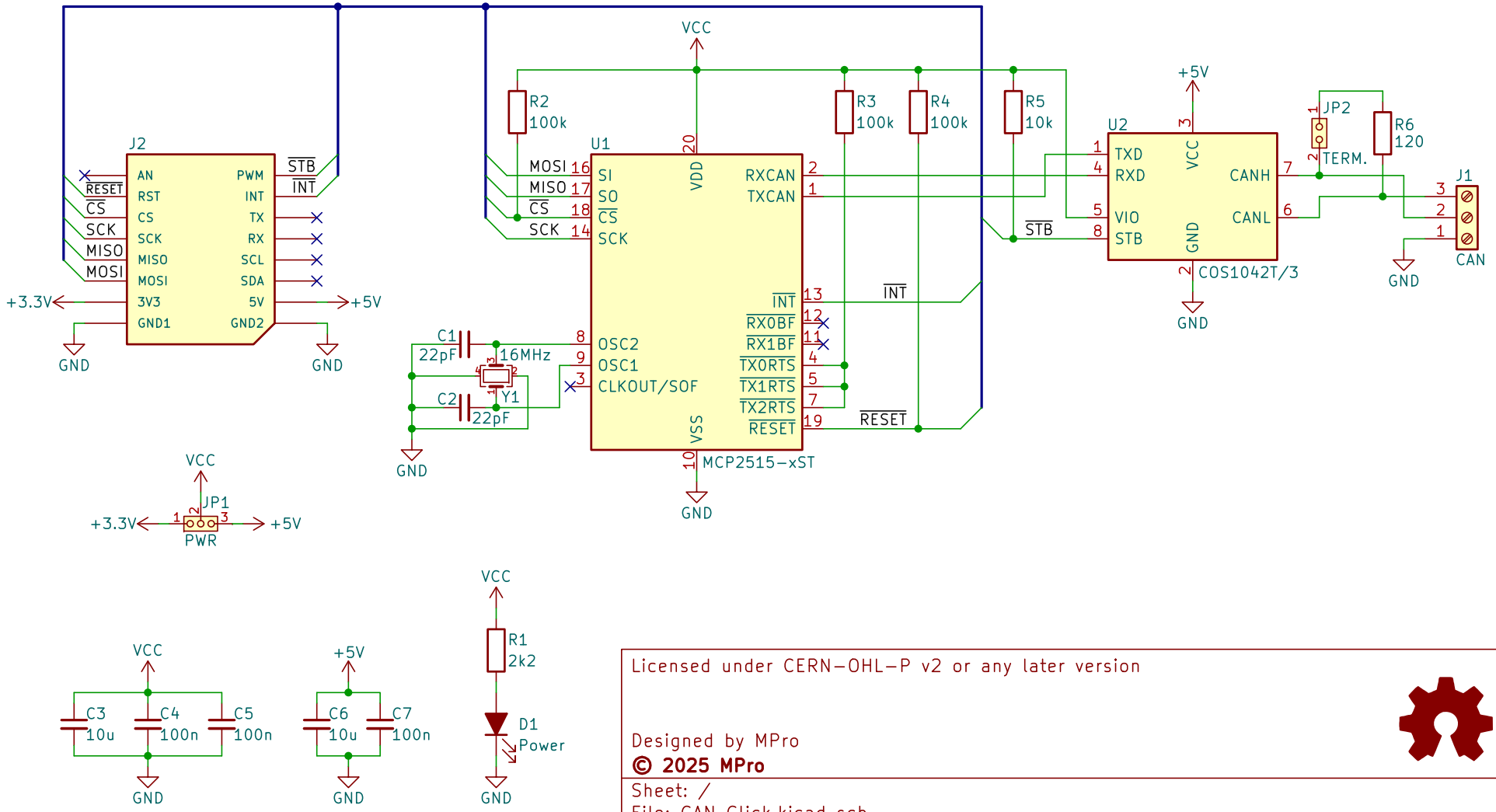

Licensed under CERN-OHL-P v2 or any later version

Designed by MPro

© 2025 MPro

Sheet: /

File: CAN_Click.kicad_sch

Title: CAN Click

Size: A5	Date: 2025-04-19	**Rev: 1.0**
KiCad E.D.A. 9.0.1		Id: 1/1