Electric motor cooling simulation : direct vs indirect

International CAE Conference

November 19th, 2021

Jonathan Raisin

Khalid Ait-Hammou

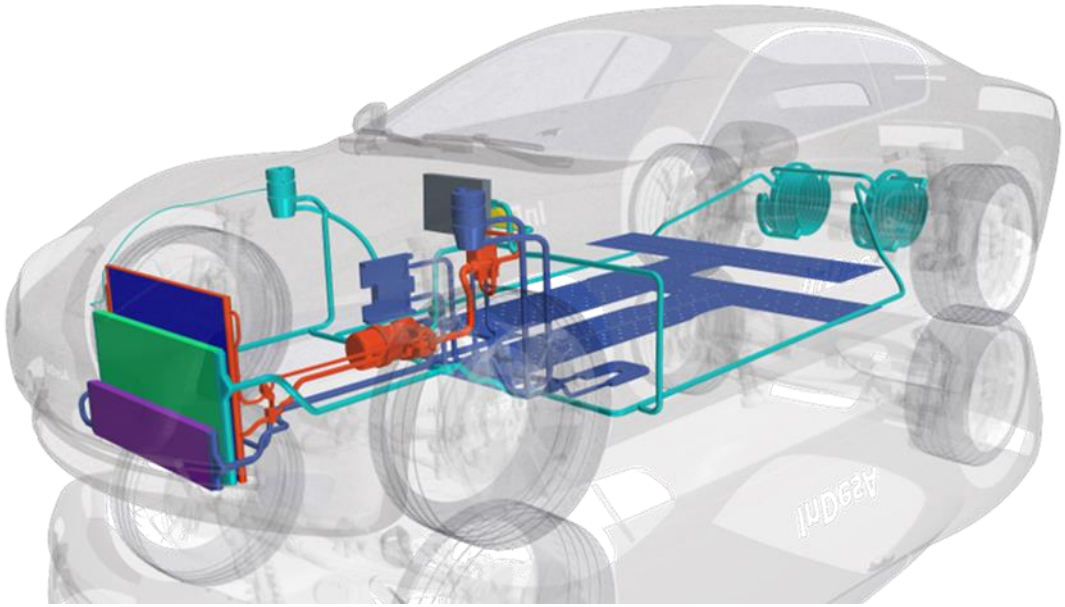

Outline

- TotalEnergies' approach to the electrification of passengers cars

- Simulation of the thermal management for emotors:
  - Protocol
  - Thermal comparison: direct cooling vs indirect cooling
  - Optimization of cooling fluids

- Conclusion

Electrification & fluid requirements

	12V Micro-Hybrid (Stop & Start)	48 V Mild Hybrid	Full Hybrid	Plug-in Hybrid	Full Electric
Electrical power	< 5 kW	5 – 13 kW	20 – 40 kW	50 – 90 kW	> 50 kW
	3 – 4 %	13 – 21 %	20 – 30 %	50 – 75 %	100 %

The variety of technological choices made by OEMs regarding electrification of vehicle increase the need for fluid manufacturers to adapt their formulation strategy.

From application to dedicated fluid families

TotalEnergies

THERMAL MANAGEMENT FLUIDS

E-TRANSMISSION FLUIDS

Technology

Battery pack

Power electronic

Electric motor

Single/Multi Speed Reducer

DHT (Dedicated Hybrid Transmission)

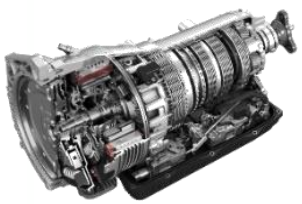

Hybrid gearbox (e-AT, e-DCT …)

Fluid families

EV-MOTOR

EV-BATTERY

EV-AT

EV-DCT

EV-DHT

EV-DRIVE MP

EV-DRIVE R

Thermal management for emotors: direct vs indirect

- Most electric and hybrid powertrain are currently using indirect cooling : air, water jacket …
- **Power density increase** will significantly impact heat generation leading to thermal management is becoming **one of the biggest challenge** for OEMs.
- Direct oil cooling can allow to **improve drastically thermal management**.
- **Transmission oil is used for e-motor direct cooling** in more and more vehicles (wet e-motor) and in the future for power electronic

What are the expected gains in typical applications?

Can simulation accelerate the design of emotor cooling architecture both from the hardware and fluid perspectives?

Simulation approach:

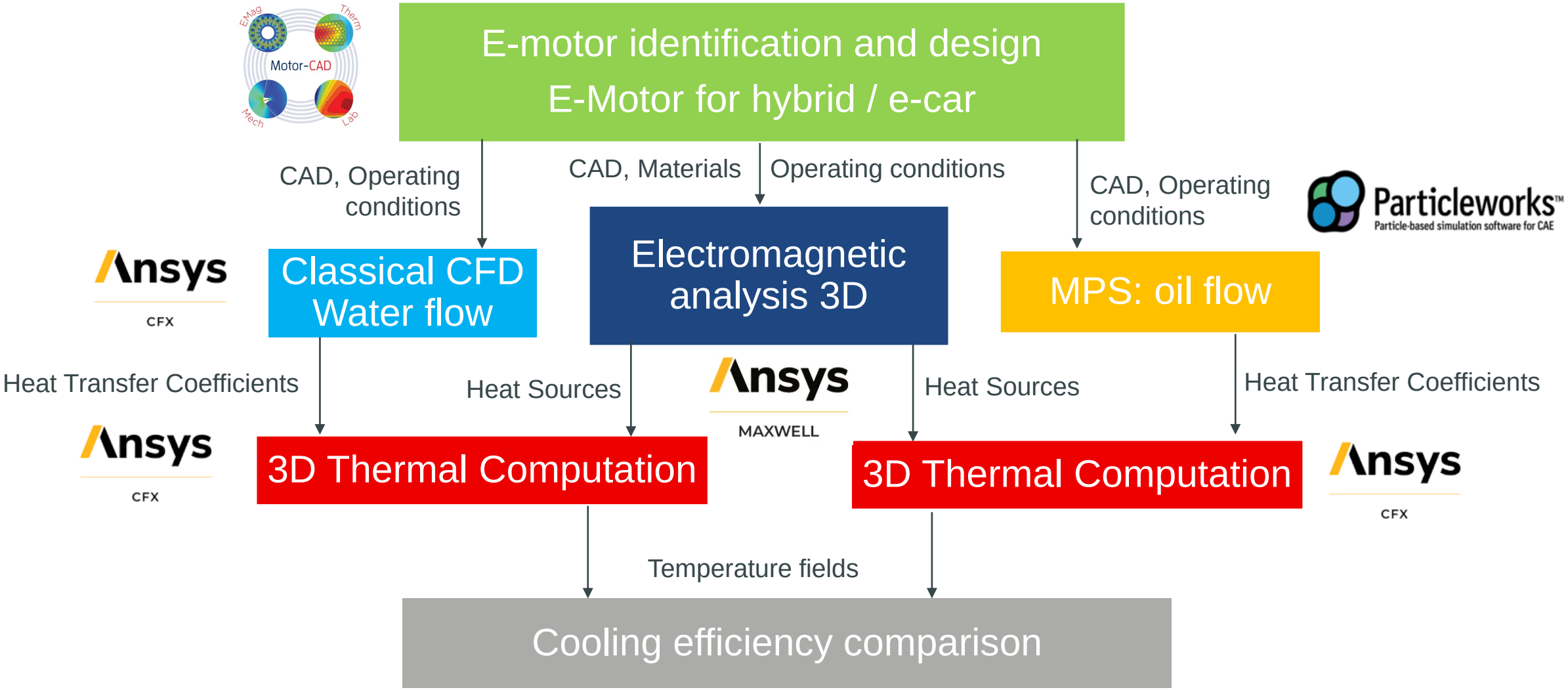

Electric motor definition

- **Type:**
  - Synchronous three-phase Internal Permanent Magnet motor (IPM)
  - Hairpin coil windings with 6 winding layer

- **Nature of losses considered:**
  - Windings: AC losses
  - Magnets: Hysteresis and eddy currents losses
  - Rotor/Stator: Hysteresis and eddy currents losses

- **Cooling strategies considered:**
  - “Serpentine-like” water jacket (**water-indirect**)
  - Jets from hollow shaft (**oil-direct**)

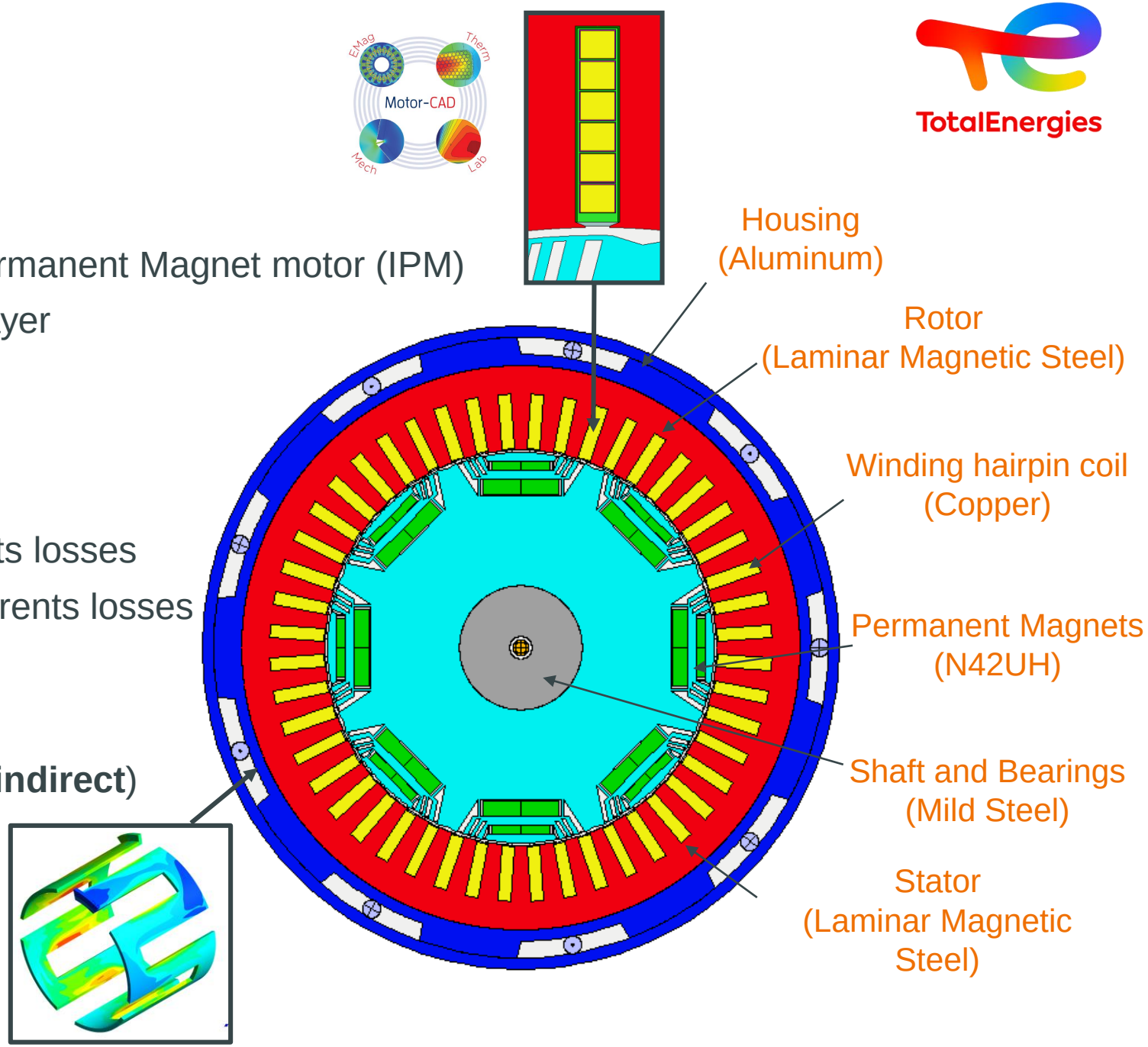

Operating conditions and electric motor performances

- Efficiency map:

Nominal working point
Speed: 6000 rpm
Torque: 85.9 Nm
Efficiency: 97.6%

Max Operative Point
Speed: 10000 rpm
Torque: 179 Nm
Efficiency: 92.2%

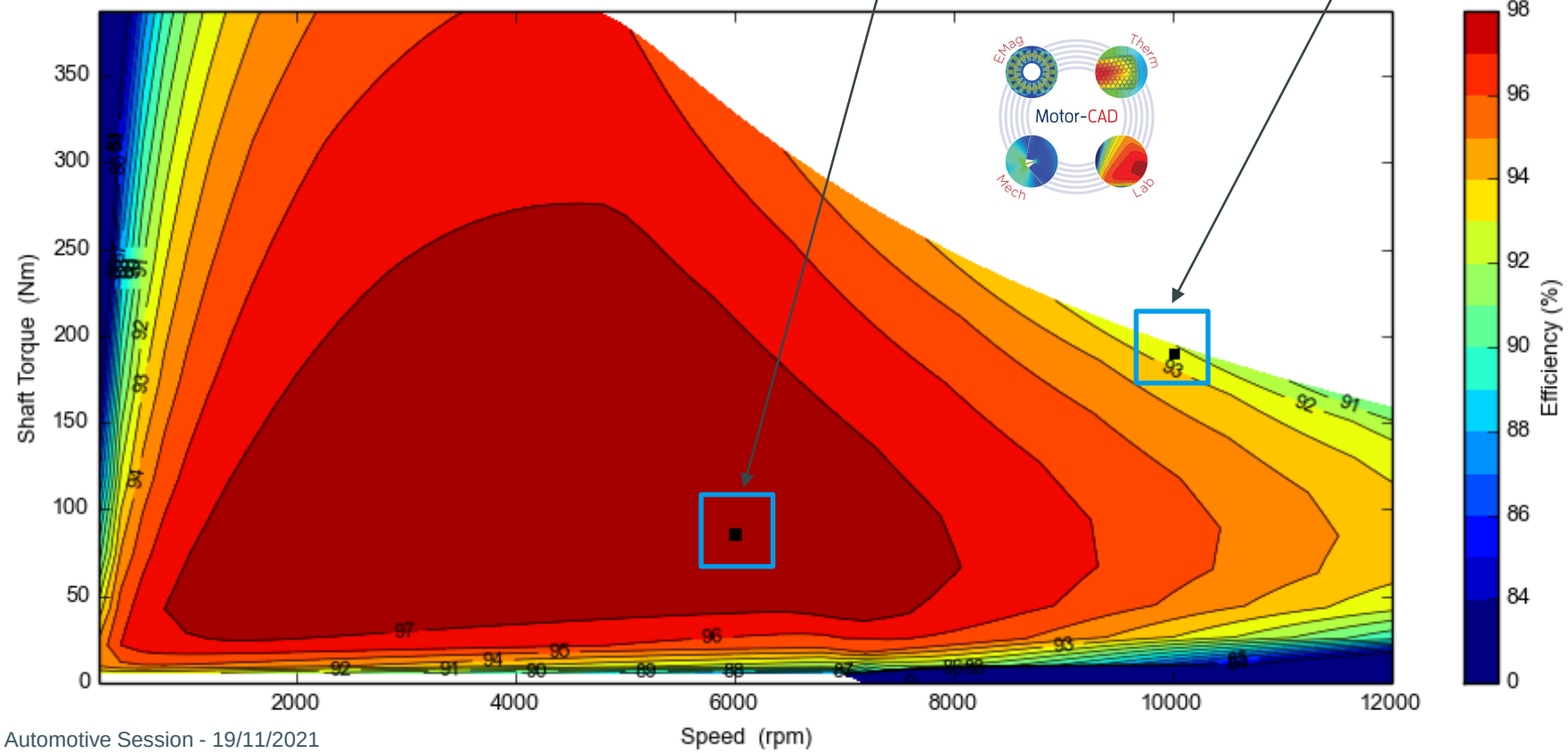

Power losses / Heat sources:

From a 2D approximation…

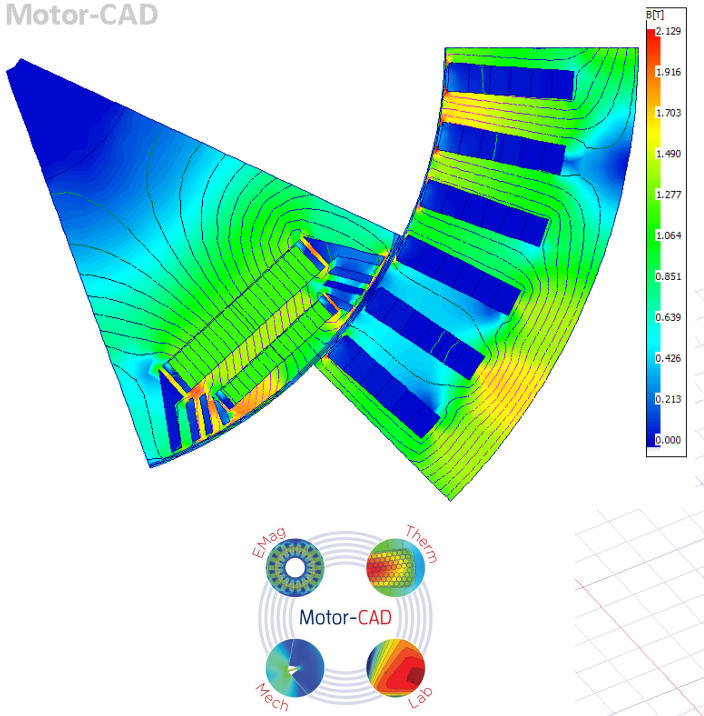

…to a refined 3D solution

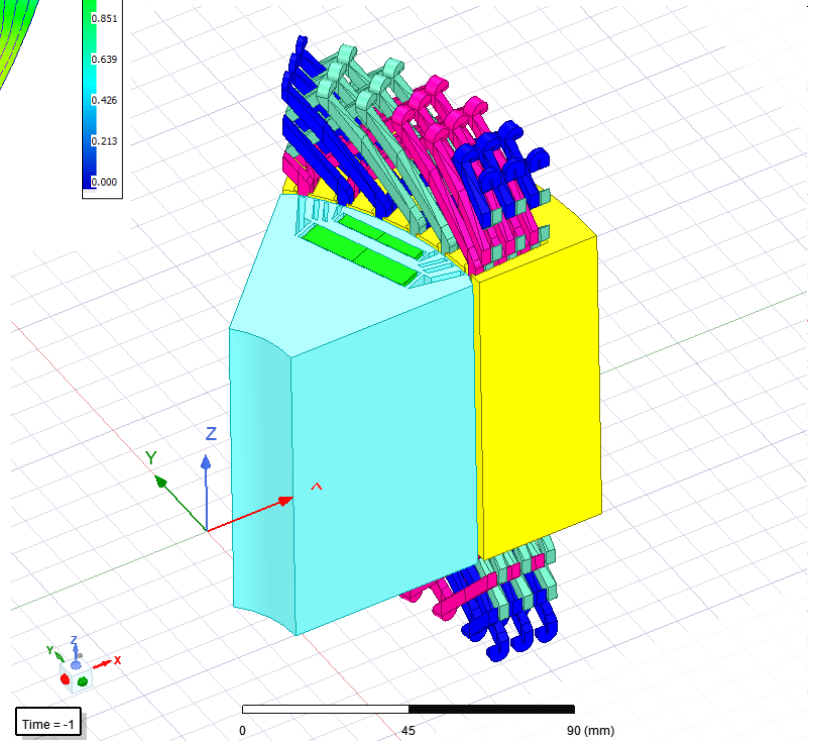

Total Losses	6k rpm	10k rpm
Average Torque	81.03 [Nm]	172.3 [Nm]
Winding Losses	**787.7 [W]**	**13950 [W]**
CoreLoss Stator	483.38 [W]	1930.5 [W]
CoreLoss Rotor	166.81[W]	901.2 [W]
Magnet Losses	6.16 [W]	51.9 [W]

Oil flow computation and resulting heat transfer

Oil flow rate in shaft

Windage effects

Oil flow and accumulation

Heat Transfer Coefficients

Particleworks™
Particle-based simulation software for CAE

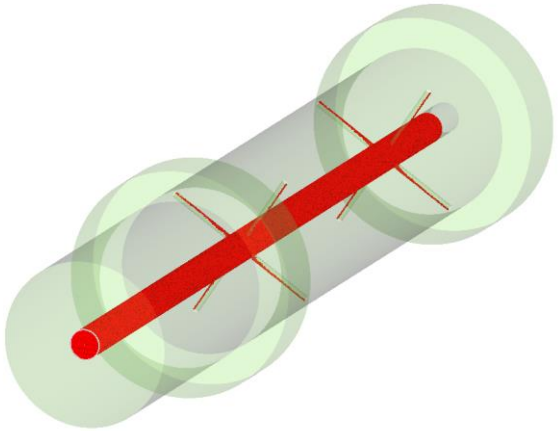

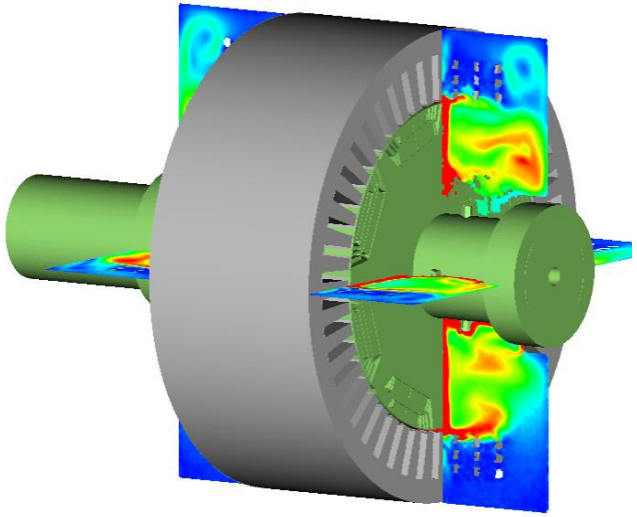

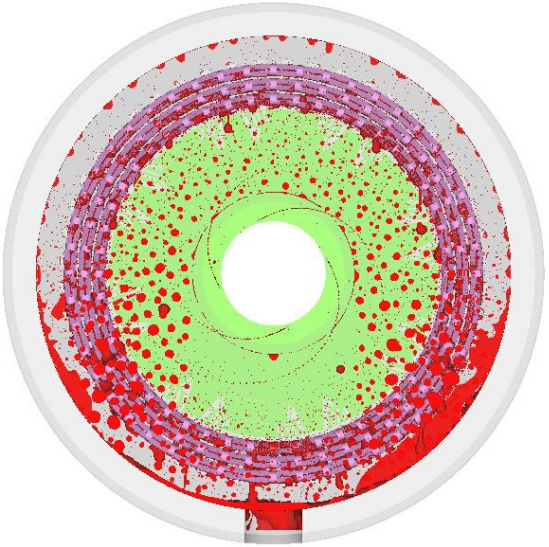

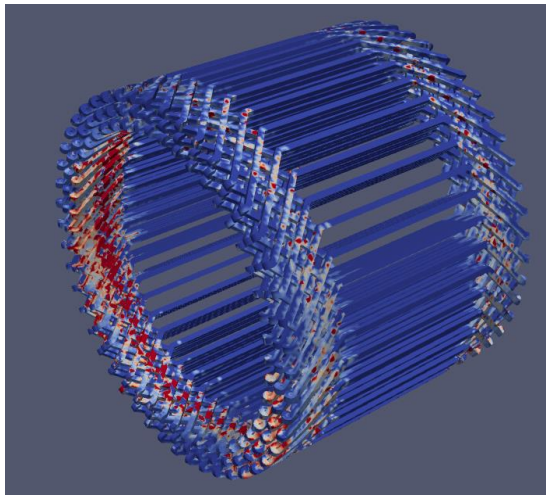

- ☑ **Flow rate split**
- ☑ **Jet initial velocity**

- ☑ **Air velocity profile**

- ☑ **Air and oil distribution**
- ☑ **Air and oil velocity**

- ☑ **Surface HTCs for all components**

OIL Flow simulation results

Particleworks™
Particle-based simulation software for CAE

6 000 rpm

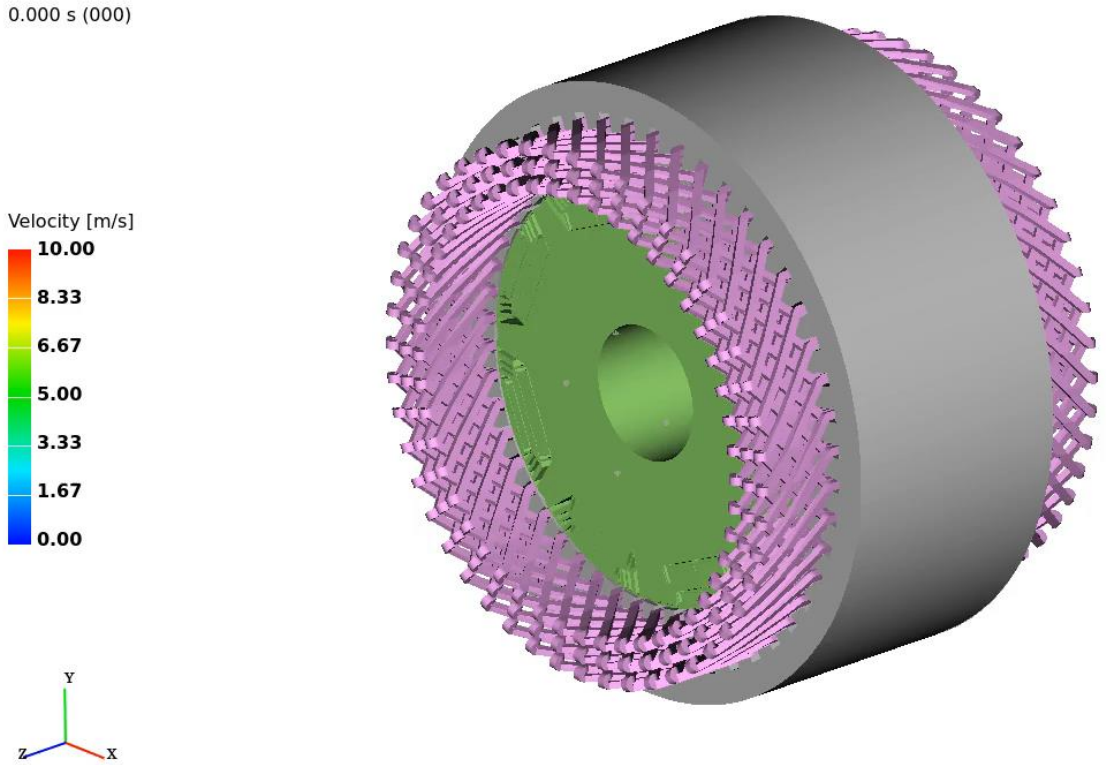

3l/min oil flow

10 000 rpm

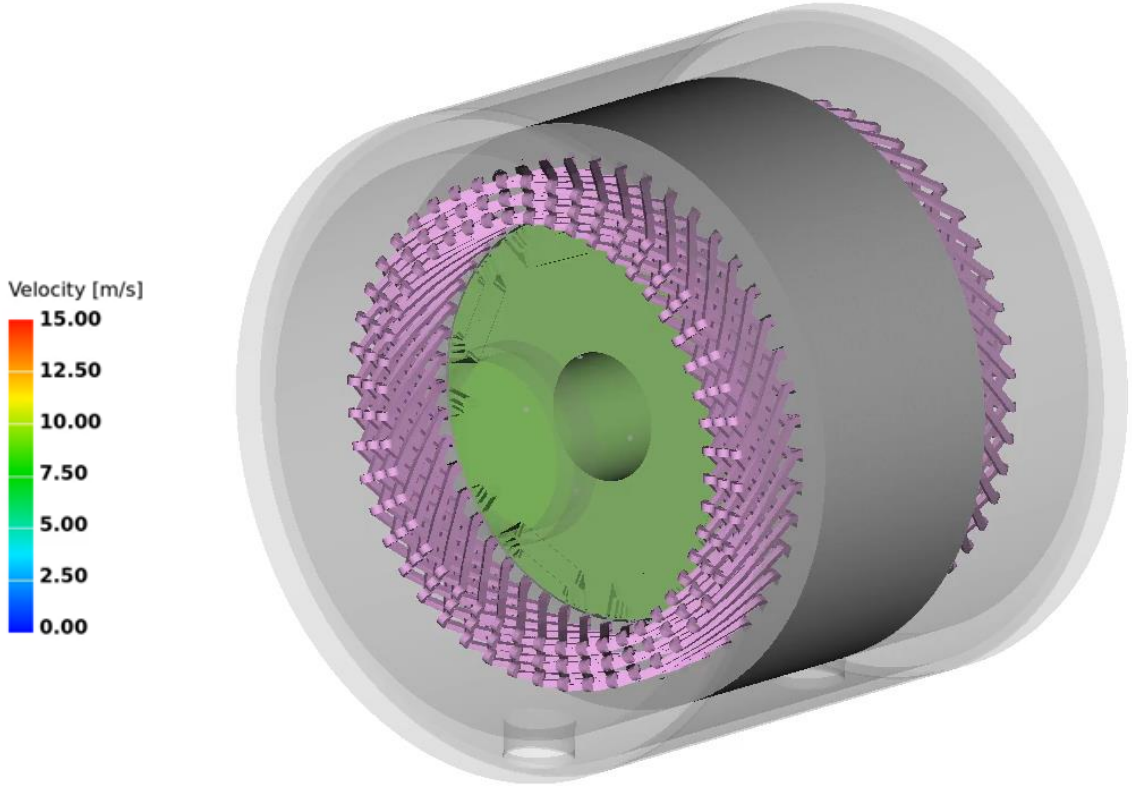

3l/min oil flow

Direct vs indirect cooling - Temperature results

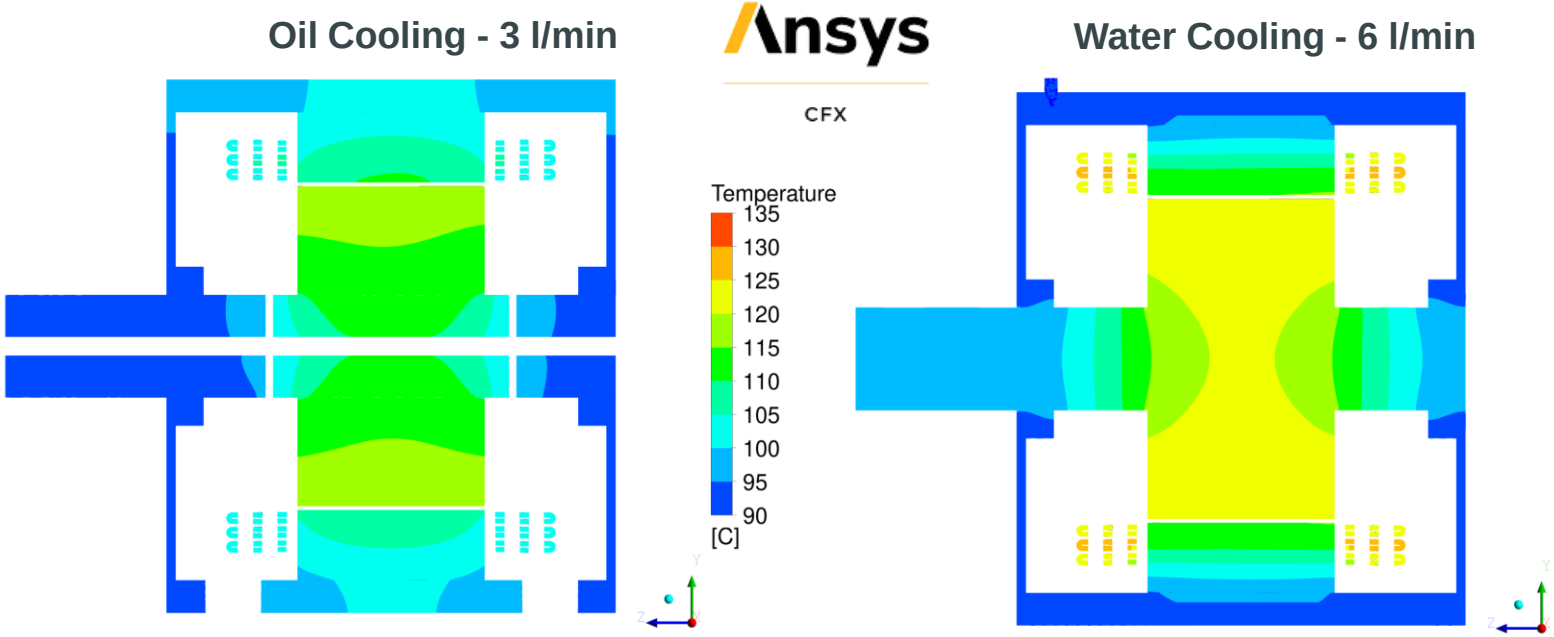

	Oil Cooling System 6000 rpm, 3 l/min		Water Cooling System 6000 rpm, 6 l/min	
	Ave. Temp. [°C]	Max. Temp. [°C]	Ave. Temp. [°C]	Max. Temp. [°C]
Housing	97.6	102	-4.3	-4.1
Stator	103.3	110.9	0.7	5.6
Resin	105.6	110.6	8.7	15.6
Windings	104.4	110.2	17.6	18.4
Rotor	115.7	125	7	5.8
Magnets	120.1	124.8	6.6	6
Shaft	98.7	113.6	6.5	7.6

Direct oil cooling significantly outperforms indirect water cooling allowing to:

- Achieve lower temperature even for reduced pumping power;
- Create cooling strategies where the pump is triggered on demand to maintain temperature below a threshold.

Direct vs Indirect cooling in a nutshell

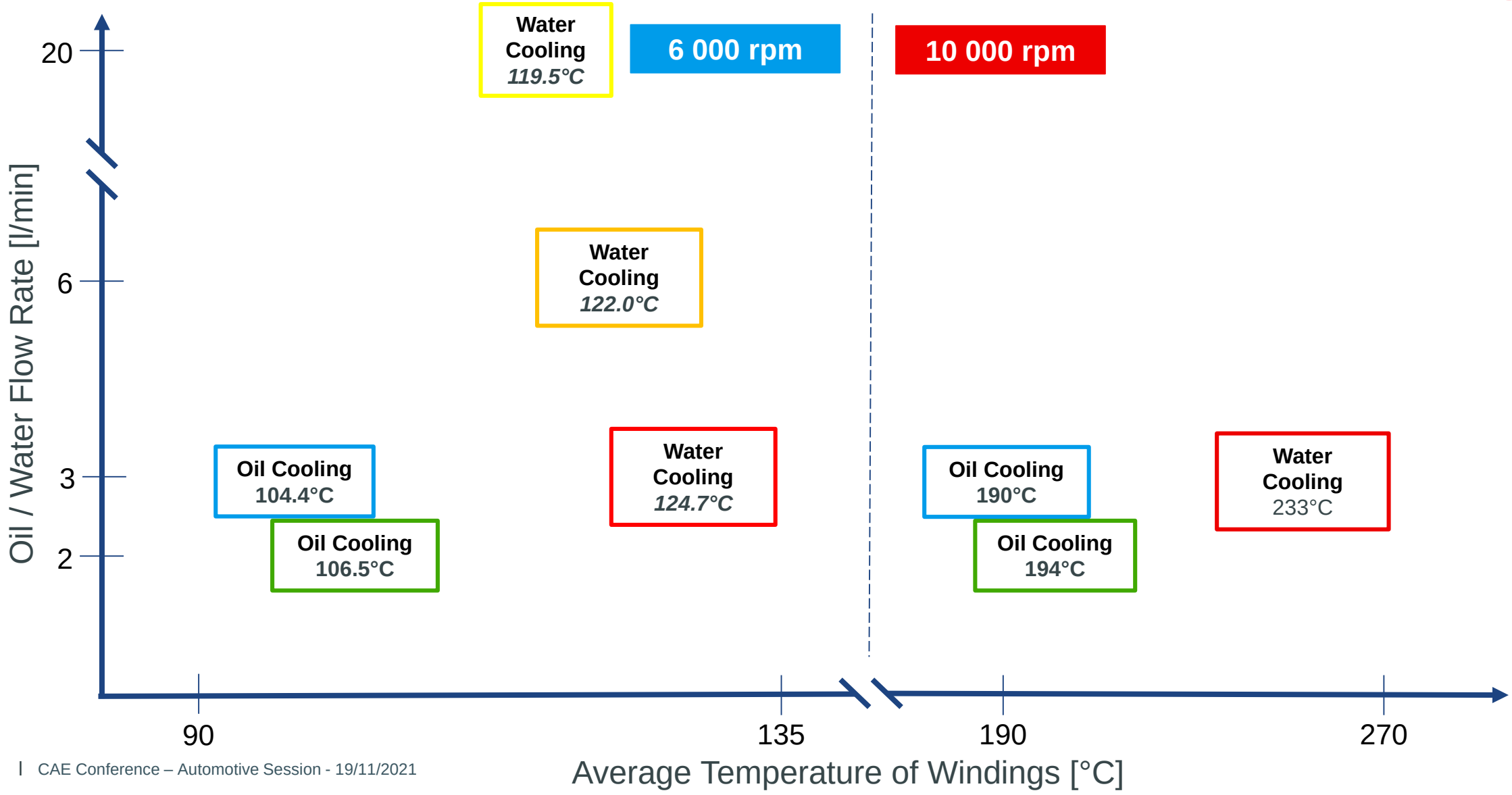

Designing the most efficients cooling fluids:

- Oil cooling @6k rpm and 3 l/min:

$$h \propto \frac{(\rho u)^{\frac{1}{2}} (C_p)^{\frac{1}{3}}}{\mu^{\frac{1}{6}}} k^{\frac{2}{3}}$$

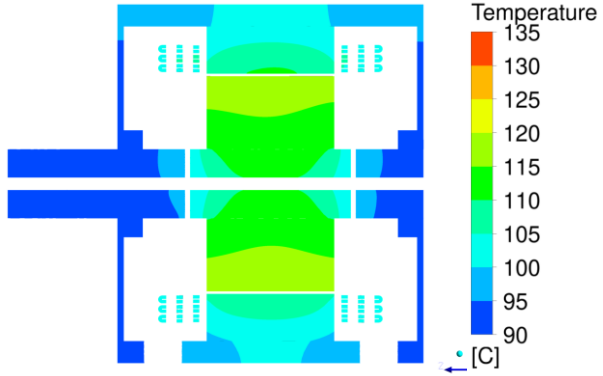

Viscosity x 1/3 | Conductivity x 2 | Heat capacity x 1,5 | Density x 1,18

	Oil Cooling System Reference Oil		Oil Cooling System Fluid 1		Oil Cooling System Fluid 2		Oil Cooling System Fluid 3		Oil Cooling System Fluid 4	
	Ave. Temp. [°C]	Max. Temp. [°C]	Ave. Temp. [°C]	Max. Temp. [°C]	Ave. Temp. [°C]	Max. Temp. [°C]	Ave. Temp. [°C]	Max. Temp. [°C]	Ave. Temp. [°C]	Max. Temp. [°C]
Housing	97.6	102	-2.2	-2.8	-2.5	-2.9	-0.9	-1	-0.3	-0.4
Stator	103.3	110.9	-2.2	-2.7	-2.5	-3.2	-0.9	-1.3	-0.3	-0.3
Resin	105.6	110.6	-2.2	-2.5	-2.8	-3.1	-1.1	-1.3	-0.4	-0.3
Windings	104.4	110.2	-1.9	-2.3	-2.7	-3.2	-1	-1.2	-0.3	-0.5
Rotor	115.7	125	-1.5	-3.5	-2.3	-4.5	-0.8	-3.1	-0.3	0.2
Magnets	120.1	124.8	-5.4	-3.5	-6.8	-4.5	-5.4	-3.1	0.9	0.3
Shaft	98.7	113.6	-5.1	-4.3	-6	-5.6	-4.5	-4.3	0.9	0.8

CONCLUSIONS:

- **Direct oil cooling completely outperforms** indirect water cooling simply because of its ability to **remove heat directly where is it produced**

- The increase of heat transfer achieved through **direct oil cooling offer new ways for improving the design of emotors:**
  - Increase of power density / downsizing;
  - Use of magnets with lower demagnetization factor;
  - Intermittent cooling;
  - Etc.

- **Fully numerical approaches** can be used to improve the formulation of cooling fluids for EVs.

Thank you for your attention

Jonathan.raisin@totalenergies.com
Khalid.ait-hammou@totalenergies.com