Thermal Simulation of an Oil Cooled E-Motor

Martin Brada
Thermal Systems Engineer, Ricardo China

Introduction

- Collaboration between Ricardo and Enginsoft on thermal assessment of an oil cooled electric motor
- Enginsoft in charge of running particle-based CFD simulation
- Ricardo responsible for steady state thermal modelling and experimental validation of temperature

Martin Brada
Thermal Systems Engineer
Ricardo China

Antoine Dubreuil
Department Leader Mechanical Analysis
Ricardo China

Michele Merelli
CAE Engineer
EnginSoft Italy

David Percival
Project Engineer
EnginSoft UK

Motivation

- Fluid simulation was carried out by means of particle-based CFD software Particleworks using Moving Particle Simulation (MPS) method
- Particle-based CFD methods are generally considered as more efficient tools for complex multiphase flows compared to traditional CFD based on finite volume method in terms of computational runtime and pre-processing
- Prototype testing is expensive, lengthy and does not allow for an actual fast iterative design process

Motor geometry

- The geometry comprises of a rotor with 12 jets in 3 sets targeting the stator windings
- The cooling liquid is fed through the shaft
- 4 orifices on either side of the shaft form jets impinging the ends of the stator windings
- The shaft has one more set of channels that lead the oil through the rotor body along the magnets to 4 more orifices in the right end cap of the rotor

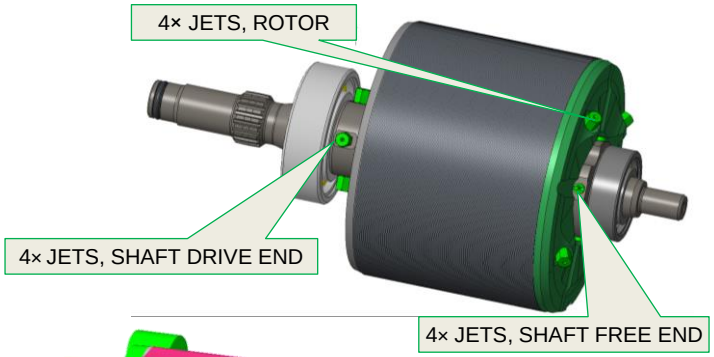

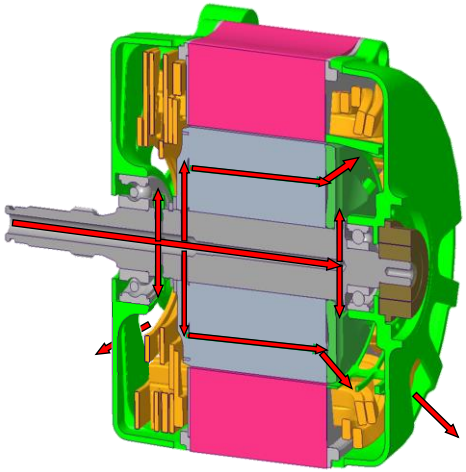

Particle-based CFD

FLUID SIMULATION

Fluid Simulation Process

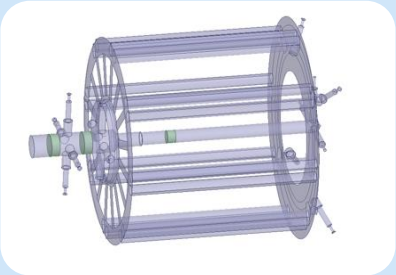

Internal flow: Flow split among the nozzles

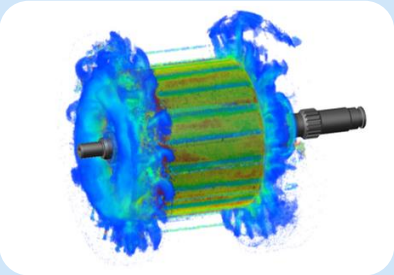

Air flow simulation with larger particles

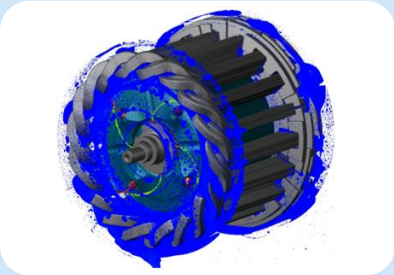

Final oil simulation with air flow imposed on the oil particles

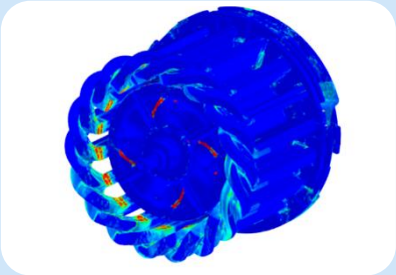

HTC map generated from the air and oil flow field

Internal Flow

- Simulation of the internal flow in order to determine the flow split among different nozzles
- Particle size: 0.2 mm (~2.5 million particles)
- Liquid used: automatic transmission fluid
- Volumetric inflow: 1.93 l/min
- Rotor speed: 2529 rpm

Internal Flow

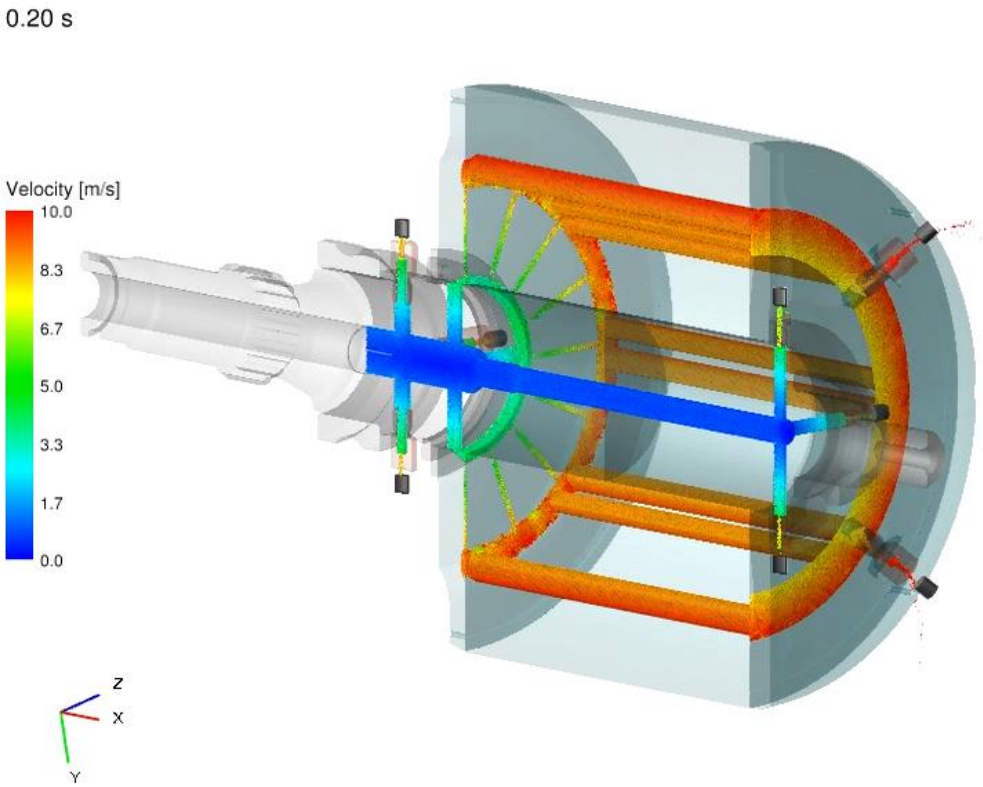

Internal Flow

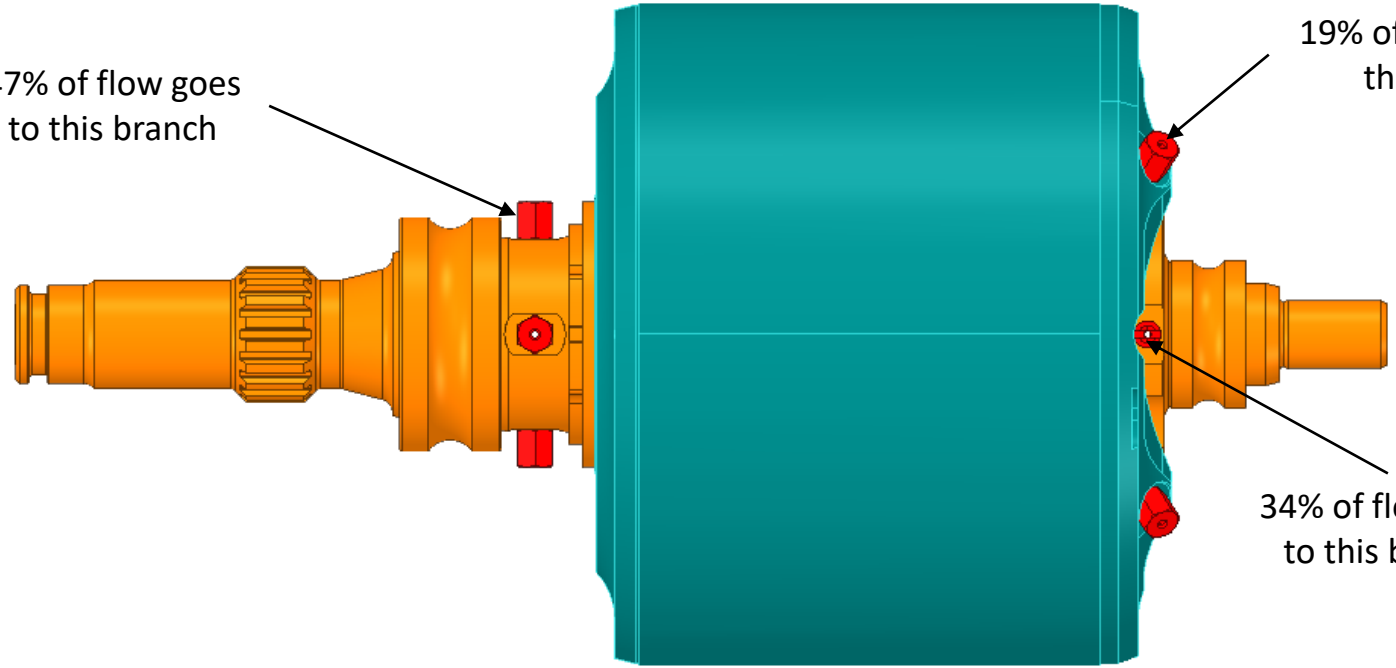

Air Flow

- Air flow plays a significant role at higher rotational speed and air therefore cannot be completely neglected
- A true two phase simulation is typically much more computationally expensive as it may increase the total number of particles several times or even by an order of magnitude depending on the application
- Particleworks software allows for decoupling the oil and air simulation with the capability to map the air flow field from an external CFD simulation or a different Particleworks simulation

Air Flow

One phase simulation with air particle size 0.5 mm (~6.1 million particles) → Export air velocity field in steady state → Oil simulation using Particleworks with imported air flow field. Oil particle size = 0.2mm → Liquid flow under the effect of rotation and of imported air flow

- The oil flow is calculated by Particleworks using an adequate particle size to discretize the oil phase and the oil injections
- Air uses coarser 0.5mm resolution, which results in $(0.5/0.2)^3 \approx 16\times$ less air particles compared to a true two-phase simulation
- With this approach, the air effect on the oil flow is accounted for but the effect of the oil flow on the air flow is neglected

Air Flow

Note: Slow particles (less than 0.25m/s) are not being shown

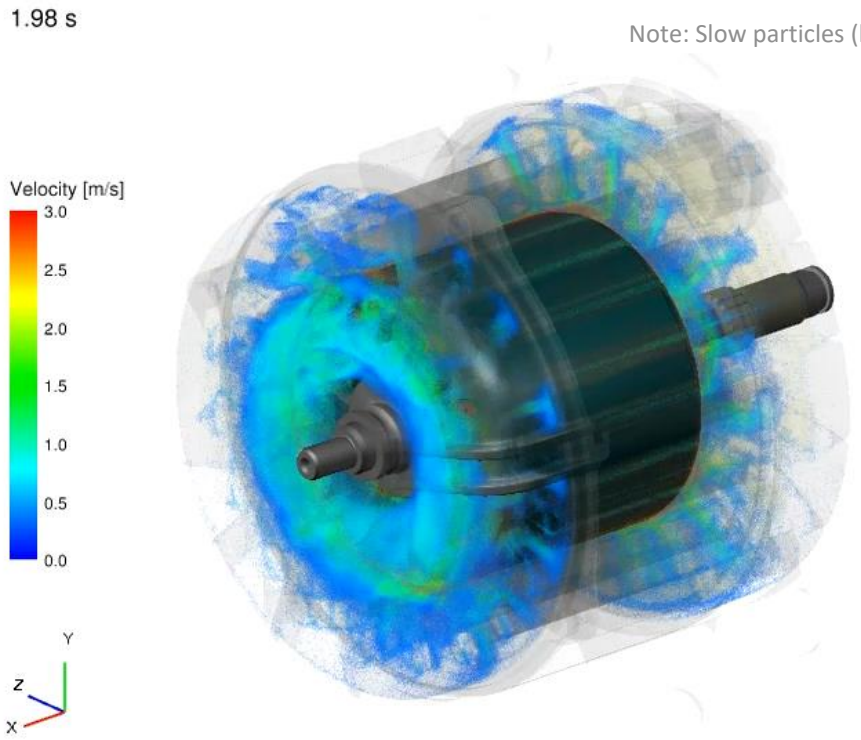

Oil Flow

- Interpolated air flow field from the previous step was imported and imposed on the computational domain
- Oil nozzles were prescribed flow rates from the first internal flow simulation (inlets rotate together with the rotor)
- Oil particle size: 0.2 mm

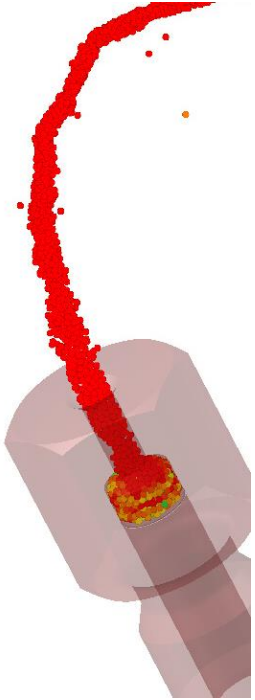

Oil Flow

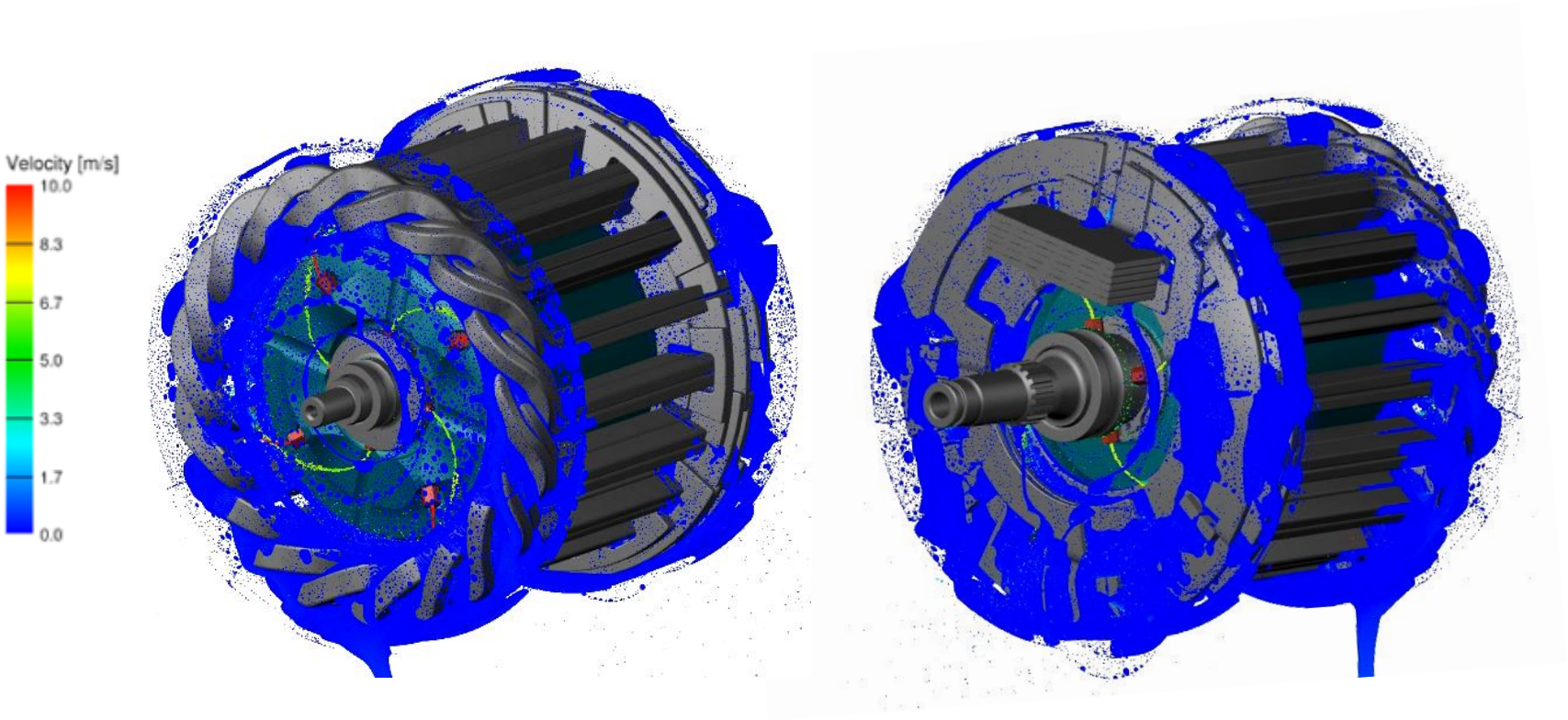

Oil Flow

- 6 days to run 3 seconds on one NVidia V100 GPU
- Simulation solution slows down during its progress as the number of particles in the domain gradually increases
- Less conservative values for the particle size and time step could be used for further reduction of the simulation runtime
- HTC results averaged over the last 0.3 s and exported

Oil Flow – HTC mapping

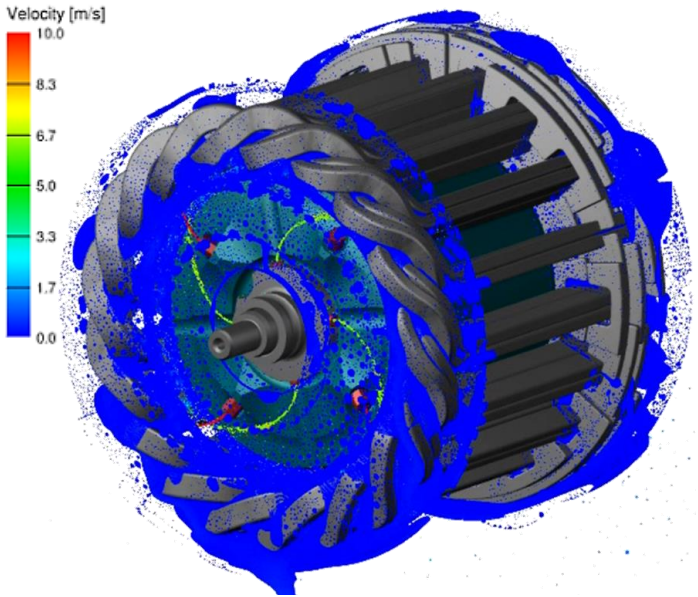

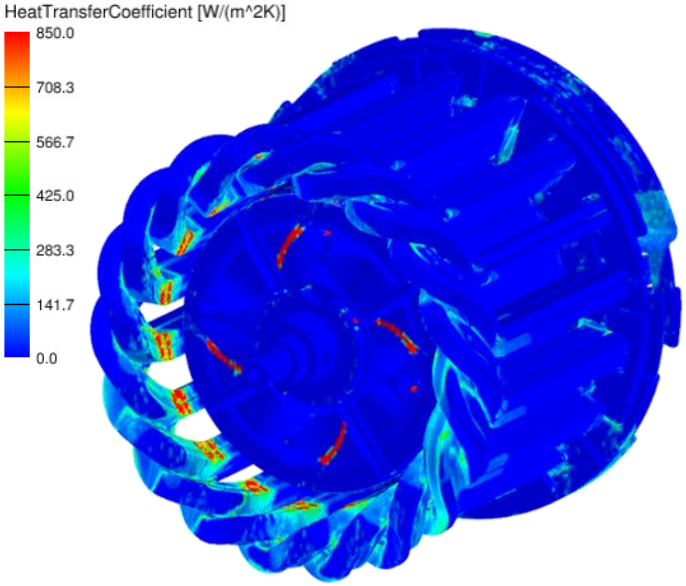

Steady state finite element analysis

THERMAL SIMULATION

FE Thermal Simulation

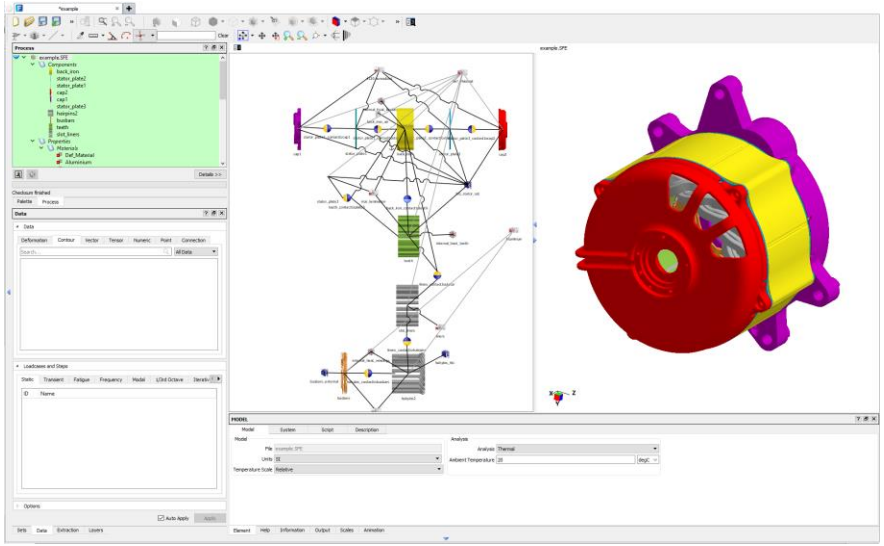

- Thermal steady state simulation was carried out in FEARCE 2020.2 (Ricardo Software)
- Only the stator components and windings were considered in the model as there were no temperature data from the rotor

FE Thermal Simulation

- Heat sources were defined according to the experimental operating conditions
- Temperature was monitored at 6 locations on the windings according to the experimental setup
- HTC maps based on the CFD results were imported

FE Thermal Simulation

- The HTC values from Particleworks were modified in order to take the insulation of the windings (not modelled) into account and then mapped on the FE model geometry
- The modification of HTC (*h*) was applied according to the formula for overall heat transfer coefficient (h_{mod}), where *t* and *k* are thickness and thermal conductivity of the insulation respectively:

$$h_{mod} = \frac{1}{\frac{1}{h} + \frac{t}{k}}$$

FE Thermal Simulation – Temperature Field

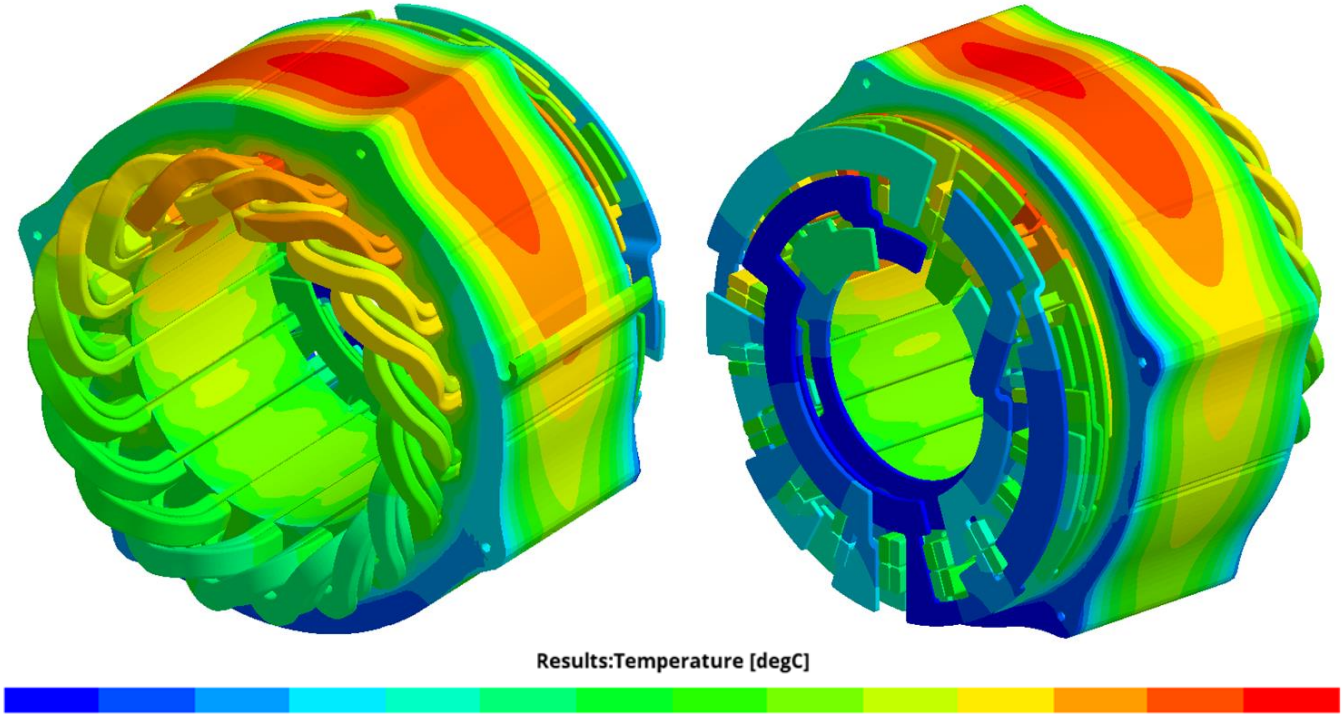

FE Thermal Simulation - Validation
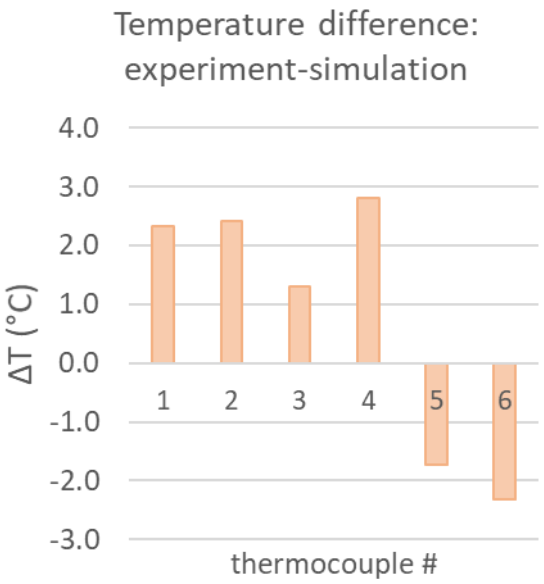
- The results have been evaluated in terms of absolute difference between the measured temperature and temperature from the simulation
- Ricardo aim for a match within ±5 °C
- All points met this criterion with a maximum difference of +2.8 °C