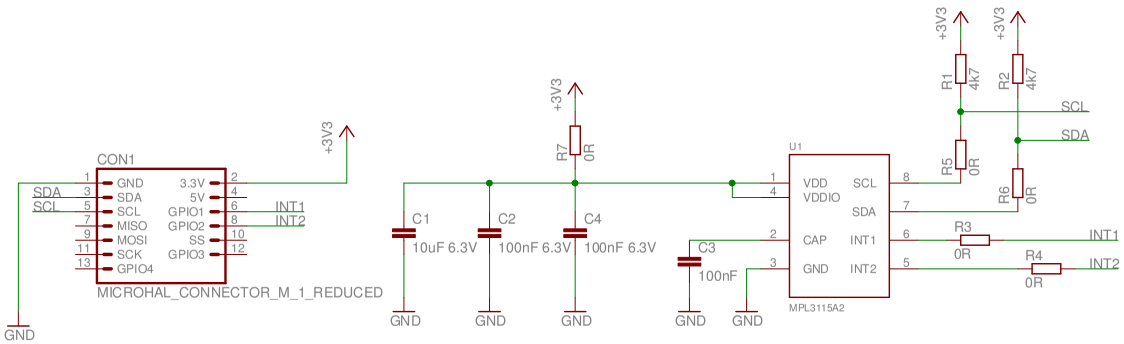

microHAL	www.microhal.org
	MPL3115A2
	09.01.2016 23:11
	Sheet: 1/1