ATMEGA4809-CNANO MPPB-Adapter

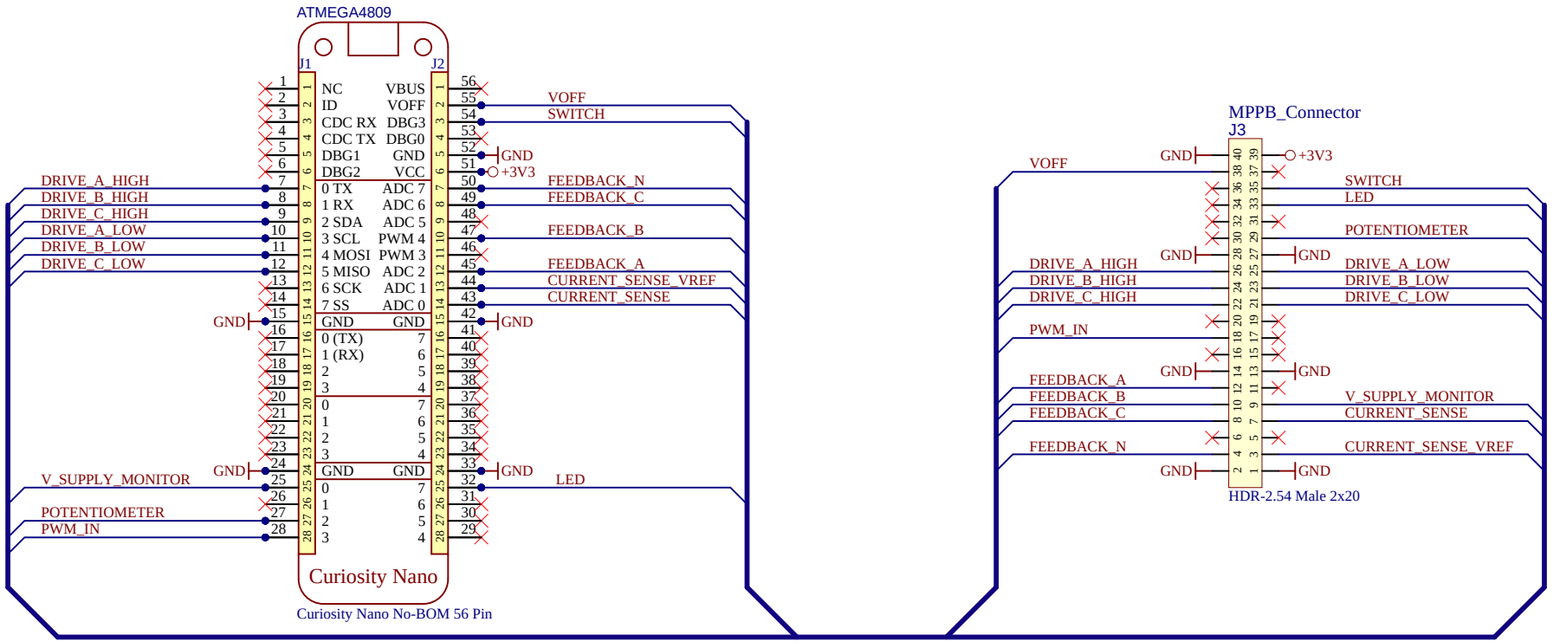

PAD1
Rubber Pad Cyl D7.9H5.3

PAD2
Rubber Pad Cyl D7.9H5.3

TEST1
$ >_
13-00902

LABEL1
[ASSY# / REV]
SN: [SERIAL]
[DATE yyyy.mm.dd]
PCBA LABEL 18X6mm

S3
AVR128DA48-CNANO_MPPB-Adapter_Revision_History.SchDoc

CNANO Template Revision: 2.5

Project Owner: PB	MICROCHIP
PCB Layout Contact: PB	
PartNumber: EV59R80A	Project Title: ATMEGA4809-CNANO MPPB-Adapter — Variant: Default Assembly
Sheet Title: Adapter	Designed with Altium — Altium.com
Size: A3	SCH #: 02-01018 Rev: 2 Date: 2/12/2026
	PCB #: 04-12088 Rev: 2 Sheet 1 of 2
File: ATMEGA4809-CNANO_MPPB-Adapter.SchDoc	

Revision History

PCB Assembly Rev 1:

Design Changes:

Initial Design

PCB:

PCB revision 1

PCB Assembly Rev 2:

Design Changes:

Net name and silk changes

PCB:

PCB revision 2

CNANO Template Revision: 2.5

Project Owner: PB			
PCB Layout Contact: PB			
PartNumber: EV59R80A	Project Title: *ATMEGA4809-CNANO MPPB-Adapter*	Variant: Default Assembly	
Sheet Title: Revision History			Designed with Altium.com
Size A3	SCH #: 02-01018	Rev: 2	Date: 2/12/2026
	PCB #: 04-12088	Rev: 2	Sheet 2 of 2
File: ATMEGA4809-CNANO_MPPB-Adapter_Revision_History.SchDoc			