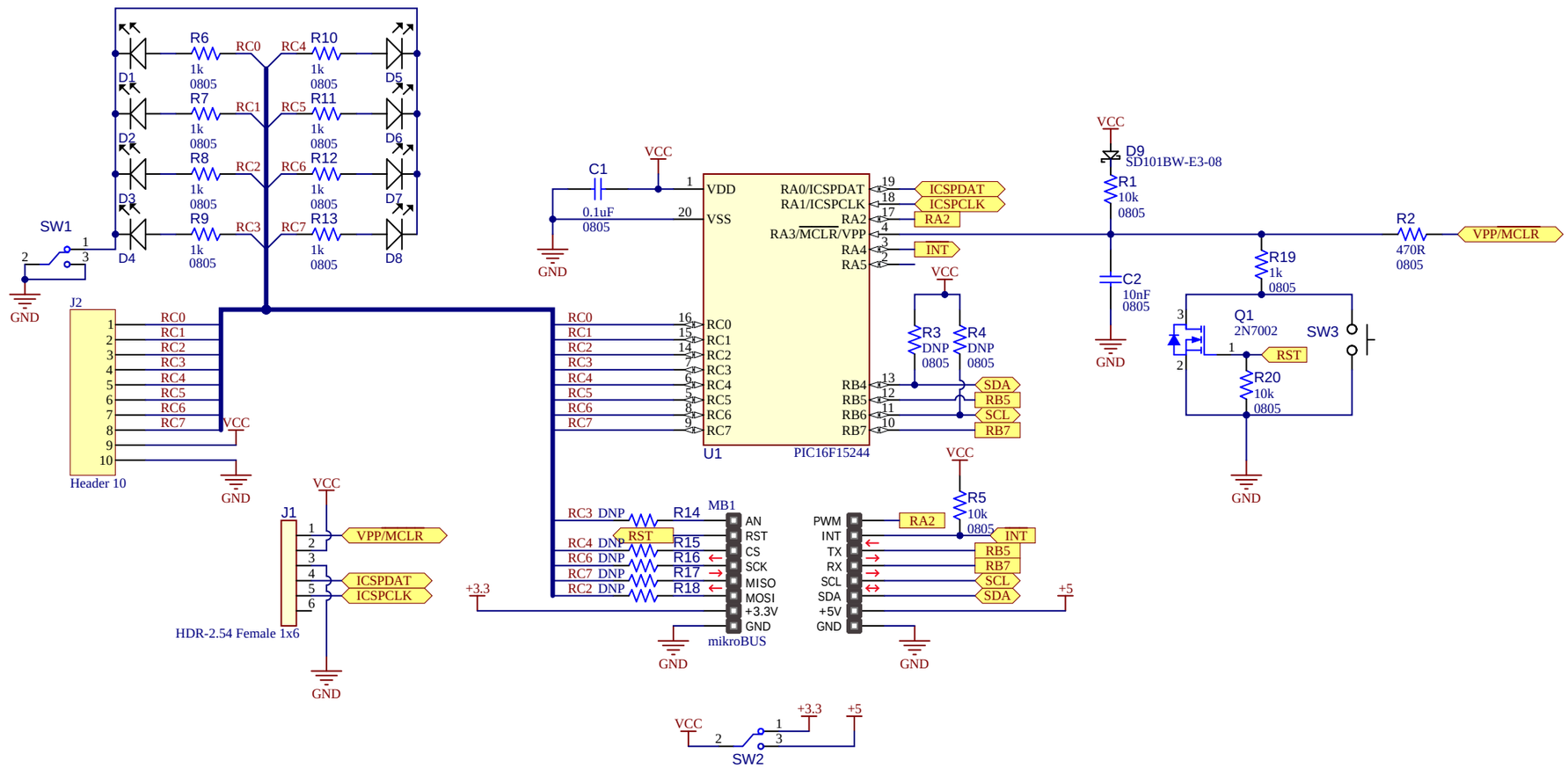

Project Owner: Robert Perkel			
PCB Layout Contact: Robert Perkel			
PartNumber: **	Project Title: *I/O Expander - PIC16F15244*	Variant: [No Variations]	
Sheet Title: **			Designed with Altium
Size B	SCH #: 03-**	Rev: **	Date: 2/18/2022
	PCB #: 04-**	Rev: **	Sheet 1 of 1
File: IO Expander 152xx.SchDoc			Altium.com