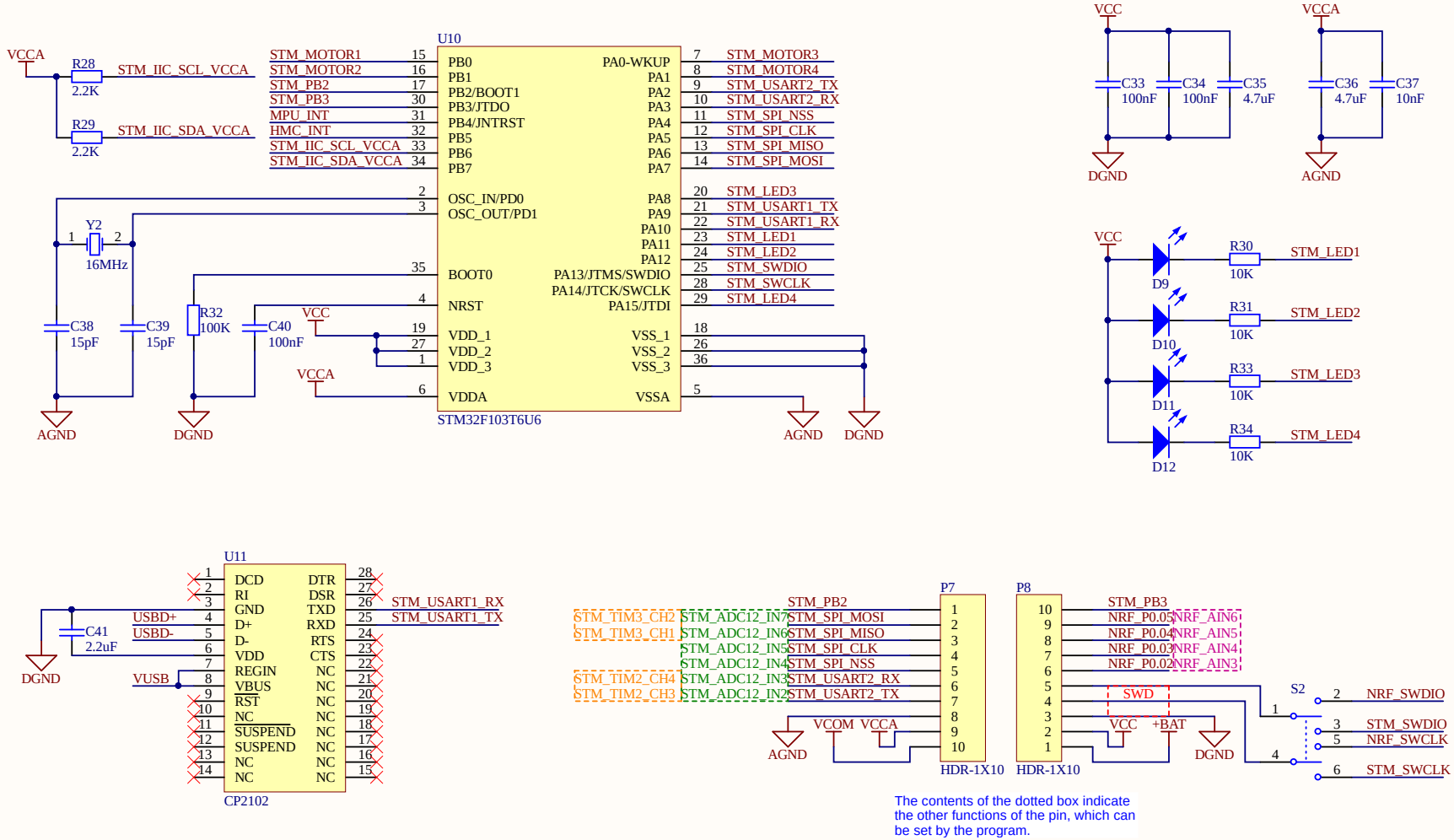

Title **Breeze Quadcopter**			*Team MicroDynamics NWPU Xi'an Shannxi China*
Size: A4	Author: myyerrol	Revision: V0.1	
Date: 3/12/2017	Time: 15:17:20	Sheet 1 of 5	
File: breeze_controller.SchDoc			