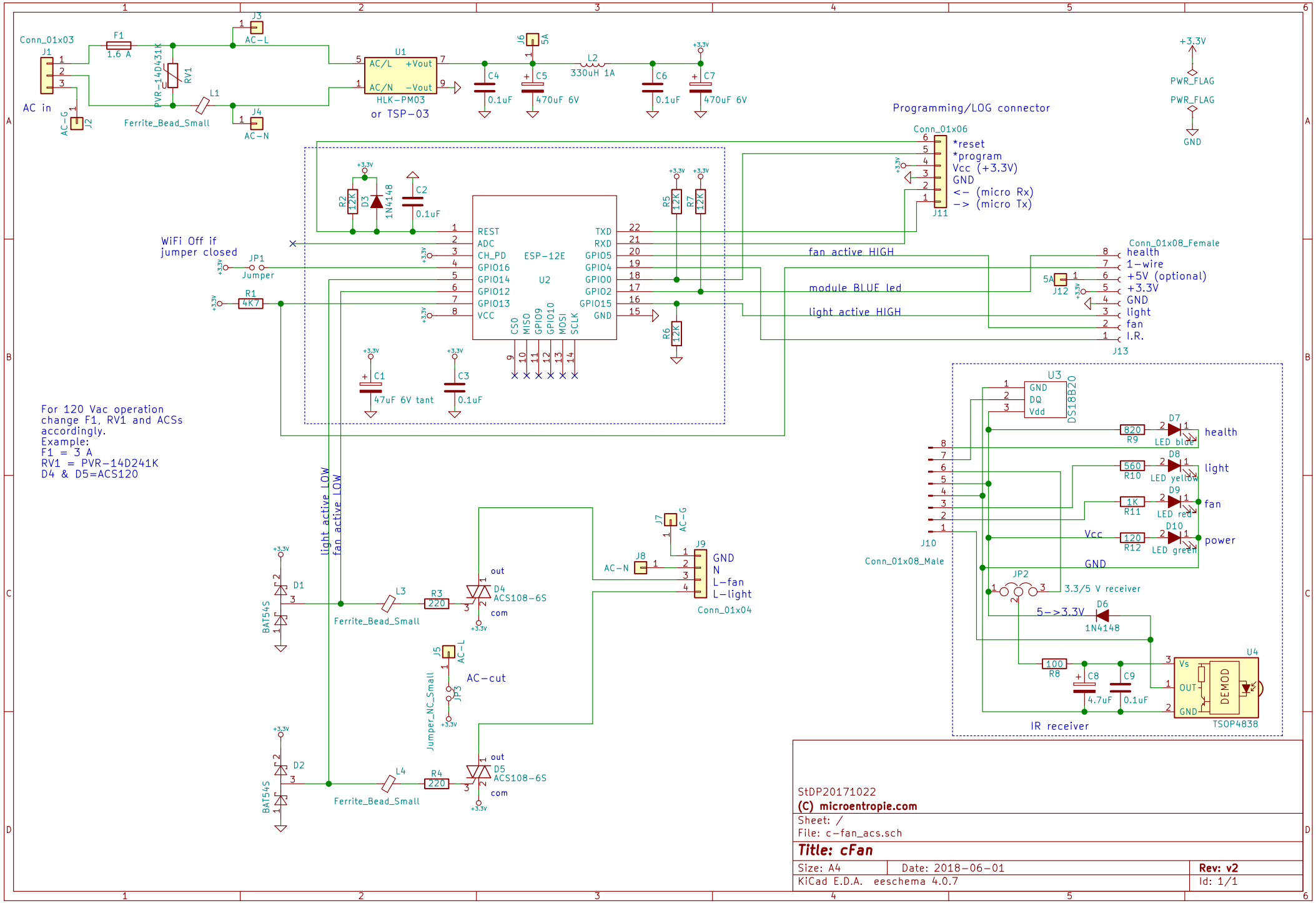

StDP20171022

(C) microentropie.com

Sheet: /

File: c-fan_acs.sch

Title: cFan

Size: A4	Date: 2018-06-01	**Rev: v2**
KiCad E.D.A. eeschema 4.0.7		Id: 1/1