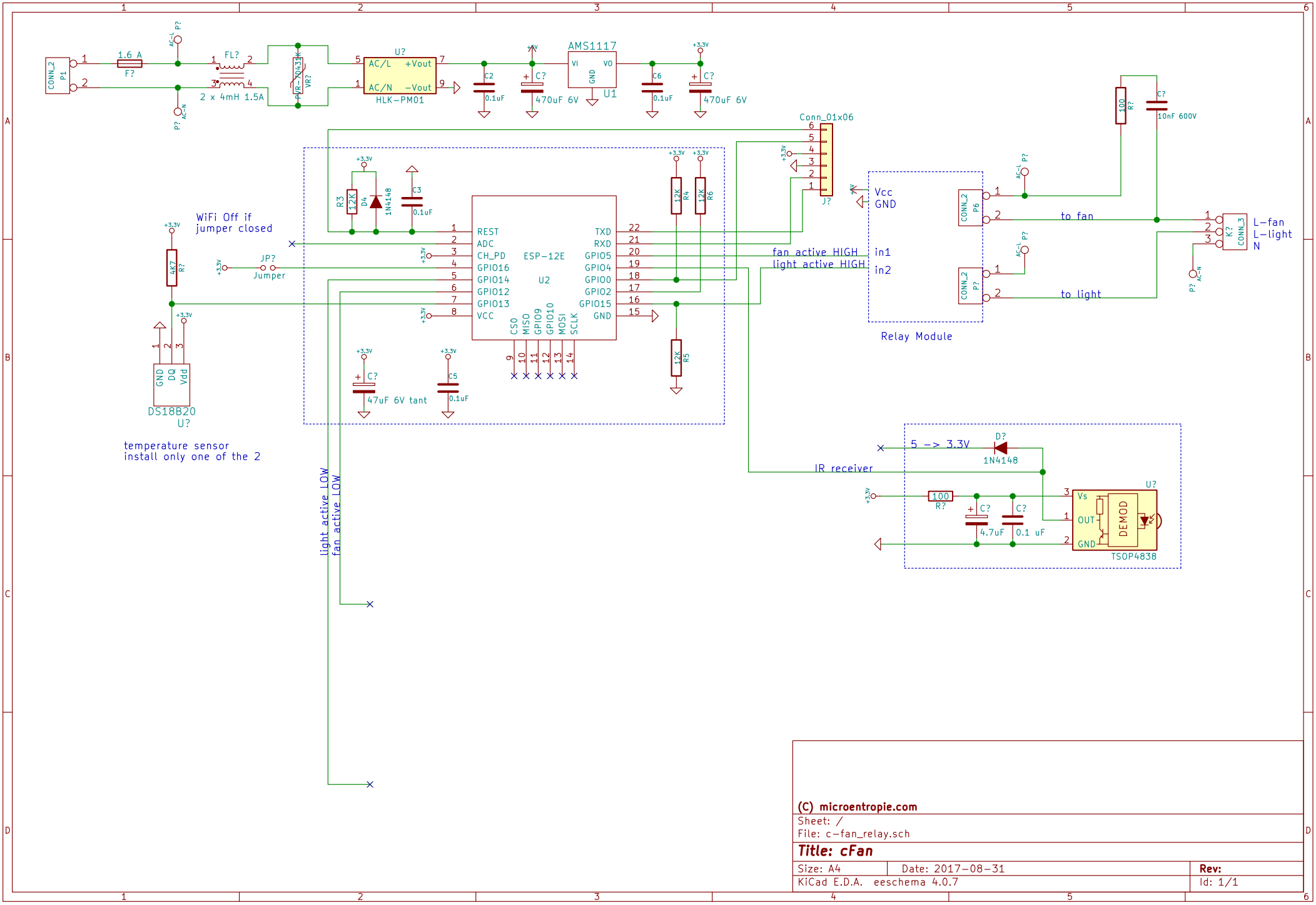

(C) microentropie.com

Sheet: /

File: c-fan_relay.sch

Title: cFan

Size: A4	Date: 2017-08-31	Rev:
KiCad E.D.A. eeschema 4.0.7		Id: 1/1