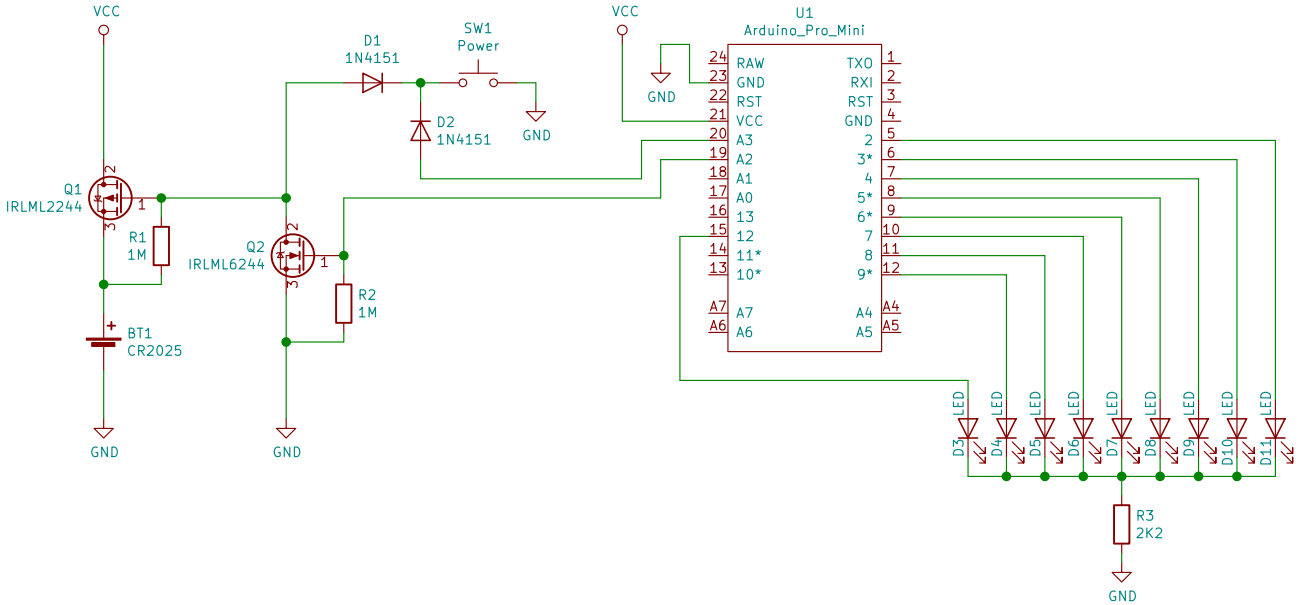

Copyright (C) 2019, Karim Hraibi
Please visit:
www.microfarad.de/toothbrush-timer
www.github.com/microfarad-de/toothbrush-timer
µF

Sheet: /
File: toothbrush-timer.sch

Title: Arduino Toothbrush Timer

Size: User	Date: 2019-03-22	**Rev:**
KiCad E.D.A. kicad (5.0.1-3-g963ef8bb5)		Id: 1/1