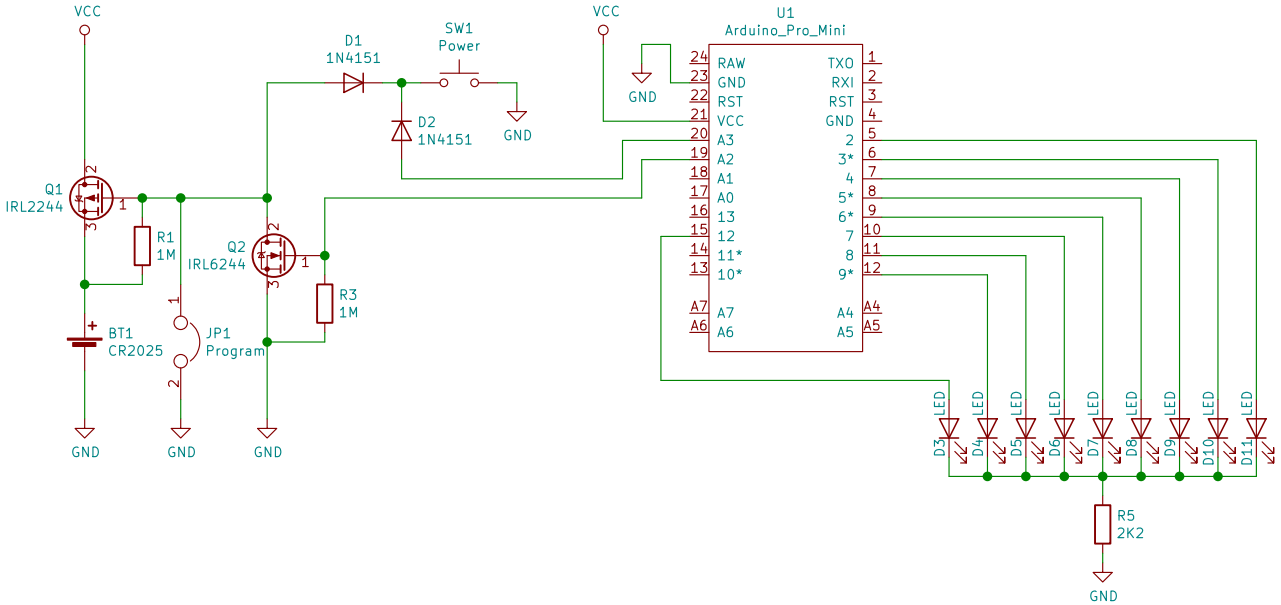

Copyright (C) 2019, Karim Hraibi
Please visit:
www.microfarad.de
www.github.com/microfarad-de
microfarad.de

Sheet: /
File: brush-timer.sch

Title: Arduino Toothbrush Timer

Size: User	Date: 2019-02-20	**Rev:**
KiCad E.D.A. kicad (5.0.1-3-g963ef8bb5)		Id: 1/1