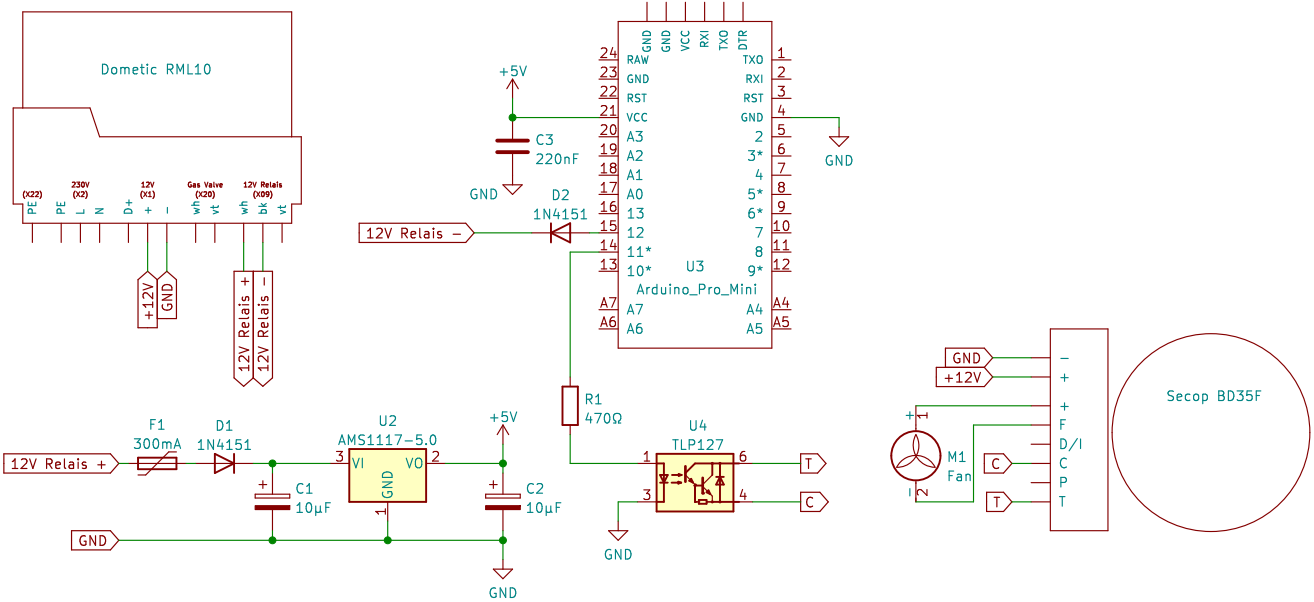

Adapts the 12V relais output of the Dometic RML10 absorber fridge
to the thermostat input of the Secop BD35F compressor control unit.
Enables variable speed control over 5 kHz PWM signal.

Copyright (C) 2025, Karim Hraibi

Sheet: /
File: fridge-controller.kicad_sch

Title: Secop BD35F Compressor Speed Controller

Size: A5	Date: 2025-02-20	**Rev:**
KiCad E.D.A. kicad (6.0.5-0)		Id: 1/1