Nixie Clock

USER MANUAL

Copyright © 2026 Karim Hraibi

Please visit:
http://www.microfarad.de/nixie-clock
https://github.com/microfarad-de/nixie-clock

March 29, 2026

Table of Contents

List of Figures **1**

List of Tables **1**

Introduction **2**

Hardware **4**

Menu Structure **5**

Display **6**

Settings Menu **7**

Specifications **8**

List of Figures

Figure 1 – the Nixie Clock 2
Figure 2 – front view 4
Figure 3 – rear view 4
Figure 4 – navigation structure 5
Figure 5 – IN-8-2 Nixie tube dimensions and pinout 9

List of Tables

Table 1 – information displayed on the Nixie Tubes 6
Table 2 – settings menu 7
Table 3 – specifications 8
Table 4 – IN-8-2 Nixie tube specification 8
Table 5 – IN-8-2 Nixie tube pinout 9

Introduction

Figure 1 – the Nixie Clock

This user manual provides the operating instructions of the radio-controlled Nixie Clock that is shown in Figure 1.

The Nixie Clock is built around six IN-8-2 Soviet-made Nixie tubes. This kind of tubes can display digit values from 0 to 9, complemented by a decimal point at the bottom-right side of the digit. These were produced at the Melz Tube Factory in Moscow. In contrast to other Soviet tubes (like the IN-14), these tubes have slightly larger digits relative to the overall tube height and do not use an inverted “2” for the digit “5” (a common cost-saving practice for the Soviet tubes of the same era).

The clock runs off a 12 Volt power supply, however the Nixie tubes require a high anode voltage of approximately 180 Volts. The 12 Volts are up-converted using an off-the-shelf DC-DC converter. This ensures an adequate galvanic separation from the mains power supply. The tubes cathodes are driven by a K155ID1 cathode driver IC, which is a BCD-to-decimal decoder especially designed for this purpose. Each of the anodes is driven via a dedicated opto-coupler (TLP 127).

The clock’s CPU is an Atmel ATmega328P microcontroller which runs on an off-the-shelf Arduino Pro Mini clone board. The CPU has a clock frequency is 16 MHz, 2 Kilobytes of RAM and 1 Kilobyte of EEPROM. It features two separate programmable timers. Timer 1 is used for the main timekeeping, while lower resolution Timer 2 supplies the clock signal for the Countdown Timer and Stopwatch features.

The microcontroller drives the Nixie tubes via multiplexing. Which means that only one Nixie tube can be lit at any single moment in time. One single K155ID1 cathode driver chip is used for driving the cathodes of the tubes in parallel. Each of the anodes is individually driven using its own opto-coupler. The microcontroller quickly cycles through the individual digits, while the persistence of the human vision creates the illusion that all the digits are being simultaneously lit.

The brightness of the Nixie tubes is automatically adjusted to match the ambient lighting conditions. A photo-resistor is used for measuring the ambient light intensity. Brightness is controlled by varying the power-on duty cycle of the Nixie tubes.

Nixie tubes suffer from an effect called “Cathode Poisoning”. Whereas the cathodes of the digits that are not being regularly lit get contaminated by deposits emerging from more frequently lit neighboring digits. These deposits eventually lead to the partial or total failure of the affected cathodes. In order to counter this effect, the Nixie Clock ensures that all of the digits are being periodically lit by using one of the Cathode Poisoning Prevention (CPP) routines described in the setting codes 5.1 and 5.2 in Table 2.

This clock has a built-in receiver for the DCF77 time signal. DCF77 is a German longwave time signal and standard-frequency radio station. It started service as a standard-frequency station on 1 January 1959. In June 1973 date and time information was added. Its primary and backup transmitter are located at 50°0’56”N 9°00’39”E in Mainflingen, about 25 km south-east of Frankfurt am Main, Germany. The transmitter generates a nominal power of 50 kW, of which about 30 to 35 kW can be radiated via a T-antenna. The DCF77 signal can be received within a range of around 2000 km away from the transmitter.

The time keeping is based on the 16 MHz free-running oscillator of the Arduino Pro Mini. This oscillator is rather inaccurate and would yield, if used without any compensation measure, to a clock drift of the order of tens of seconds per day. The Nixie Clock actively compensates for this clock drift by periodically calibrating the oscillator against the DCF77 time signal. The current calibration value can be seen in the service menu as code 3 (see Table 1).

The Nixie Clock uses a super-capacitor to provide backup power for the event of a main power loss. Once main power is disconnected, the microcontroller backs-up all the settings to EEPROM and switches to a power-saving mode while continuing the timekeeping with the usual accuracy. Once the super-capacitor voltage drops below a certain threshold, the microcontroller switches into the next level of power saving by powering down most of the hardware peripherals, including Timer 1 which is used for the main timekeeping; timekeeping will continue with a reduced accuracy using the watchdog hardware.

Following is the full list of the Nixie Clock features:

- 6 IN-8-2 Nixie tubes featuring 0-9 digits and decimal points
- Multiplexed display, requires one single K155ID1 Nixie driver chip
- Synchronization with the DCF77 time signal
- Automatic oscillator calibration against the DCF77 time signal with 1/64 microsecond accuracy
- Multiple time zone support with manual or automatic daylight saving time
- Backup power from a built-in super-capacitor
- Dual timers: Timer1 used for timekeeping and Timer2 for countdown timer / stopwatch
- Automatic and manual display brightness adjustment
- Menu navigation using 3 push-buttons
- Alarm clock with the weekday and weekend options
- Countdown timer
- Stopwatch
- Service menu
- Cathode poisoning prevention and the "Slot machine" effect
- Screen blanking with dual time intervals
- Settings are stored to EEPROM

WARNING: The Nixie tubes are driven using a high anode voltage of approximately 180 Volts. The 12 Volt power supply is up-converted using an off-the-shelf DC-DC converter; thus, ensuring an adequate galvanic separation from the mains power supply. Needless to say that the required the precautions must be taken while operating the Nixie Clock in order to avoid the hazard of an electric shock.

Hardware

The Nixie Clock has been built with simplicity in mind. The Display consists of 6 Nixie tubes that are complemented by 3 hardware buttons, an ambient light sensor and a DC power connector.

Figure 2 and Figure 3 shows the overview of the Nixie Clock's front and back panels with the following elements:

1. "-": decrease button
2. "o": menu button
3. "+": increase button
4. ambient light sensor
5. DC power connector (12 V / 1 A, pin: +, ring: -)

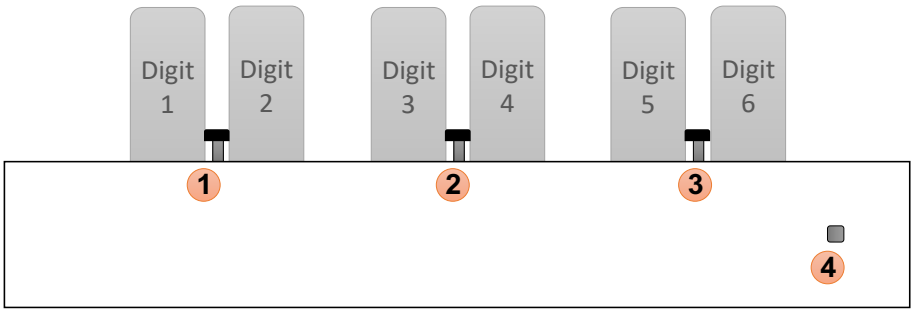

Figure 2 – front view

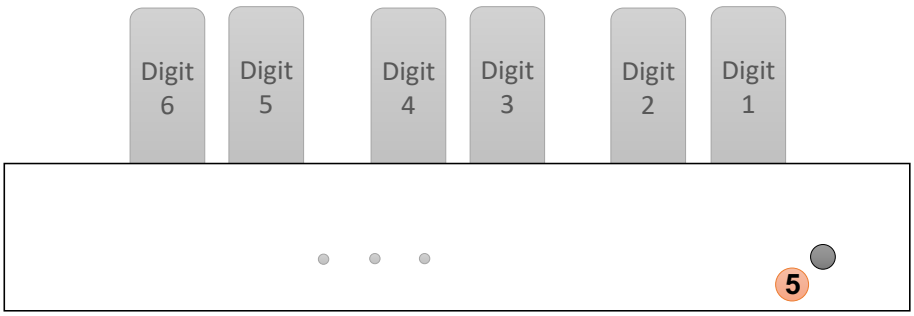

Figure 3 – rear view

Additionally, popping the rear cover will reveal the 6-pin connector which is used for updating the firmware of the Arduino Pro Mini using an off-the-shelve USB-to-serial adapter.

Menu Structure

The Nixie Clock features the following operation modes:

- Clock: used for timekeeping, it enables viewing and setting the time, date and alarm via the respective sub-modes
- Timer: countdown timer, alarm will ring once the timer expires
- Stopwatch: a stopwatch with a resolution of 1/10th of a second
- Service: shows the various service parameters and enables entering the settings mode
- Settings: adjust the Nixie Clock configuration parameters

Menu navigation is accomplished by short- or long-pressing one of the “o”, “+” and “-“ buttons.

Figure 4 shows the navigation structure of the Nixie Clock. Please note that a long button press is marked accordingly inside the diagram.

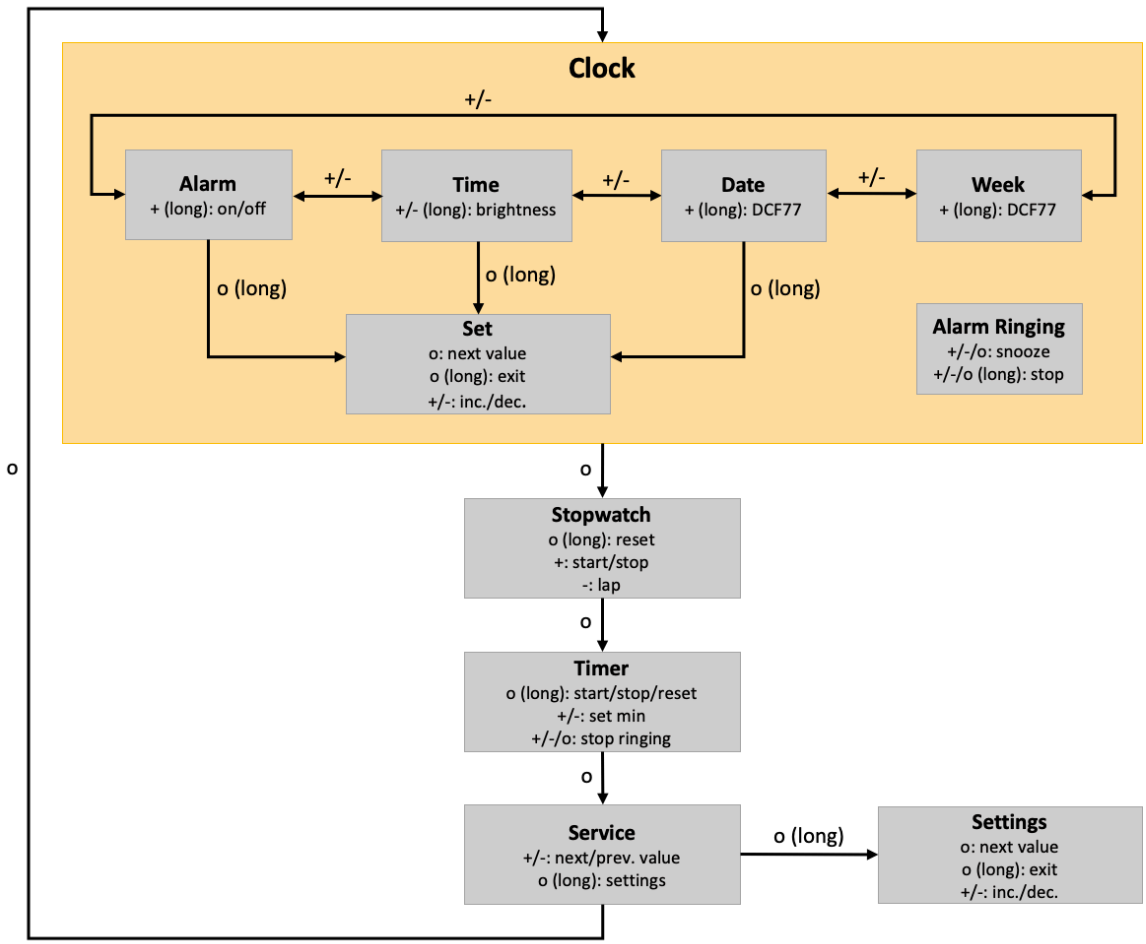

Figure 4 – navigation structure

The Nixie Clock will automatically switch back to the Time mode after 60 seconds of inactivity in any of the Alarm, Date, Service or Settings modes.

Display

The Nixie Clock is built around 6 IN-8-2 Nixie tubes. Each of the tubes can display a range of digits from 0 to 9 and a decimal point which is located on the bottom-left corner of each digit.

Depending on the mode of operation, the display of the Nixie Clock will show different numeric values, and light-up one or more decimal points (DP). Table 1 shows the meaning of the single digits and decimal points. The digits are grouped into pairs, whereas Digit 1 corresponds to the left Nixie tube while looking at the front of the device. An overview of the operation modes is shown in Figure 4.

Mode	Digits 1 and 2	Digits 3 and 4	Digits 5 and 6
Time	Hours	Minutes	Seconds
Date	Day	Month	Year: 00 = 2000… 99 = 2099
Week	Weekday: 1 = Monday… 7 = Sunday	Blank	Calendar week number[1]: 1… 53
Alarm	Hours	Minutes	Mode: 0 = off 2 = weekends 5 = weekdays 7 = every day
Timer	Hours	Minutes	Seconds
Stopwatch	Minutes DP = add 1 hour	Seconds	1/10 seconds
Service	Code[2]: 1 = calibration value[3] 2 = hours of operation[4] 3 = last DCF sync date 4 = last DCF sync time 5 = firmware version	Scrolling digits of the value currently shown	Scrolling digits of the value currently shown
Settings	Code (see Table 2)	Blank DP = negative value	Value

Table 1 – information displayed on the Nixie Tubes

The Nixie Clock displays time in the 24-hour mode. The date is displayed in the DD.MM.YY format. While setting the time, date or alarm, or while in the Settings mode; the value currently being set will be constantly blinking. The decimal points of Digits 5 and 6 have the same meaning for all modes and show the following information:

- Decimal Point 5: DCF77 live signal indicator (see setting code 2.2 in Table 2)
- Decimal Point 6:
    - When lit solid: alarm is enabled
    - When blinking: alarm snooze function active

[1] Calendar week 1 begins on January 1. Calendar week 2 begins on the first day of the following week. The first day of the week can be configured using setting code 1.3 as shown in Table 2.
[2] In the Service mode, the content of digits 1 and 2 will scroll away, giving place to further data content.
[3] The calibration value compensates for inaccuracies in the internal oscillator. It defines the duration of one second in microseconds. The fractional part (0–63) represents increments of 1/64 of a microsecond. This value is automatically updated after a successful synchronization with the DCF77 time signal.
[4] The total amount of Nixie tube operation time in hours. This value does not increment when the display is being blanked.

Settings Menu

In order to enter the settings menu (assuming the clock is in the time display mode) please press the “o” button in the following sequence:

“o” (short press) -> “o” (short press) -> “o” (short press) -> “o” (long press)

Once in the settings menu, you can shortly press the “o” button in order to jump to the next setting; then use the “+” and “-“ buttons to increase or decrease the corresponding value.

Table 2 provides an overview of the setting codes, their value ranges, and their functions.

Code	Min.	Max.	Description
Timekeeping			
1.1	-11	14	Time zone expressed as the time difference between UTC and the local time: 0 = UTC, 1 = CET, …
1.2	0	2	Daylight saving time: 0 = off, 1 = on, 2 = automatic
1.3	1	7	First day of the week: 1 = Monday… 7 = Sunday This setting affects the calculation of the displayed calendar week value.
1.4	-99	99	Clock drift compensation: enables the adjustment of the clock calibration value shown in Table 1
DCF77			
2.1	0	1	Sync to DCF77: 0 = off, 1 = on[5]
2.2	0	1	Live signal indicator while syncing: 0 = off, 1 = on
Screen Blanking – Profile 1			
3.1	0	4	Schedule: 0 = off, 1 = every day, 2 = on weekdays, 3 = on weekends, 4 = permanent
3.2	0	23	Start hour: turn on the display at the beginning of this hour
3.3	0	23	Stop hour: turn off the display at the beginning of this hour
Screen Blanking – Profile 2			
4.1	0	3	Schedule: 0 = off, 1 = every day, 2 = on weekdays, 3 = on weekends
4.2	0	23	Start hour: turn the display on at the beginning of this hour
4.3	0	23	Stop hour: turn the display off at the beginning of this hour
Cathode Poisoning Prevention (CPP)			
5.1	0	3	Mode: 0 = off 1 = cycle digits at full brightness during the pre-set hour 2 = run the "Slot Machine" effect every minute 3 = run the "Slot Machine" effect every 10 minutes
5.2	0	23	Start hour: run CPP during this hour (Mode 1 only)
Brightness			
6.1	0	1	Auto-brightness: 0 = off, 1 = on
4.2	0	1	Boost brightness: 0 = off, 1 = on

Table 2 – settings menu

[5] When enabled, DCF77 time synchronization runs once per week, every Sunday at 03:00. If the time has been manually adjusted, synchronization is instead performed at the next full hour.

Specifications

Table 3 provides the main technical specifications of the Nixie Clock.

Parameter	Value
Operating voltage	12 V
Operating current	~150 mA
Anode voltage	~180 V
Dimensions (without the Nixie tubes)	200 x 121 x 40 mm

Table 3 – specifications

Table 4 provides the technical specification of the IN-8-2 Nixie tube.

Parameter	Value
Type	IN-8-2 (ИН-8-2)
Brand	МЭЛЗ (Melz Tube Factory in Moscow, Russia)
Displayed symbols	0-9, Decimal Point (DP)
Digit height	18 mm (0.71")
Tube diameter nominal	18 mm (0.71")
Tube diameter maximal	19 mm (0.75")
Tube height bottom to top	55 mm (2.17")
Anode voltage maximal	200 V
Anode voltage minimal	170 V
Cathode current nominal (digit)	2.5 mA
Cathode current maximal (digit)	4.5 mA
Cathode current nominal (DP)	0.3 mA
Cathode current maximal (DP)	0.7 mA
Mass	12 g
Wire length	70 mm
Socket	No socket needed

Table 4 – IN-8-2 Nixie tube specification[6]

[6] Source: www.tube-tester.com

Figure 5 and Table 5 sow the dimensions and the pinout of the IN-8-2 Nixie tube.

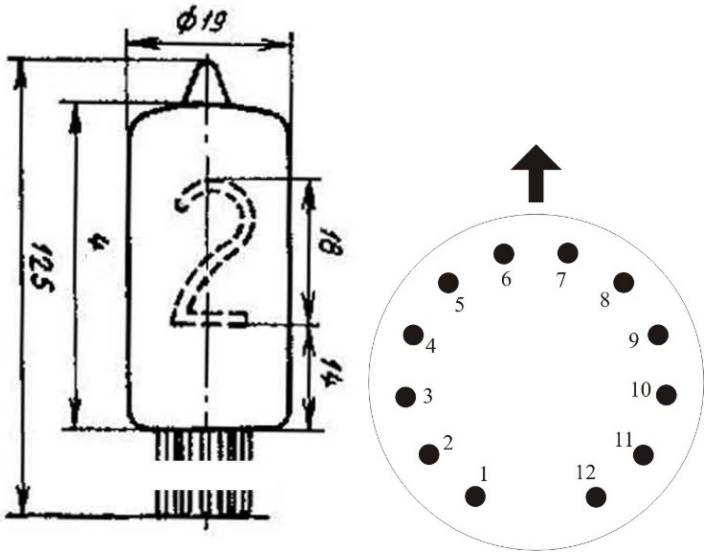

Figure 5 – IN-8-2 Nixie tube dimensions and pinout[7]

Pin	Connection
1	Cathode digit 1
2	Cathode digit 2
3	Cathode digit 3
4	Cathode digit 4
5	Cathode digit 5
6	Cathode digit 6
7	Cathode digit 7
8	Cathode DP
9	Cathode digit 8
10	Cathode digit 9
11	Cathode digit 0
12	Anode

Table 5 – IN-8-2 Nixie tube pinout

[7] Source: www.tube-tester.com