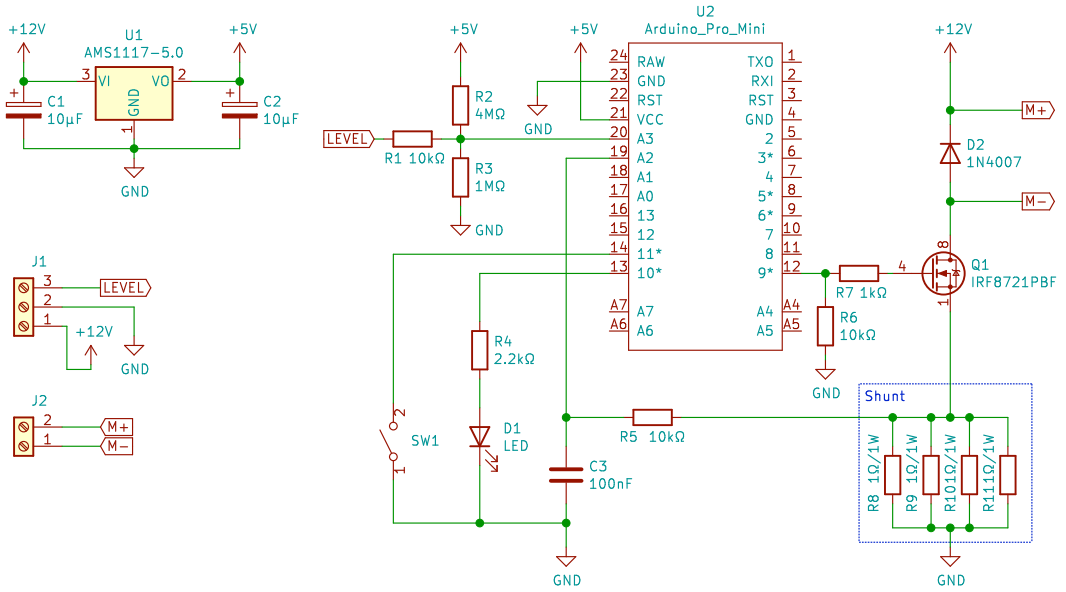

Copyright (C) 2022, Karim Hraibi
Please visit:
www.microfarad.de
www.github.com/microfarad-de/smart-pump
µF

Sheet: /
File: smart-pump.sch

Title: Smart Water Pump

Size: User	Date: 2022-05-03	**Rev:**
KiCad E.D.A. kicad (5.1.9-0-10_14)		Id: 1/1