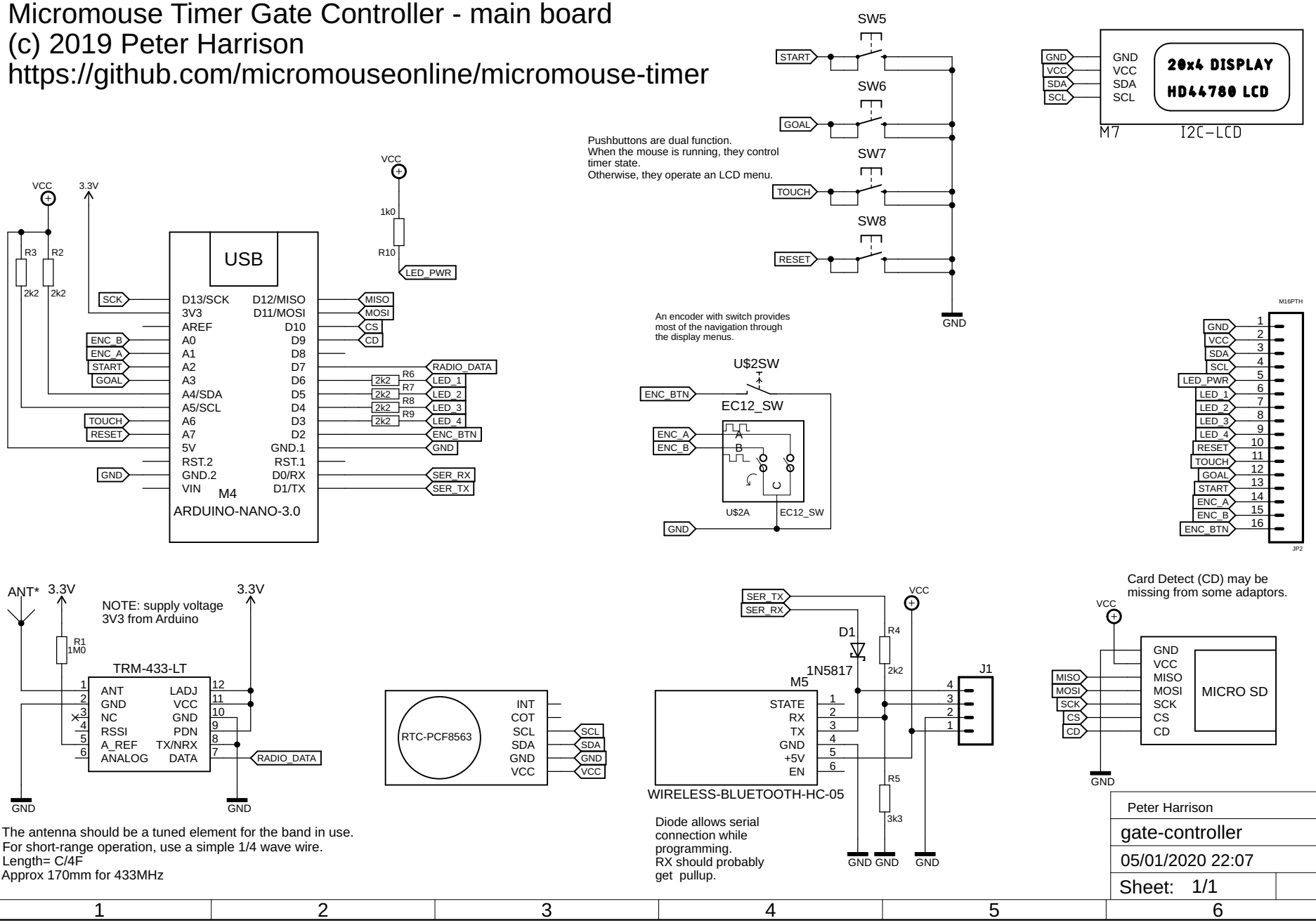Micromouse Timer Gate Controller - main board
(c) 2019 Peter Harrison
https://github.com/micromouseonline/micromouse-timer