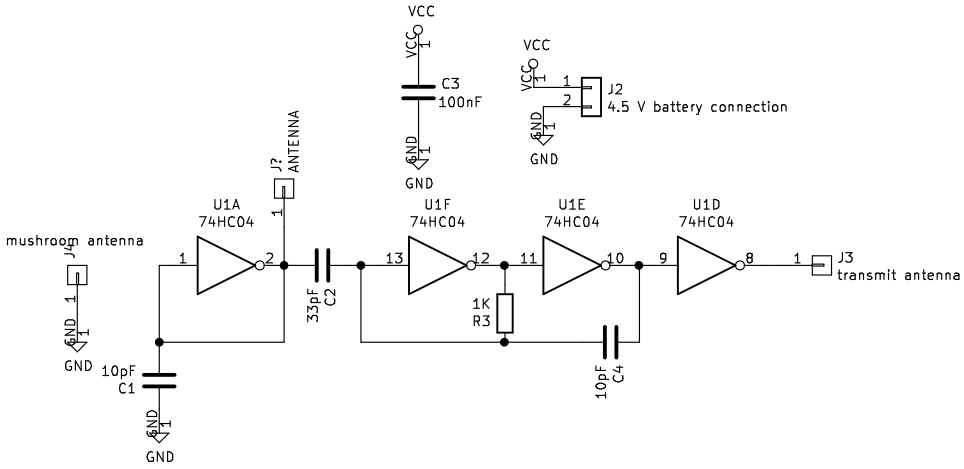

Sheet: /
File: small_mycelium.sch

Title:

Size: A4	Date:	**Rev:**
KiCad E.D.A. kicad (6.0.0-rc1-dev-209-g91e3d21d6)		Id: 1/1