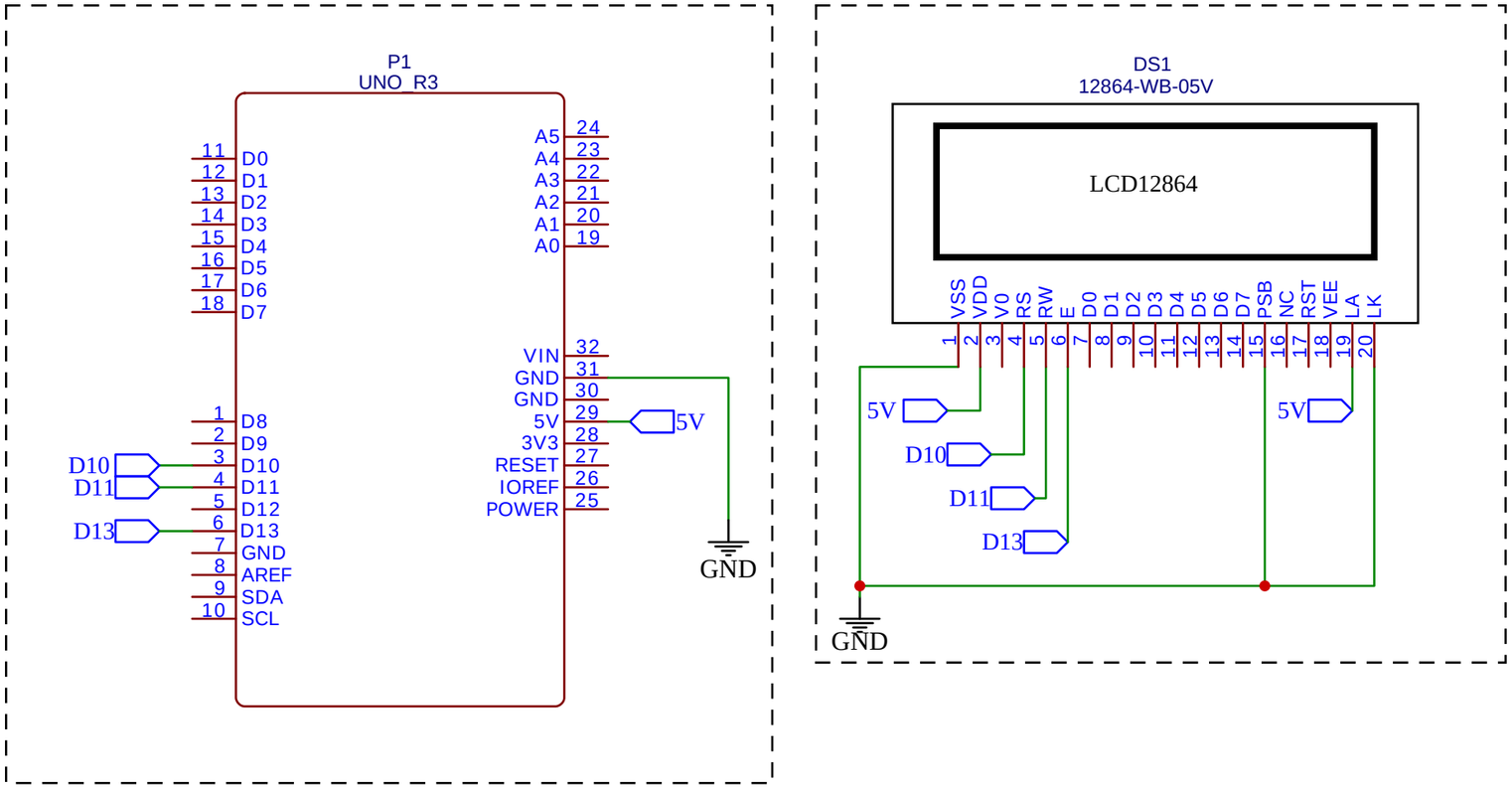

TITLE: 5V LCD12864 INTERFACED WITH UNO		REV: 1.0
EasyEDA	Company: Micro Robotics	Sheet: 1/1
	Date: 2021-11-11 Drawn By: Lucienne Swart	