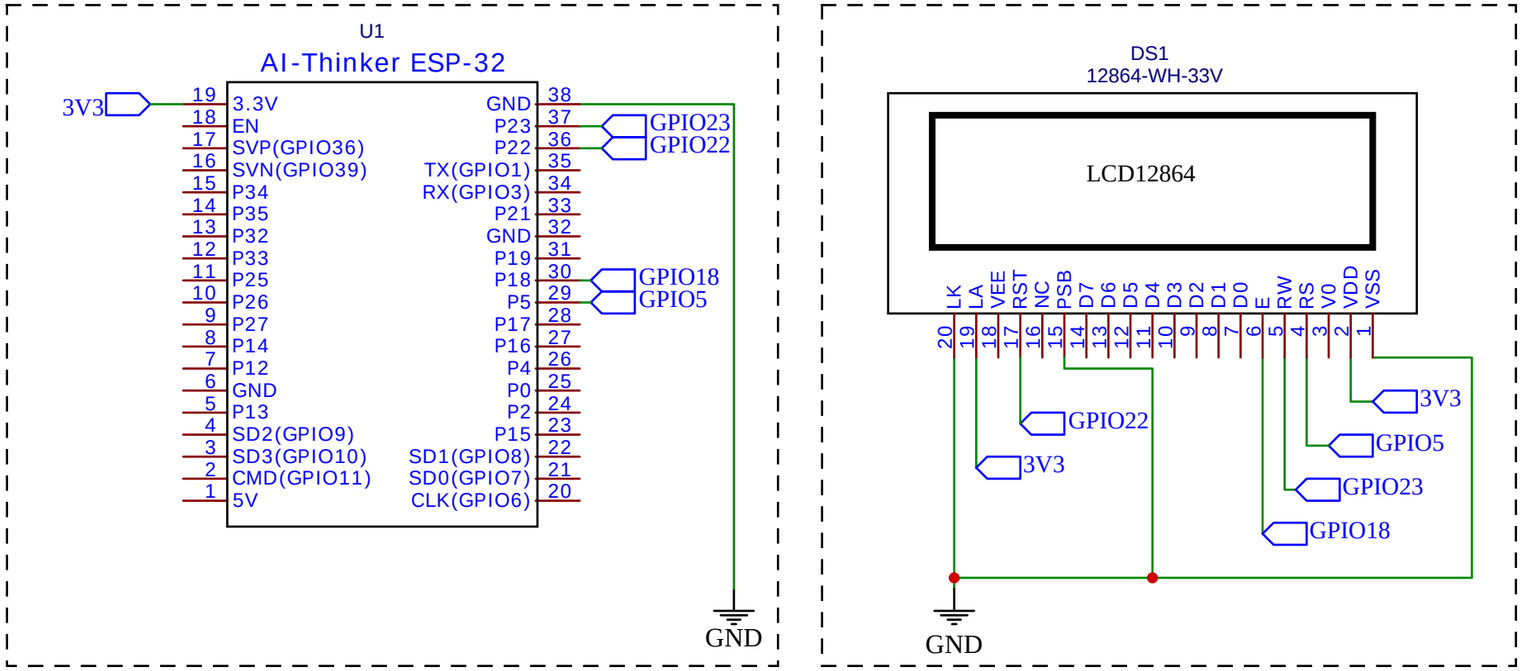

TITLE: 12864-WH-33V INTERFACED WITH ESP32		REV: 1.0
EasyEDA	Company: MICRO ROBOTICS	Sheet: 1/1
	Date: 2021-11-15 Drawn By: Lucienne Swart	