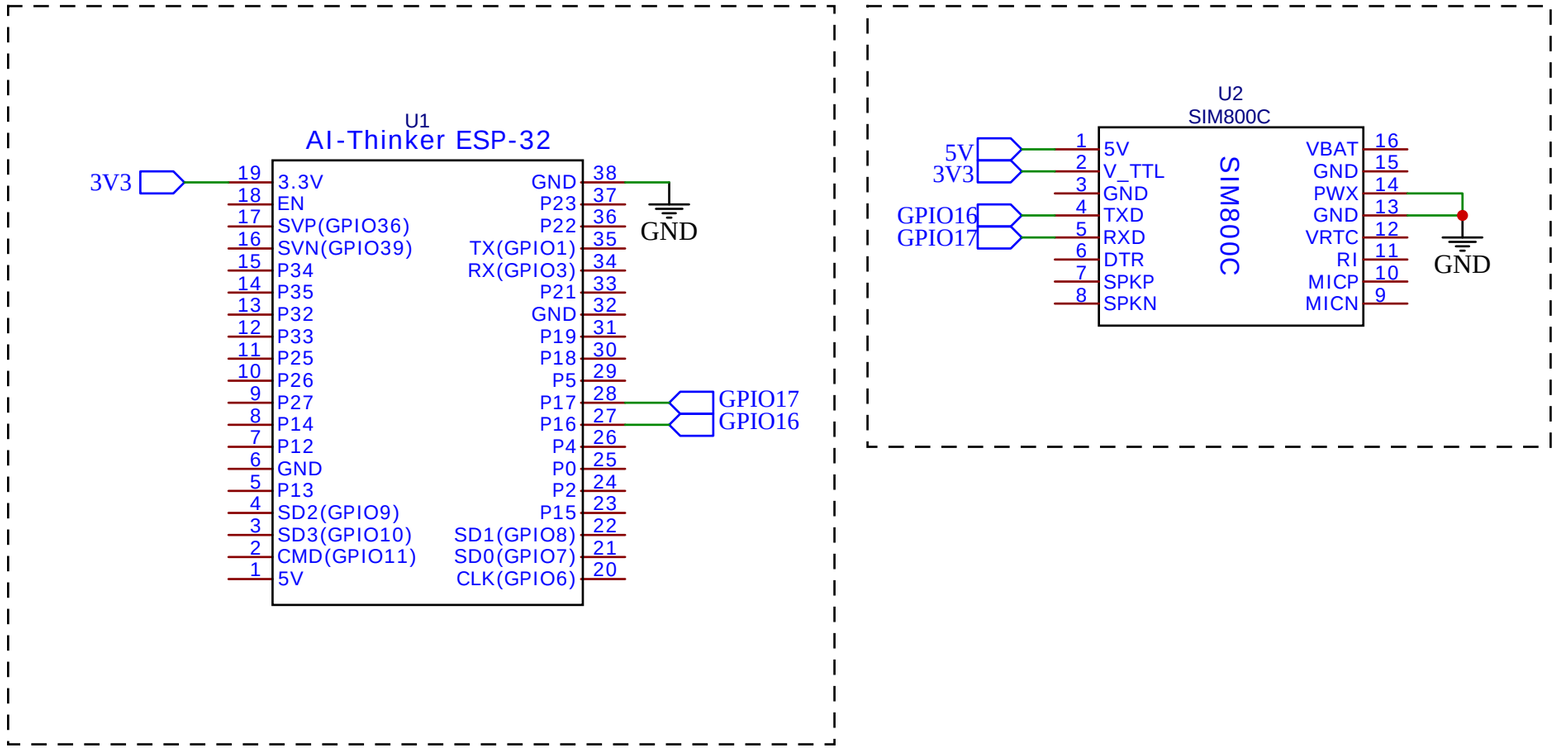

NOTES

1. 2A DRAW ON 5V, DO NOT USE ESP32 TO POWER
2. 100uF and 10uF tantalum capacitors over 5V and GND
3. For the module to start immediately when switched on, PWX is shorted to GND
4. V_TTL sets voltage of logic, 3V3 for ESP32 and 5V for Arduino UNO

TITLE: SIM800C INTERFACED WITH ESP32		REV: 1.0
EasyEDA	Company: MICRO ROBOTICS	Sheet: 1/1
	Date: 2021-11-16 Drawn By: LUCIENNE SWART	