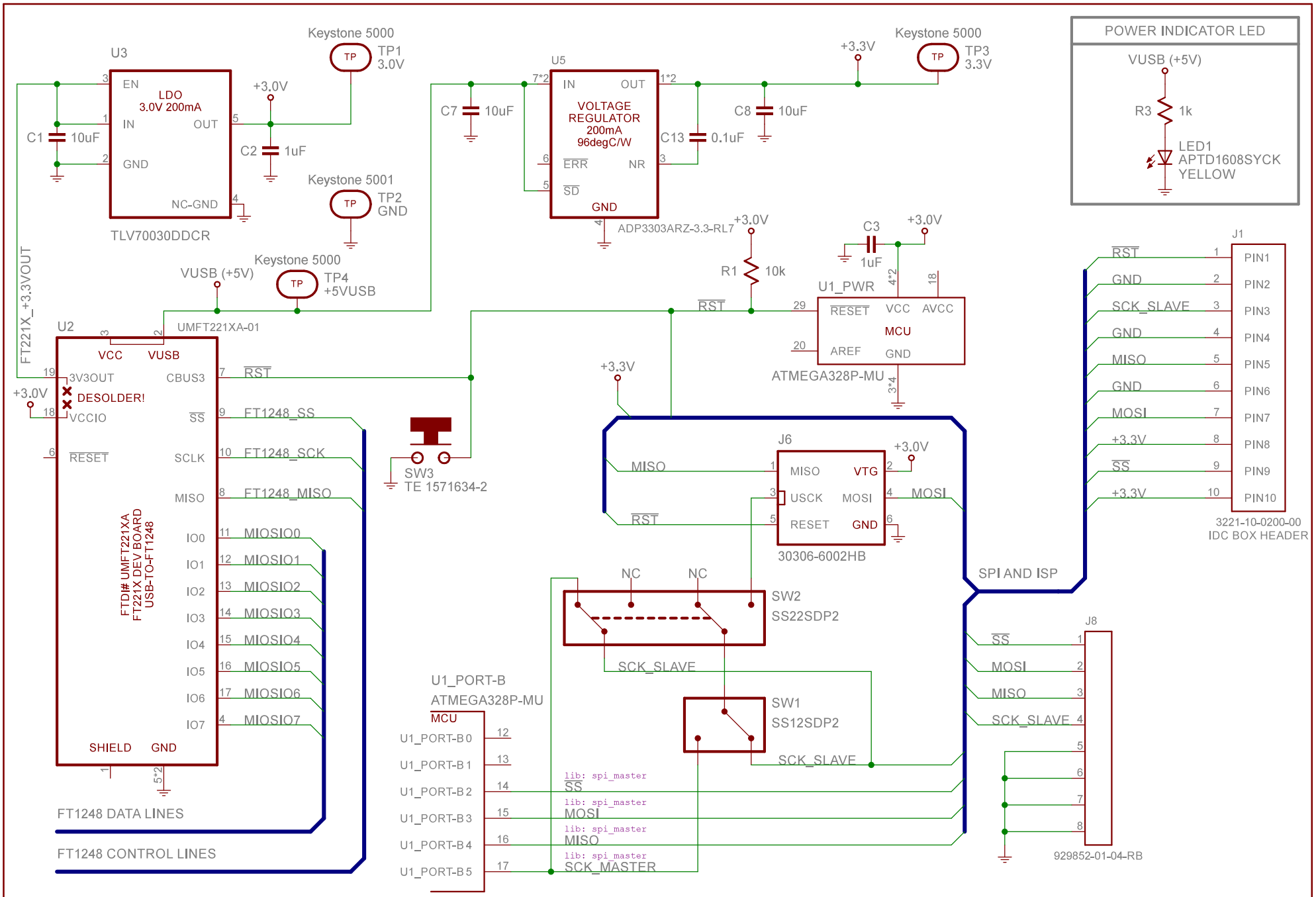

chromation

SPI SIMULANT AND ISP PROGRAMMING ADAPTER

ISP AND USB->FT1248->SPI

TITLE: 20160711_SPI_simulant

Date: 7/11/2016 3:06:47 PM

Sheet: 3/6

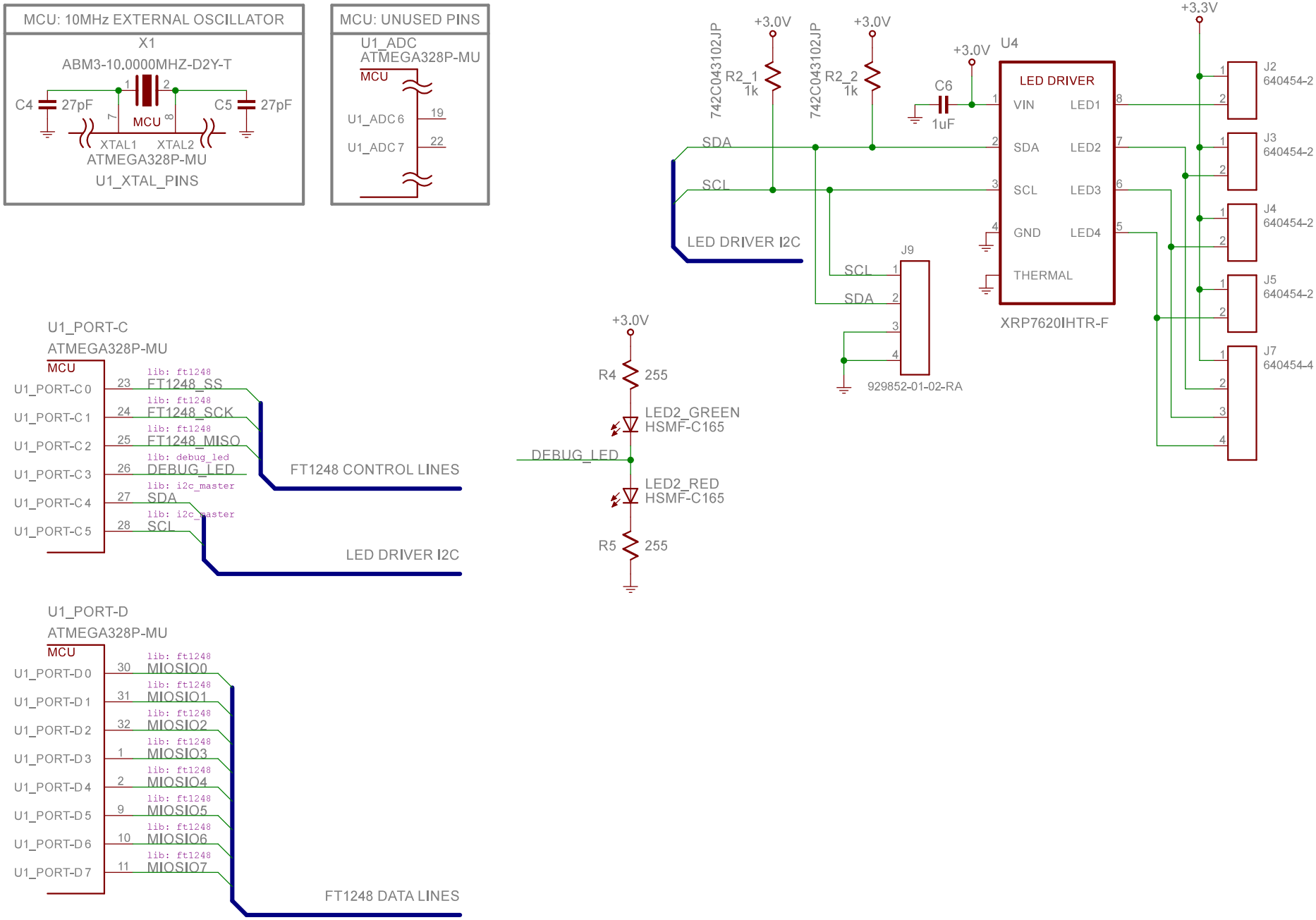

chromation

SPI SIMULANT AND ISP PROGRAMMING ADAPTER

FT1248->SPI AND LED I2C

TITLE: 20160711_SPI_simulant

Date: 7/11/2016 3:06:47 PM

Sheet: 4/6