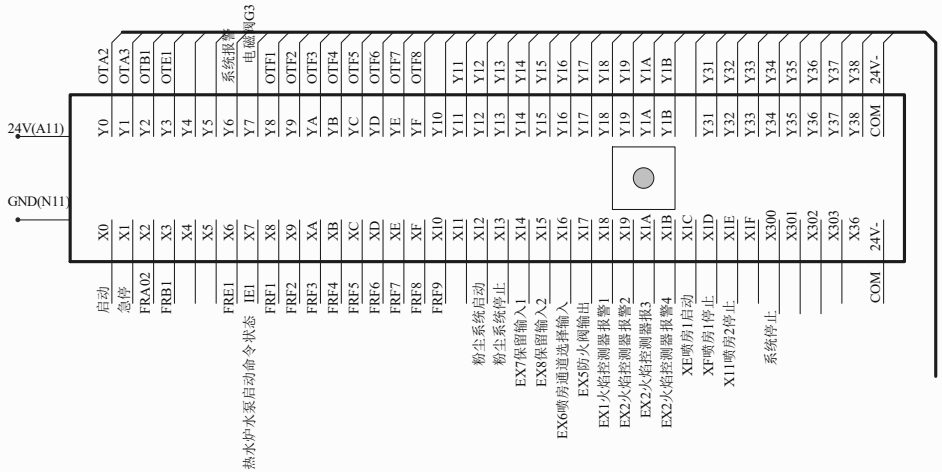

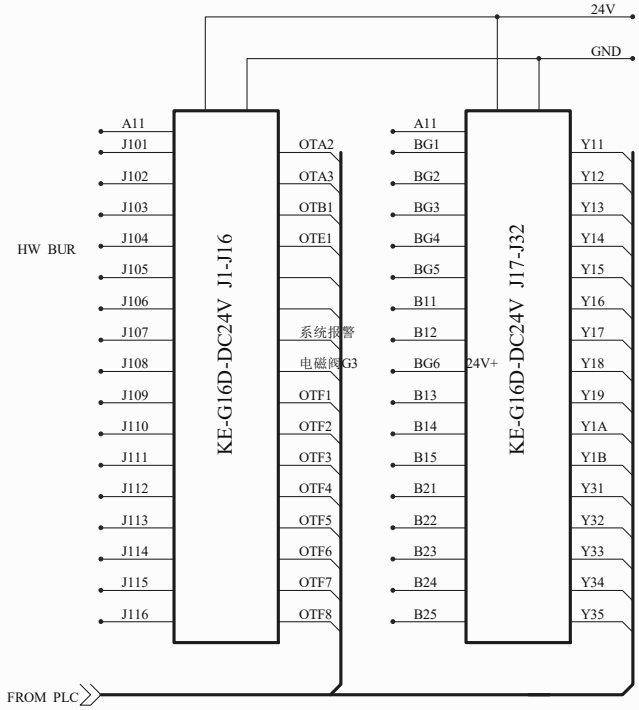

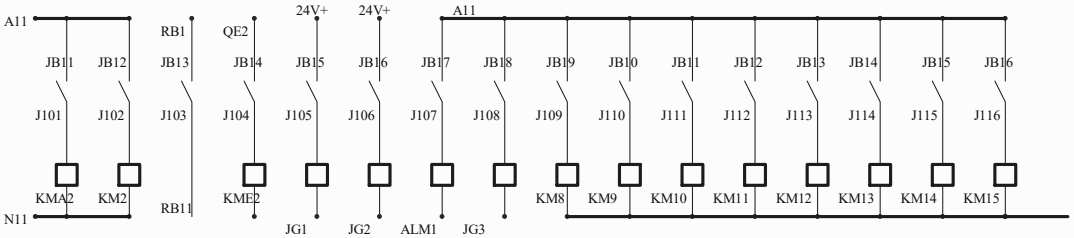

继电器板输出时，注意Y１８控制的继电器输出点BG６一侧接２４V＋，其余接A１１

Title		
Size C	Number	Revision
Date: 2019/11/16	Sheet of	
File: C:\worktop\fjl_20191023\plcunit.sch	Drawn By:	