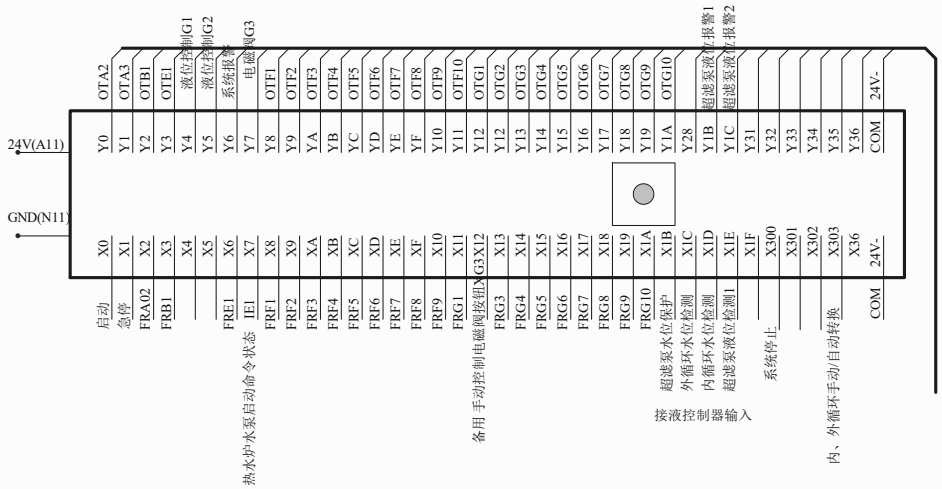

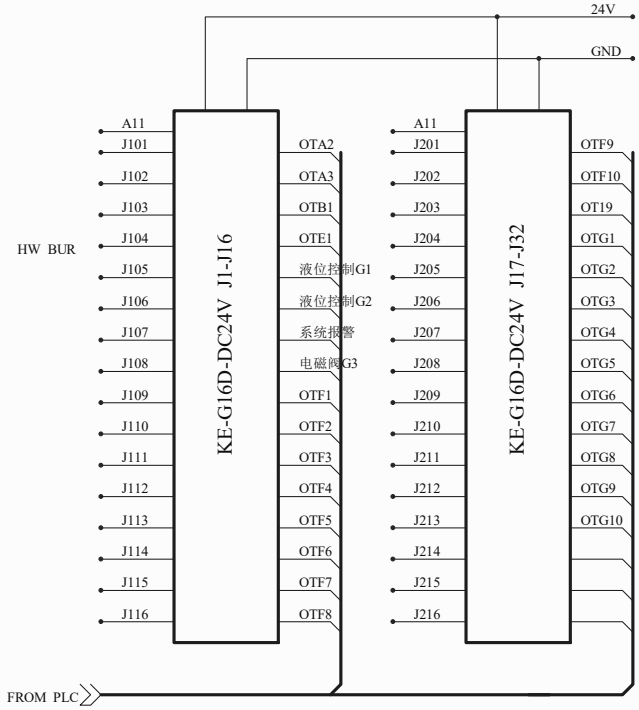

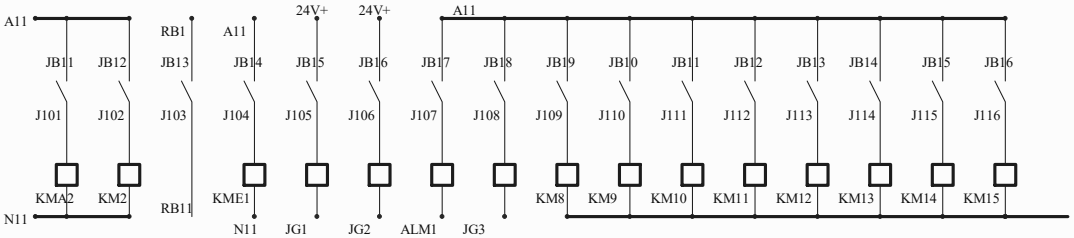

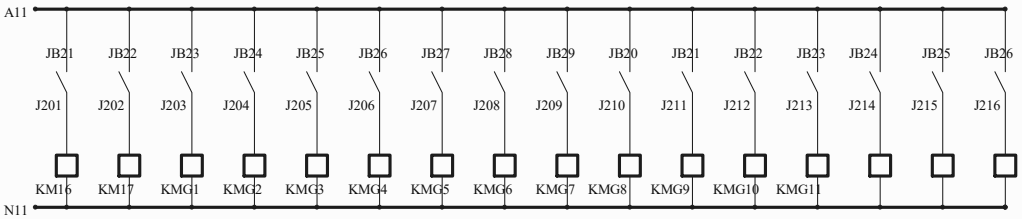

Title		
Size C	Number	Revision
Date: 2019/10/28		Sheet of
File: C:\worktop\fjl_sdlk\plcunit.sch		Drawn By: