DENON

Ver. 4

Please refer to the MODIFICATION NOTICE.

SERVICE MANUAL

MODEL	JP	E3	E2	E1	E1C	EA	E2R	EUT
RCD-N8			✓		✓			

NETWORK CD RECIEVER

- The part list can be found in a separate file.See the part list in Excel format.
- For purposes of improvement, specifications and design are subject to change without notice.
- Please use this service manual with referring to the operating instructions without fail.
- Some illustrations using in this service manual are slightly different from the actual set.

DENON

D&M Holdings Inc.

CONTENTS

ABOUT THIS MANUAL 3
What you can do with this manual 3
Using Adobe Reader (Windows version) 4
SAFETY PRECAUTIONS 6
NOTE FOR SCHEMATIC DIAGRAM 7
NOTE FOR PARTS LIST 7
INSTRUCTIONS FOR HANDLING SEMI-CONDUCTORS AND OPTICAL UNIT 8
1. Ground for Human Body 8
2. Ground for Workbench 8
SPECIFICATIONS 9
DIMENSION 10
CAUTION IN SERVICING 11
ABOUT REPLACE THE WLAN MODULE WITH A NEW ONE 11
Initializing NETWORK CD RECEIVER 12
Service tools 12
Note Handling and Replacement of the Laser pick-up 13
1. Protection of the LD 13
2. Precautions when handling the laser CD mechanism 13
3. Cautions on assembling and adjustment 13
4. Determining whether the laser pick-up is defective 13
DISASSEMBLY 14
1. TOP COVER 16
2. CD MECHA ASSY 17
3. FRONT PANEL ASSY 18
4. NETWORK PCB ASSY 20
5. SMPS PCB ASSY 21
6. MAIN PCB ASSY 23
SPECIAL MODE 25
Special mode setting 25
1. Initialization mode (Factory Reset) 26
2. Initialization mode (User Reset) 27
3. Version display 27
4. CD test mode 29
5. CD heat run mode 32
6. Product Mode 1 34
7. Product Mode 2 34
8. Protection history display mode 34
9. Update mode (by disc) 36
10. DPMS UP date mode 37
11. MAC Address rewrite mode 39
12. Access to development server mode 39
ABOUT REPLACE THE MICROPROCESSOR WITH A NEW ONE 40
VERSION UPGRADE PROCEDURE OF FIRMWARE 40
1. How to update by DISC 40
2. How to update by DPMS 43
TROUBLE SHOOTING 44
1. OLED dosen't light 44
2. No Sound, Noise generated 45
MEASURING METHOD AND WAVEFORMS 51
1. MAIN PCB : TEST POINT 51
2. WAVEFORMS 53
BLOCK DIAGRAM 55
POWER DIAGRAM 56
WIRING DIAGRAM 57
PRINTED WIRING BOARDS 58
SCHEMATIC DIAGRAMS (1/6) 61
MAIN CPU BLOCK 61
NETWORK CPU BLOCK 62
CD BLCK 63
AMP BLOCK 64
USB/CNT/DISPLAY BLOCK 65
SMPS 66
EXPLODED VIEW 67
EXPLODED VIEW OF CD MECHANISM UNIT 68
PARTS LIST OF EXPLODED VIEW 69
PARTS LIST OF CD MECHANISM UNIT 70
PACKING VIEW 71
PARTS LIST OF PACKING & ACCESSORIES 72
SEMICONDUCTORS 73
1. IC's 73
2. DISPLAY 95
PARTS LIST OF P.C.B. UNIT 96

ABOUT THIS MANUAL

Read the following information before using the service manual.

What you can do with this manual

Search for a Ref. No. (phrase) (Ctrl+Shift+F)

You can use the search function in Acrobat Reader to search for a Ref. No. in schematic diagrams, printed wiring board diagrams, block diagrams, and parts lists.

1.Press **Ctrl**+**Shift**+**F** on the keyboard.
- The Search window appears.

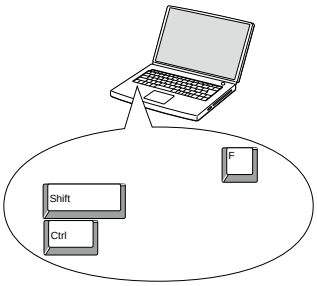

2.Enter the Ref. No. you want to search for in the Search window, and then click the **Search** button.
- A list of search results appears.

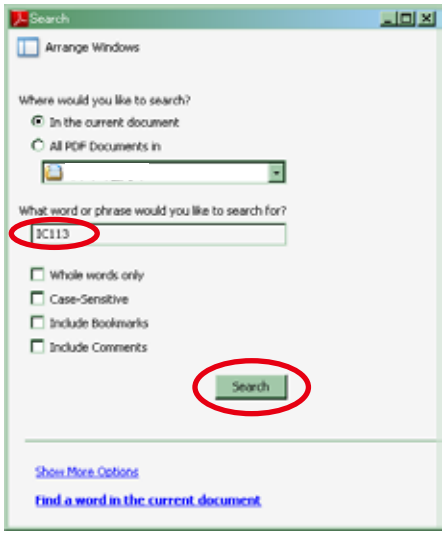

3.Click an item on the list.
- The screen jumps to the page for that item, and the search phrase is displayed.

Jump to the target of a schematic diagram connector

Click the Ref. No. of the target connector in the red box around a schematic diagram connector.
- The screen jumps to the target connector.

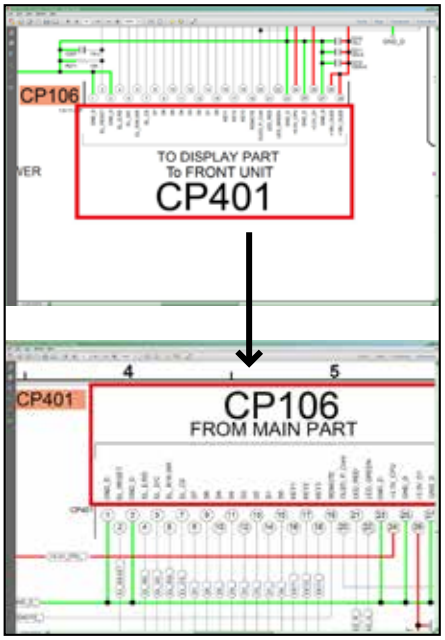

- Page magnification stays the same as before the jump.

Using Adobe Reader (Windows version)

Add notes to this data (Sign)

The Sign function lets you add notes to the data in this manual.
Save the file once you have finished adding notes.

[Example using Adobe Reader X]
On the "**View**" menu, click "**Sign**".
- The Sign pane appears.

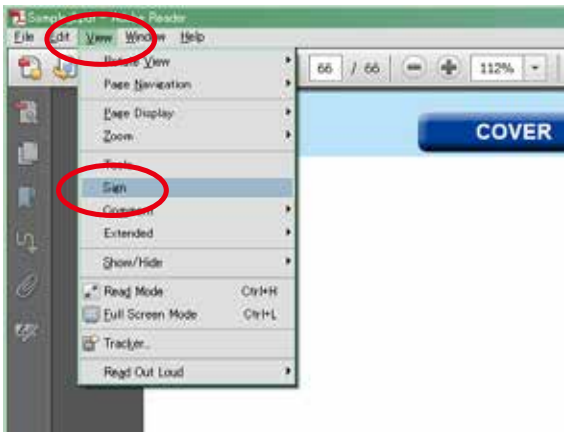

[Example using Adobe Reader 9]
On the "**Document**" menu, click "**Sign**".

Magnify schematic / printed wiring board diagrams - 1 (Ctrl+Space, mouse operation)

[Example using Adobe Reader 9,X]
Press **Ctrl**+**Space** on the keyboard and drag the mouse to select the area you want to view.
- The selected area is magnified.

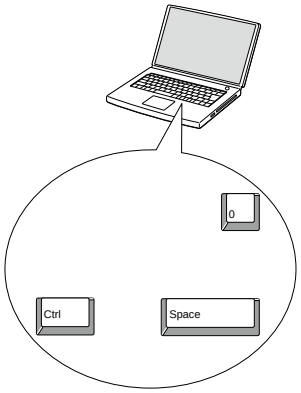

- When you want to move the area shown, hold down **Space** and drag the mouse.
- When you want to show a full page view, press **Ctrl**+**0** on the keyboard.

Print a magnified part of the manual

The Properties dialog box and functions will vary depending on your printer.

1. Drag the mouse to magnify the part you want to print.
2. On the "**File**" menu, click "**Print**".
3. Configure the following settings in the Print dialog box.

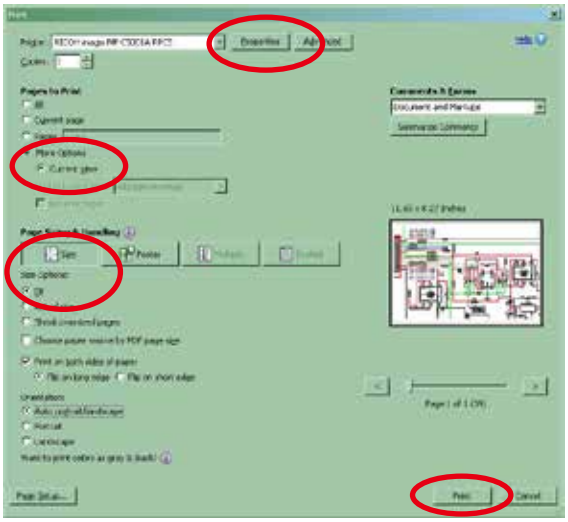

- **Properties**
  Click this button and check that the printer is set to a suitable paper size.
- **Page to print**
  Select the following checkbox.
  "**More Options**" : "**Current View**"
- **Page Sizing & Handling**
  Select the following checkbox.
  "**Size**" / "**Size Options**" : "**Fit**"

4. Click the **Print** button to start printing.

Magnify schematic / printed wiring board diagrams - 2
(Pan & Zoom function)

The Pan & Zoom function lets you see which part of a magnified diagram is being shown in a separate window.

[Example using Adobe Reader X]
On the "**View**" menu, point to "**Zoom**", and then click "**Pan & Zoom**".

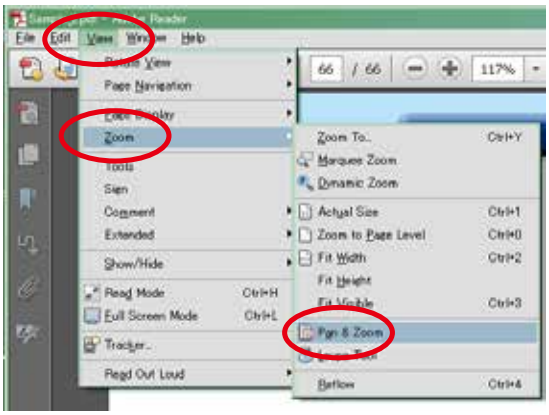

- The Pan & Zoom window appears on the screen.

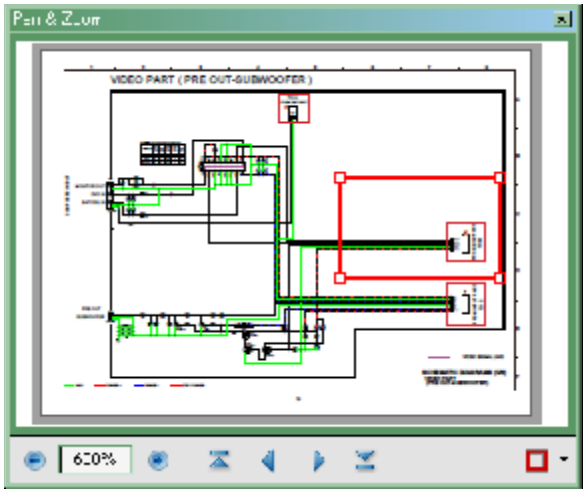

[Example using Adobe Reader 9]
On the "**Tools**" menu, point to "**Select & Zoom**", and then click "**Pan & Zoom Window**".

Magnify schematic / printed wiring board diagrams - 3
(Loupe Tool function)

The Loupe Tool function lets you magnify a specific part of a diagram in a separate window.

[Example using Adobe Reader X]
On the "**View**" menu, point to "**Zoom**", and then click "**Loupe Tool**".

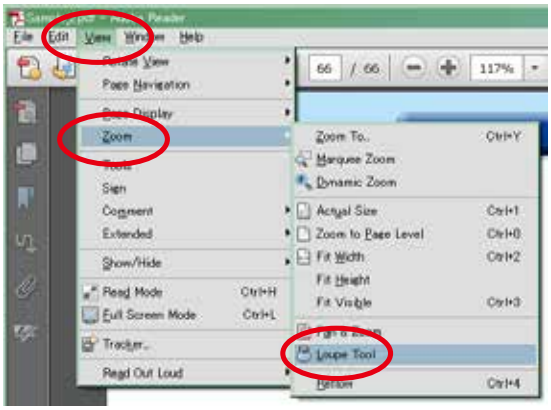

- The Loupe Tool window appears on the screen.

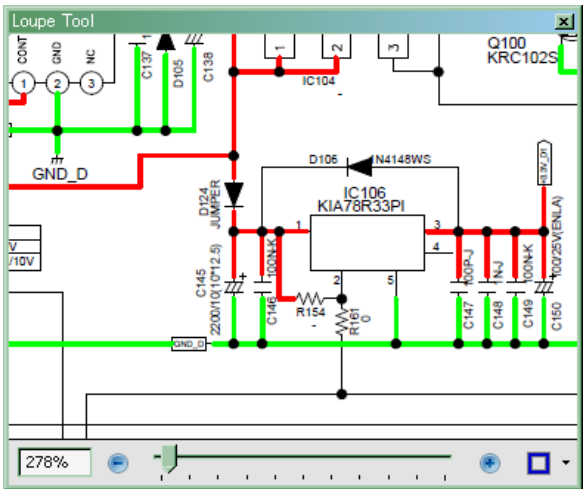

[Example using Adobe Reader 9]
On the "**Tools**" menu, point to "**Select & Zoom**", and then click "**Loupe Tool Window**".

SAFETY PRECAUTIONS

The following items should be checked for continued protection of the customer and the service technician.

LEAKAGE CURRENT CHECK

Before returning the set to the customer, be sure to carry out either (1) a leakage current check or (2) a line to chassis resistance check. If the leakage current exceeds 0.5 milliamps, or if the resistance from chassis to either side of the power cord is less than 460 kohms, the set is defective.
Be sure to test for leakage current with the AC plug in both polarities, in addition, when the set's power is in each state (on, off and standby mode), if applicable.

CAUTION Please heed the following cautions and instructions during servicing and inspection.

Heed the cautions!

Cautions which are delicate in particular for servicing are labeled on the cabinets, the parts and the chassis, etc. Be sure to heed these cautions and the cautions described in the handling instructions.

Cautions concerning electric shock!

(1) An AC voltage is impressed on this set, so if you touch internal metal parts when the set is energized, you may get an electric shock. Avoid getting an electric shock, by using an isolating transformer and wearing gloves when servicing while the set is energized, or by unplugging the power cord when replacing parts, for example.

(2) There are high voltage parts inside. Handle with extra care when the set is energized.

Caution concerning disassembly and assembly!

Through great care is taken when parts were manufactured from sheet metal, there may be burrs on the edges of parts. The burrs could cause injury if fingers are moved across them in some rare cases. Wear gloves to protect your hands.

Use only designated parts!

The set's parts have specific safety properties (fire resistance, voltage resistance, etc.). Be sure to use parts which have the same properties for replacement. The burrs have the same properties. In particular, for the important safety parts that are indicated by the ⚠ mark on schematic diagrams and parts lists, be sure to use the designated parts.

Be sure to mount parts and arrange the wires as they were originally placed!

For safety seasons, some parts use tapes, tubes or other insulating materials, and some parts are mounted away from the surface of printed circuit boards.
Care is also taken with the positions of the wires by arranging them and using clamps to keep them away from heating and high voltage parts, so be sure to set everything back as it was originally placed.

Make a safety check after servicing!

Check that all screws, parts and wires removed or disconnected when servicing have been put back in their original positions, check that no serviced parts have deteriorate the area around. Then make an insulation check on the external metal connectors and between the blades of the power plug, and otherwise check that safety is ensured.

(Insulation check procedure)
Unplug the power cord from the power outlet, disconnect the antenna, plugs, etc., and on the power. Using a 500V insulation resistance tester, check that the insulation resistance value between the inplug and the externally exposed metal parts (antenna terminal, headphones terminal, input terminal, etc.) is 1MΩ or greater. If it is less, the set must be inspected and repaired.

CAUTION Concerning important safety parts

Many of the electric and the structural parts used in the set have special safety properties. In most cases these properties are difficult to distinguish by sight, and the use of replacement parts with higher ratings (rated power and withstand voltage) does not necessarily guarantee that safety performance will be preserved. Parts with safety properties are indicated as shown below on the wiring diagrams and the parts list in this service manual. Be sure to replace them with the parts which have the designated part number.

(1) Schematic diagrams.....Indicated by the ⚠ mark.
(2) Parts lists.....Indicated by the ⚠ mark.
The use of parts other than the designated parts could cause electric shocks, fires or other dangerous situations.

NOTE FOR SCHEMATIC DIAGRAM

WARNING:
Parts indicated by the ⚠ mark have critical characteristics. Use ONLY replacement parts recommended by the manufacturer.
CAUTION:
Before returning the set to the customer, be sure to carry out either (1) a leakage current check or (2) a line to chassis resistance check. If the leakage current exceeds 0.5 milliamps, or if the resistance from chassis to either side of the power cord is less than 460 kohms, the set is defective.
WARNING:
DO NOT return the set to the customer unless the problem is identified and remedied.
NOTICE:
ALL RESISTANCE VALUES IN OHM. k=1,000 OHM / M=1,000,000 OHM
ALL CAPACITANCE VALUES ARE EXPRESSED IN MICRO FARAD, UNLESS OTHERWISE INDICATED. P INDICATES MICRO-MICRO FARAD. EACH VOLTAGE AND CURRENT ARE MEASURED AT NO SIGNAL INPUT CONDITION. CIRCUIT AND PARTS ARE SUBJECT TO CHANGE WITHOUT PRIOR NOTICE.

NOTE FOR PARTS LIST

1. Parts indicated by "nsp" on this table cannot be supplied.
2. When ordering a part, make a clear distinction between "1" and "I" (i) to avoid mis-supplying.
3. A part ordered without specifying its part number can not be supplied.
4. Part indicated by "★" mark is not illustrated in the exploded view.
5. General-purpose Carbon Film Resistor in the P.W.Board parts list. (Refer to the Schematic Diagram for those parts.)
6. General-purpose Carbon Chip Resistors are not included are not included in the P.W.Board parts list.
   (Refer to the Schematic Diagram for those parts.)

WARNING: Parts indicated by the ⚠ mark have critical characteristics. Use ONLY replacement parts recommended by the manufacturer.

INSTRUCTIONS FOR HANDLING SEMI-CONDUCTORS AND OPTICAL UNIT

Electrostatic breakdown of the semi-conductors or optical pickup may occur due to a potential difference caused by electrostatic charge during unpacking or repair work.

1. Ground for Human Body

Be sure to wear a grounding band (1 MΩ) that is properly grounded to remove any static electricity that may be charged on the body.

2. Ground for Workbench

Be sure to place a conductive sheet or copper plate with proper grounding (1 MΩ) on the workbench or other surface, where the semi-conductors are to be placed. Because the static electricity charge on clothing will not escape through the body grounding band, be careful to avoid contacting semi-conductors with your clothing

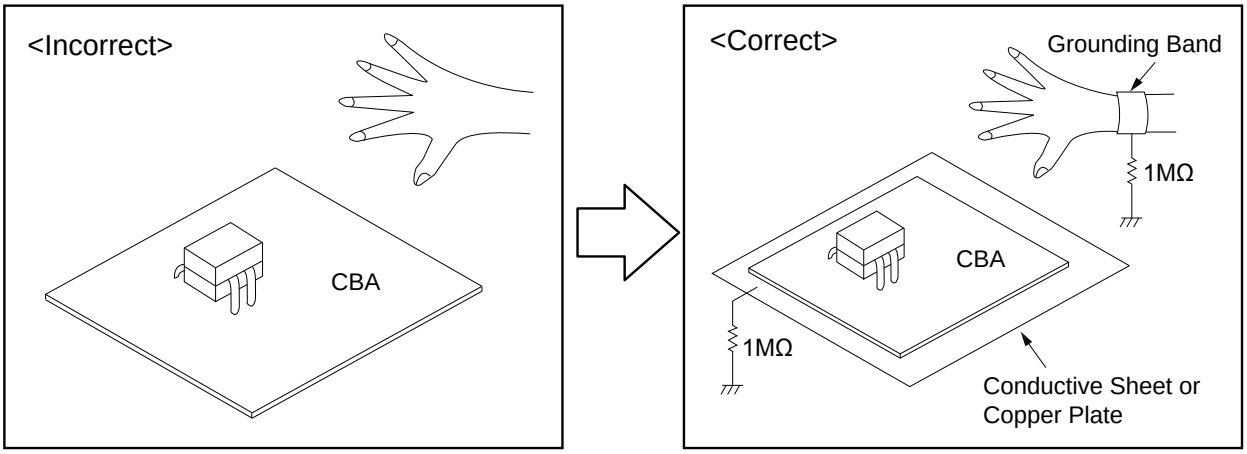

SPECIFICATIONS

❑ CD player

- **Audio performance**

S/N ratio (1 kHz)	100 dB
Dynamic range (1 kHz)	100 dB
Total harmonic distortion (1 kHz)	0.01 %

❑ Audio AMP

Rated output	2-channel driving 65 W + 65 W (4 Ω/ohms, 1 kHz, T.H.D. 0.7 %)
Dynamic power	80 W + 80 W (4 Ω/ohms)
Output terminals:	Speaker 4 – 16 Ω Suited for headphones/ stereo headphones
Input sensitivity/impedance	AUX: 200 mV/22 kΩ
Total harmonic distortion (1 kHz, 5 W, 8 Ω)	AUX: 0.05 %
S/N ratio (10 W, 8 Ω, IHF-A)	AUX: 86 dB
Tone control:	SDB : 100 Hz +8 dB BASS : 100 Hz ± 10 dB TREBLE : 10 kHz ± 10 dB
Frequency response:	10 Hz ~ 40 kHz (+0.5 dB, –3 dB) (SOURCE DIRECT: ON)

❑ Tuner

Reception frequency range:	FM : 87.50 MHz – 108.00 MHz
Reception sensitivity:	FM : 1.2 μV / 75 Ω
FM channel separation:	30 dB (1 kHz)
FM S/N ratio:	Monaural : 74 dB Stereo : 70 dB
FM harmonic distortion:	Monaural : 0.3 % Stereo : 0.4 %

❑ Wireless LAN

Network type (wireless LAN standards):

Conforming to IEEE 802.11b
Conforming to IEEE 802.11g
(Conforming to Wi-Fi®)∗

Transfer rate:

DS-SS: 11 / 5.5 / 1 Mbps (Automatic switching)
OFDM: 54 / 48 / 36 / 24 / 18 / 12 / 9 / 6 Mbps (Automatic switching)

Security:

SSID (Network name)
WEP key (network key) (64/128 bits)
WPA-PSK (TKIP/AES)
WPA2-PSK (TKIP/AES)

Used frequency range:

2,412 MHz – 2,472 MHz

No. of channels:

Conforming to IEEE 802.11b : 13ch (DS-SS) (Of which 1 channel used)
Conforming to IEEE 802.11g : 13ch (OFDM) (Of which 1 channel used)

❑ Clock/Alarm

Clock type:

Power line frequency synchronized method
(Within ±60 seconds per month)

Alarm:

Everyday alarm / Once alarm : One system each
Sleep timer : Max. 90 minutes

❑ Power supply

Power supply voltage/frequency	AC 230 V, 50/60 Hz
Power consumption	55 W
Power consumption in standby mode	0.3 W
Power consumption in "Network Control" – "On" mode:	3 W

∗ Wi-Fi® conformity indicates tested and proven interoperability by the "Wi-Fi Alliance", a group certifying interoperability among wireless LAN devices.

- For purposes of improvement, specifications and design are subject to change without notice.

DIMENSION

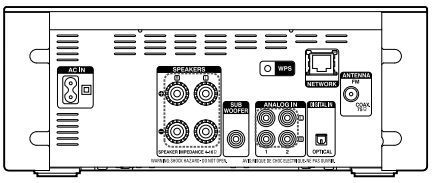
AC IN
SPEAKERS
WPS
NETWORK
ANTENNA
FM
COAXIAL
75Ω
SUB
WOOFER
ANALOG IN
1
2
AT IN IN
OPTICAL

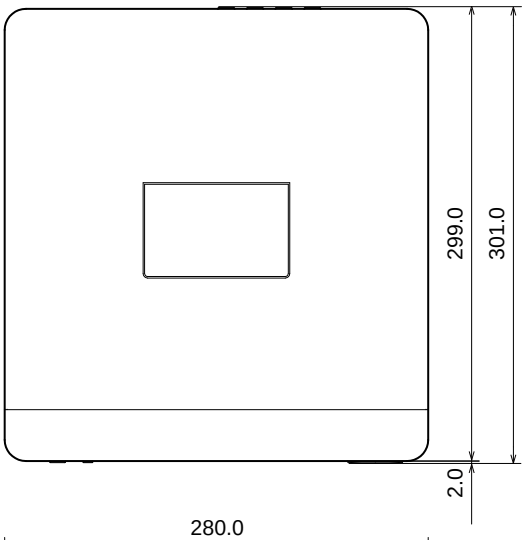
299.0
301.0
2.0

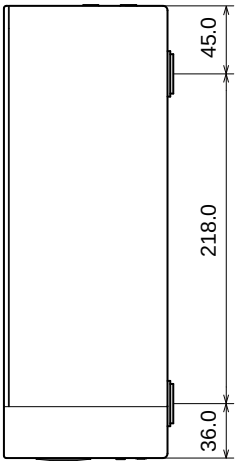
45.0
218.0
36.0

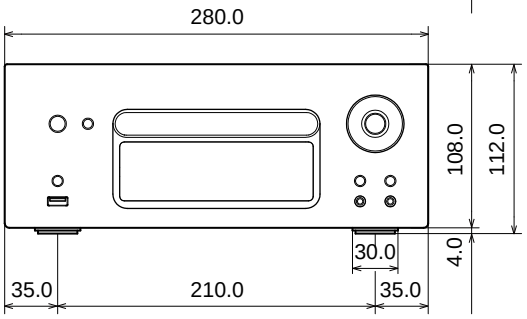
280.0
108.0
112.0
4.0
30.0
35.0
210.0
35.0

CAUTION IN SERVICING

ABOUT REPLACE THE WLAN MODULE WITH A NEW ONE

When replaced of this Unit WLAN MODULE (E2 : 963189100410D) (JP : 963189100420D),
confirm contents of the following.

(1) Replace the WLAN MODULE with the (E2 : 963189100410D)(JP : 963189100420D)(MAC Address was written).
(2) The firmware is updated by DPMS. Refer to [VERSION UPGRADE PROCEDURE OF FIRMWARE "2. How to update by DPMS"] (page 41) for the details of the Version up.
(3) MAC Address Label pasted to Bottom is pasted to Mac Address Label (GEN8341; MAC ADDRESS SUB ASSY) of exchanged WLAN MODULE and it substitutes it.

Initializing NETWORK CD RECEIVER

NETWORK RECEIVER initialization should be performed when the µ-com, peripheral parts of µ-com, and Digital PCB. are replaced.

1. Turn off the power using ON/STANDBY button, unplug the power cord.
2. Plug the power cord into a power outlet while pressing VOLUME▲ and CURSOR▽ button simultaneously. (Factory Reset)
3. Turn off the power using ON/STANDBY button, unplug the power cord.
4. Plug the power cord into a power outlet while pressing VOLUME▲ and ▼ button simultaneously. (User Reset)

Note: • All user settings will be lost and this factory setting will be recovered when this initialization mode. So make sure to memorize your setting for restoring after the initialization.

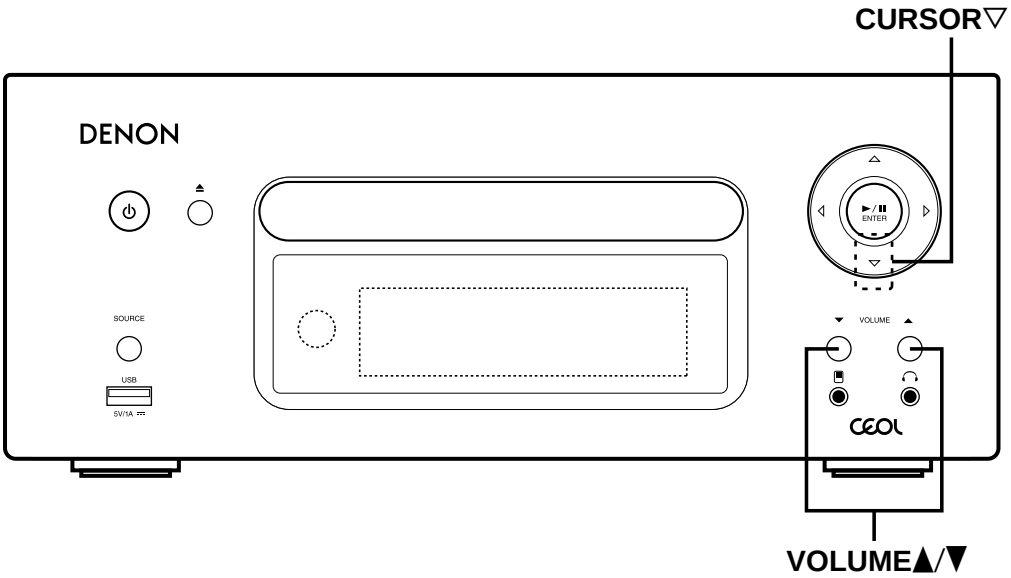

Service tools

Measuring Disc: CD/TCD-784
CD-R/TCD-R082W
CD-RW/TCD-W082W

∗ Refer to "MEASURING METHOD AND WAVEFORMS".

NOTE HANDLING AND REPLACEMENT OF THE LASER PICK-UP

1. Protection of the LD

Short a part of the LD circuit by soldering. After connection to a circuit, remove the short solder.

2. Precautions when handling the laser CD mechanism

- Handle the laser pick-up so that it is not exposed to dust.
- Do not leave the laser pick-up bare. Be sure to cover it.
- If dust adheres on lens of the pick-up, blow it off with a blower brush.
- Do not shock the laser pick-up.
- Do not watch the light of the laser pick-up.

3. Cautions on assembling and adjustment

- Be sure that to the bench, jig, head of soldering iron (with ceramic) and measuring instruments are well grounded.
- Workers who handle the laser pick-up must be grounded.
- The finished mechanism (prior to anchoring in the set) should be protected against static electricity and dust. The mechanism must be stored that damaging outside forces are not received.
- When carrying the finished mechanism, hold it by the chassis body
- For proper operation, storage and operating environment should not contain corrosive gases. For example H2S, SO2, NO2, CI2 etc. In addition storage environment should not have materials that emit corrosive gases especially from silicic, cyanic, formalin and phenol group. I the mechanism or the set, existence of corrosive gases may cause no rotation in motor.

4. Determining whether the laser pick-up is defective

- Check the Iop(Laser drive current). Check Iop in "SPECIAL MODE". (Refer to 23 page.)
- If the present Iop (current) value becomes more than 50mA, replace the Traverse unit with a new one.
- No mechanical adjustment is necessary after the replacement.

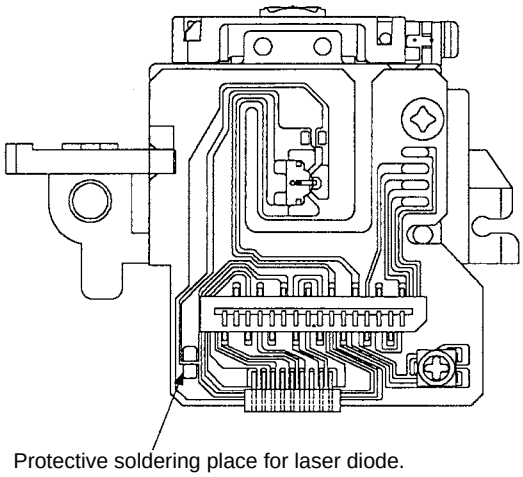

DISASSEMBLY

- Disassemble in order of the arrow in the following figure.
- In the case of the re-assembling, assemble it in order of the reverse of the following flow.
- In the case of the reassembling, observe "Caution concerning disassembly and assembly!".
- If wire bundles are untied or moved to perform adjustment or replace parts etc., be sure to rearrange them neatly as they were originally bundled or placed afterward.
  Otherwise, incorrect arrangement can be a cause of noise generation.

CAUTION:
Through great care is taken when manufacturing parts from sheet metal, there may in some rare cases be burrs on the edges of top cover which could cause injury if fingers are moved across them. Use gloves to protect your hands.

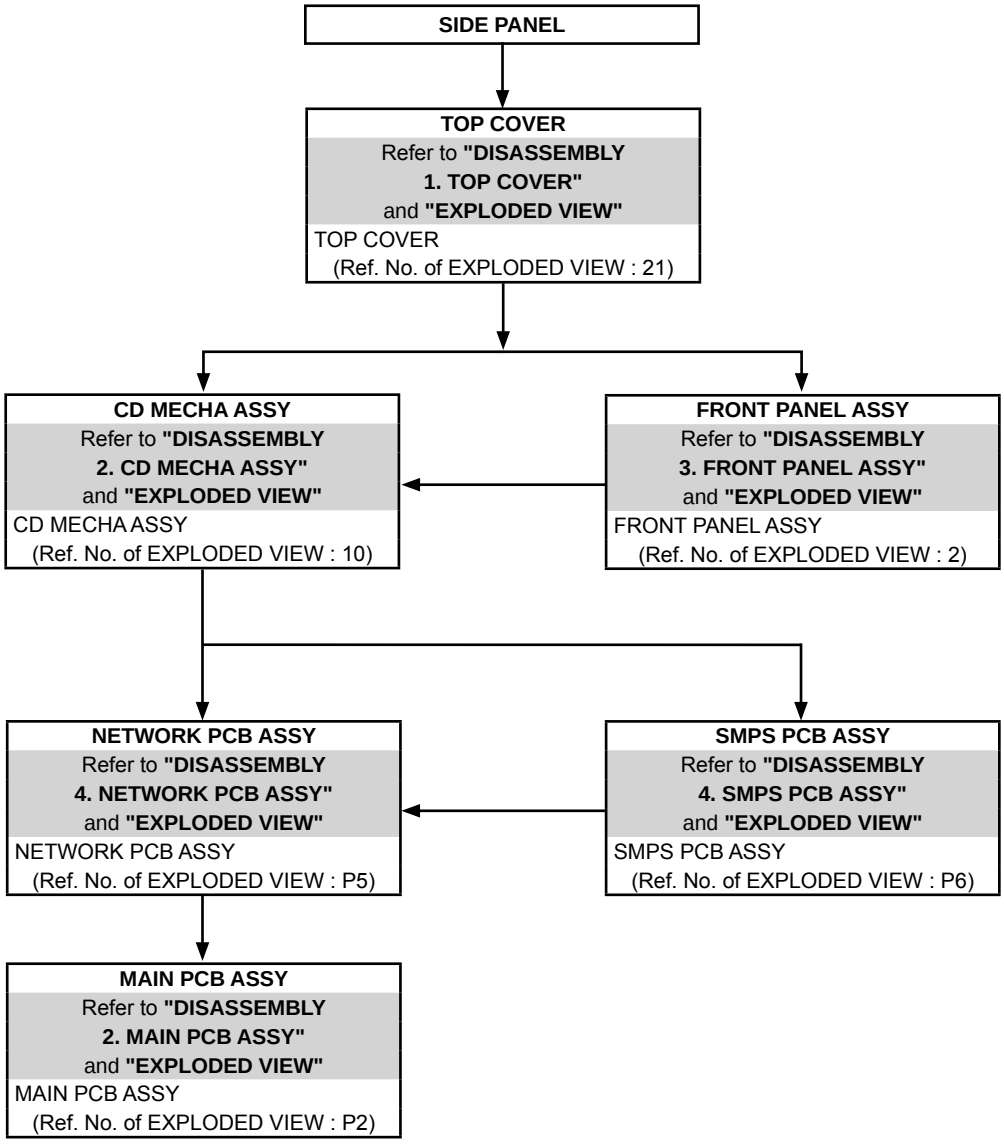

About the photos used for "descriptions of the DISASSEMBLY" section

- The shooting direction of each photograph used herein is indicated on the left side of the respective photograph as "Shooting direction: ***". (*** : A,B,C,D)
- Refer to the diagram below about the shooting direction of each photograph.
- Photographs with no shooting direction indicated were taken from the top of the set.
- The photograph is RCD-N8(E2) model.

The viewpoint of each photograph (Shooting direction)

［View from the top］

1. TOP COVER

Proceeding : SIDE PANEL → TOP COVER

(1) Remove the screws.

Shooting direction: C

Shooting direction: D

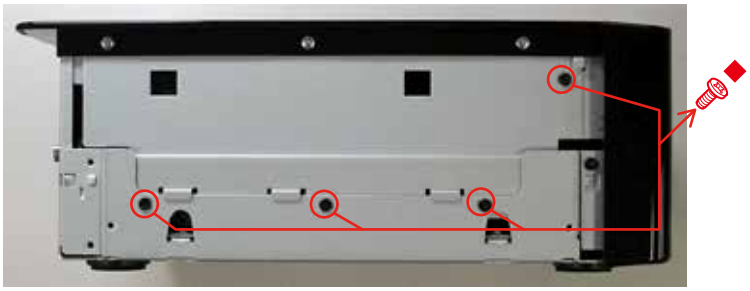

(2) Remove the screws.

Shooting direction: A

(3) Remove the connector wire.

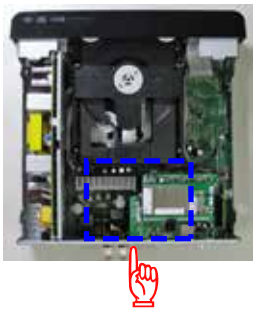

Shooting direction: A

2. CD MECHA ASSY

Proceeding : SIDE PANEL → TOP COVER → CD MECHA ASSY

(1) Remove the screws.

(2) Laser short-circuit in Pick-up of CD MECHANISM ASS'Y, then disconnect the connector wires and FFC cable. Be sure to wear a grounding band.

Shooting direction: A

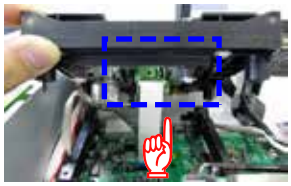

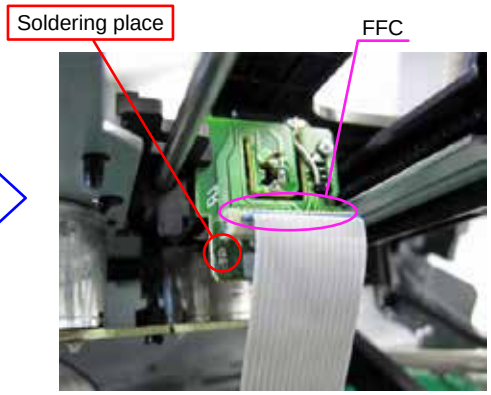

(3) Remove the connector wire.

Shooting direction: C

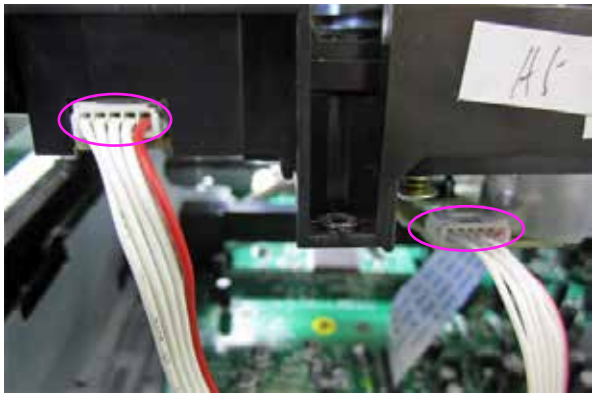

3. FRONT PANEL ASSY

Proceeding : SIDE PANEL → TOP COVER → FRONT PANEL ASSY

(1) Remove the screws.

View from the bottom

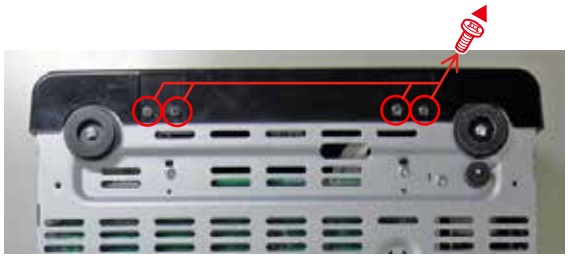

(2) Cut the clamp bands, remove the connector wire and FFC.

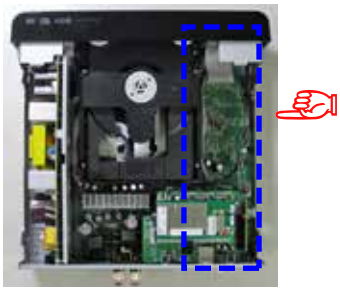

Shooting direction: D

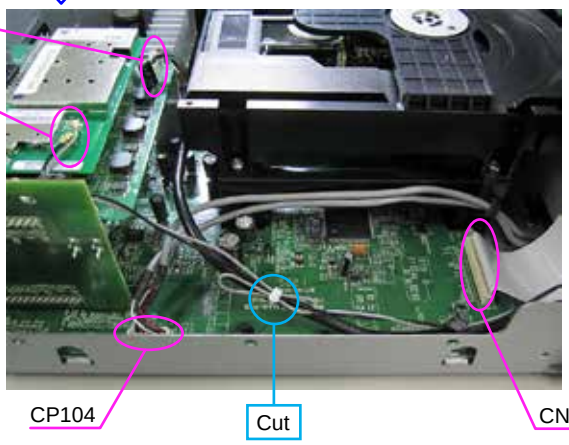

(3) Remove the screws.

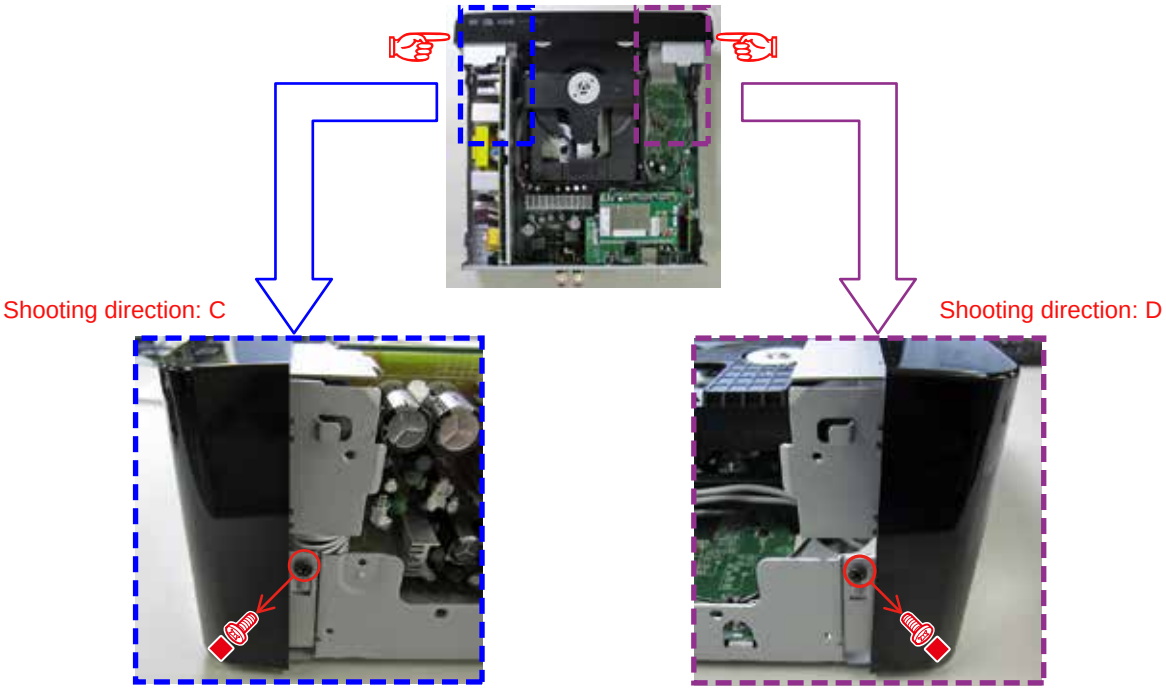

Please refer to "EXPLODED VIEW" for the disassembly method of FRONT PANEL ASSY.

4. NETWORK PCB ASSY

Proceeding : SIDE PANEL → TOP COVER → CD MECHA ASSY → FRONT PANEL ASSY → NETWORK PCB ASSY

(1) Remove the screws.

Shooting direction: A

(2) Remove the screws.

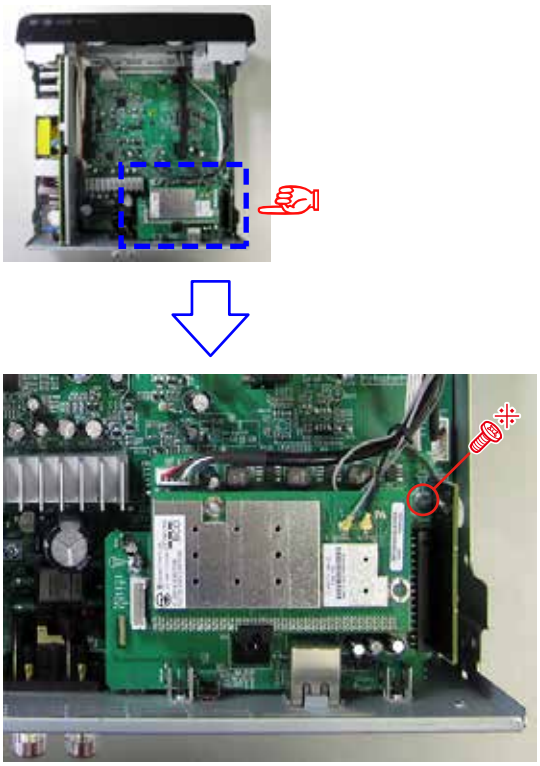

5. SMPS PCB ASSY

Proceeding : SIDE PANEL → TOP COVER → CD MECHA ASSY → FRONT PANEL ASSY → SMPC PCB ASSY

(1) Remove the screws.

View from the bottom

(2) Remove the screws.

Shooting direction: C

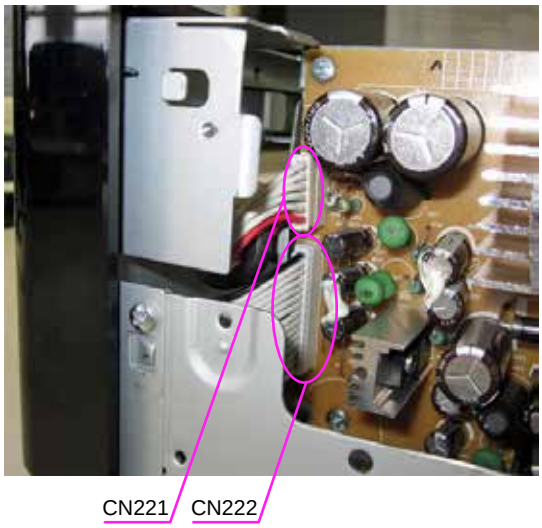

(3) Remove the screws.

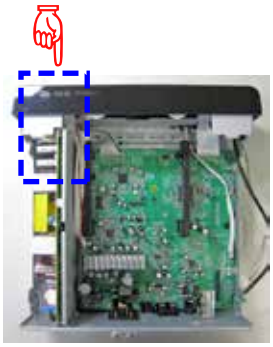

Shooting direction: C

(4) Remove the screws.

Shooting direction: A

6. MAIN PCB ASSY

Proceeding : SIDE PANEL → TOP COVER → CD MECHA ASSY → FRONT PANEL ASSY → NETWORK PCB ASSY → MAIN PCB ASSY

(1) Remove the screws.

Shooting direction: A

(2) Remove the screws.

View from the bottom

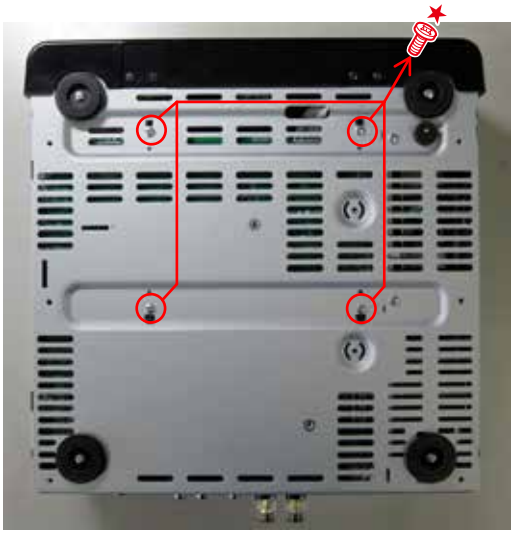

(3) Remove the SUPPORT MECHA.

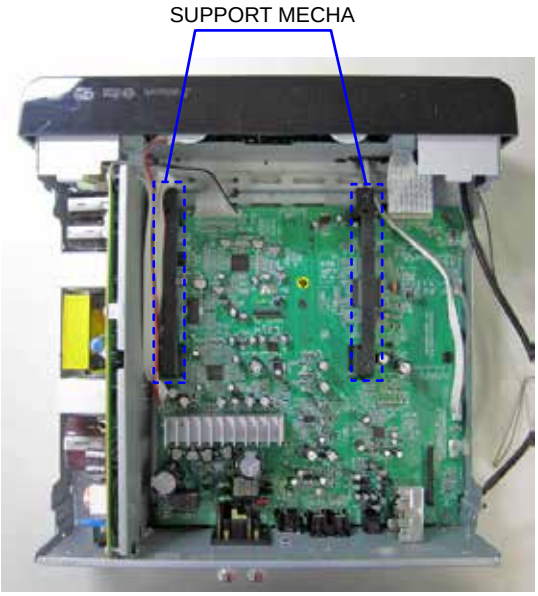

(4) Remove the screws, remove the connector wires.

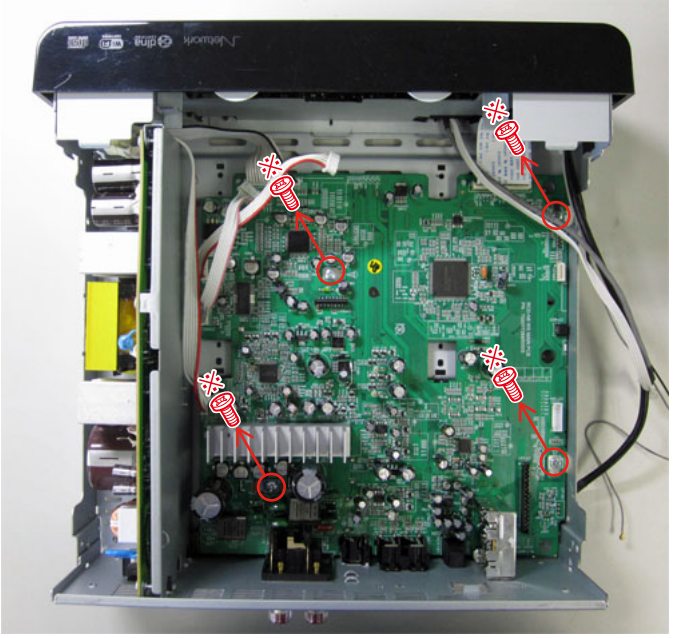

Shooting direction: C

SPECIAL MODE

Special mode setting

Plug AC cord into power outlet while pressing buttons A and B.
Each button continue to press until the lit of ON/STANDBY.

No.	Mode	Button A	Button B	Contents
1	Initialization mode (Factory Reset)	VOLUME UP	CURSOR DOWN	Initializing. Factory Reset *Can't erase the Recently Played list
2	Initialization mode (User Reset)	VOLUME UP	VOLUME DOWN	Initializing. (Contents User's Guide is published) Can erase the Recently Played list
3	Version display	CURSOR UP	-	Version Display
4	CD test mode	ON/ STANDBY	OPEN/ CLOSE	Servo adjustment, Leaser current, ON time
5	Heat Run mode	ON/ STANDBY	SOURCE	Heat run
6	Product mode 1	VOLUME UP	CURSOR RIGHT	Factory use.
7	Product mode 2	VOLUME UP	CURSOR LEFT	Factory use.
8	Protection history mode	CURSOR RIGHT	VOLUME DOWN	To view a history of only one of the most recent protection.
9	Update mode (by disc)	VOLUME DOWN	CURSOR UP	Development/Factory use. The details cannot be disclosed.
10	DPMS forced up date mode	SOURCE	OPEN/ CLOSE	DPMS UP date Mode
11	MAC Address rewrite mode	PLAY/ PAUSE	CURSOR DOWN	Development/Factory use. The details cannot be disclosed.
12	Access to development server mode	PLAY/ PAUSE	CURSOR DOWN	Development/Factory use. The details cannot be disclosed.

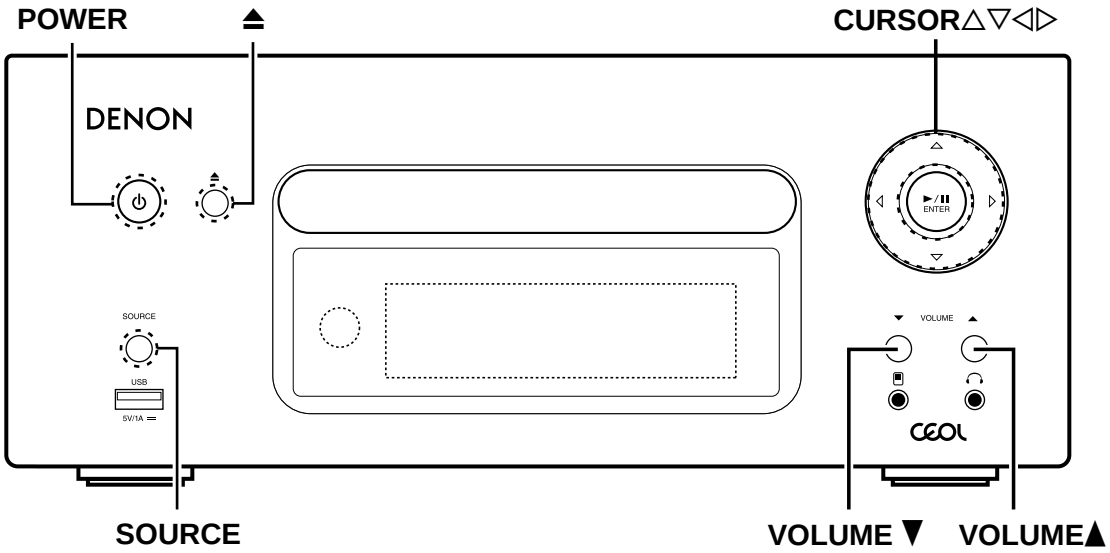

1. Initialization mode (Factory Reset)

Backup data initialization is carried out. Refer to Initialization Items (Default setting).
After initialization, move on to normal mode.

CAUTION
Version information (such as rewriting failed log) Clear.
Clear the history of protection. "Initial value of laser current" and "The accumulated laser on time" not cleared.
Power failure flag is not cleared.
Can't erase the Recently Played list.

Startup display
All lights display(2 seconds) & Power LED(White) lighting (2 seconds).
↓
All off display(2 seconds) & Power LED(Red/Green) lighting (2 seconds).
↓
"Factory Reset" displayed for 5 seconds.

Initialization Items (Default setting)

	Default
source	Internet Radio
TUNER(band)	FM
SDB	OFF
BASS	0 dB
TREBLE	0 dB
BALANCE	CENTER
DIMMER	100%
VOLUME	5
TUNER Preset (Favorite list)	Clear all
Favorite list	Clear all
Clock	00:00 (JP/EU)
TIMER (EVERYDAY/ONCE)	Timer function CD
	ON TIME 0:00 (JP/EU)
	OFF TIME 0:00
Speaker Optimization	ON
iPod mode	Remote mode
AUTO STANDBY	ON (EU), OFF (JP)
Protection 履歴	NO PROTECT
Auto Adjust	Time Zone:+1h (EU),+9h (JP) Summer Time:Off (0h)
Network 設定	DHCP (On)
Network Control	OFF

2. Initialization mode (User Reset)

Backup data initialization is carried out. Refer to Initialization Items (Default setting).
After initialization, move on to normal mode.

CAUTION
The difference is the following three points.
- Version information (such as rewriting failed log) not cleared.
- History of protection not cleared.
- Can erase the Recently Played list.

Startup display
"Initialized" displayed for 5 seconds.

3. Version display

Menu items appear in the Add Version. Otherwise, normal operation.
To exit this mode, unplug the power cord.

Startup display
"Version" displayed for 5 seconds.

How to Display Version
Press SOURCE and Cursor △ , Cursor ▽ to select the Setup. Press ►/❚❚ ENTER button.

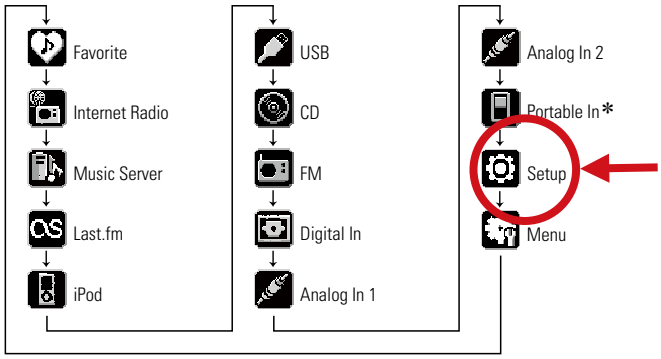

Select the "Version" in the "Setup".

Press ▶/❚❚ ENTER button

The version of the System u-com.

Press Cursor ▽

The version of the boot loader System u-com.

Press Cursor ▽

The version of the boot loader Network u-com.

Press Cursor ▽

The version of the image Network u-com.

4. CD test mode

Startup display

"CD Test Mode" displayed for 5 seconds.

CD TEST MODE display

To exit this mode, unplug the power cord.

4.1. Before starting the test

Open the tray and set the disc.
Even if the disc is, the tray must let OPEN → CLOSE.

4.2. Servo check

Press ►/ ❚❚ ENTER button. Execute the following steps.
* ►/ ❚❚ ENTER button continuously for over 1 second to switch directly to SUB CODE readout in step ⑤. Press the SOURCE button to return to "0 CD TEST MODE".

►/❚❚ ENTER button

① LD ON

►/❚❚ ENTER button

② FOCUS ON

►/❚❚ ENTER button

③ CLV ON

►/❚❚ ENTER button

④ TRACKING ON

►/❚❚ ENTER button

⑤ SUB CODE readout (playback sound output)
The BER (Block Error Rate) generated in 1second's time is displayed of the display.

Cursor ◁ button

Cursor ▷ button

Cursor ◁ button

Cursor ▷ button

Inner (IN), Ataru Amane (MID), outer (OUT) to play go to three places, make the error count.

4.3. Pickup movement

In the stop mode, pickup moves in FWD (outwards) or REV (inwards) direction when Cursor ▷ or Cursor ◁ button pressed.
Pickup movement stops when button released.(Pickup moves while button is pressed.)
When Cursor ◁ button pressed, move to stop operation after detection that inner switch has turned on.

4.4. All servo on and Auto Adjustment

When Cursor △ button is pressed, all servos turn on, auto adjustment is performed and switch to playback operation. (Playback sound output)

Stop (stop to the playback state after auto adjustment)

When SOURCE button is pressed, play operation and servo stop. The following will be displayed.
After stopping, conduct reading of auto adjust values.

Adjustment value display (After All Servo on and Auto Adjustment)

Press the SOURCE button, after All servo on and Auto Adjustment.
When Cursor △/▽ button is pressed, the adjustment values are displayed in the following order.
①FOCUS BALANCE
②FOCUS GAIN
③TRACKING BALANCE
④TRACKING GAIN
⑤FOCUS OFFSET
⑥TRACKING OFFSET
⑦RFRP
(Caution) If you have not completed the adjustment, the value is not correct.

4.5. All servo on and auto adjustment.

When VOLUME ▲ button is pressed for over 1 second while the Unit is in the CD TEST MODE, the laser turns on and the laser current is measured.

The laser drive current undergoes A/D conversion for calculation. The decimal point is omitted.
The current value is updated every 3 seconds.
Press the SOURCE button, CD TEST MODE display reappears.
Stored data is not cleared, even when the Unit is reset(Factory/User).

Overwriting the stored data

When the ►/ ❚❚ ENTER button is pressed for over 5 seconds while the laser current is displayed, the current value is stored in the EEPROM (overwriting the stored data).

Once rewriting is completed, the display in "Laser current display" reappears. Rewriting is performed upon shipment from the factory and when the mechanism is replaced.

4.6. Accumulated laser on time display

When the Volume ▼ button is pressed while this Unit is in the "CD TEST MODE "displayed, the accumulated laser on time is displayed.

The laser drive times are added and the result is displayed.
One count corresponds to 10 minutes. The accumulated laser on time is displayed in hours. Displays up to 10922 hours.
Press the SOURCE button, CD TEST MODE display reappears.
The count values are not cleared, even when the set is reset (Factory/User).

Count value is reset

When the ►/ ❚❚ ENTER button is pressed for over 5 seconds while the accumulated laser on time is displayed, the count value is reset.

Count value is reset upon shipment from the factory and when the mechanism is replaced.

5. CD heat run mode

Heat run mode Startup display

"Heatrun Mode" displayed for 5 seconds.

Press the Cursor △/▽ button to switch the mode. (H.R. Normal, H.R. Short, H.R. Chacking)
After loading the disc, press ►/ ❚❚ ENTER button.
While heat run, the operation of each button is not valid If an error occurs, display the error and stop operation at that point. Refer to Heat run error code table.
To exit this mode, unplug the power cord.

5.1. Normal heat run mode

Playing from the first track to last track on disc. After disc playback has finished, then tray open and close. And playback again.
The heat run repetition no. is incremented (increased by 1) when the tray is opened.
Repeat this operation.
[H.R. Normal] displayed.

Select "H.R.Normal", and press ►/ ❚❚ ENTER button.
Press the Cursor △ button to display the count.

5.2. Heat run Short mode

Playing last track on disc. After disc playback has finished, then tray open and close. And playback again.
The heat run repetition no. is incremented (increased by 1) when the tray is opened.
Repeat this operation.
[H.R. Short] displayed.

Select "H.R.Short", and press ►/ ❚❚ ENTER button.
Press the Cursor △ button to display the count.

5.3. Heat run chacking mode

TOC read the CD, the first song disk search, open / closed later, and again read TOC.
The heat run repetition no. is incremented (increased by 1) when the tray is opened.
Repeat this operation.
[H.R. Chacking] displayed.

Select "H.R.Chacking", and press ►/ ❚❚ ENTER button.
Press the Cursor △ button to display the count.

5.4. Error display

Press the Cursor △/▽ to display the error information.

Heat run error code table

Error Code	Details of Error code
E1-00	Disc cannot be detected
E1-01	Tracking offset adjustment not possible
E1-02	Focus offset adjustment not possible
E2-00	Focus servo dropped during playback.
E2-01	Focus servo dropped during searching.
E2-03	Focus servo dropped during TOC reading.
E2-05	Focus servo dropped during manual search.
E2-10	Subcode can no longer be read during playback
E2-11	Subcode can no longer be read during searching
E2-12	Subcode can no longer be read during TOC reading
E2-14	Subcode cannot be read during pause
E2-15	Subcode cannot be read during manual search
E3-00	TOC could not be read within specified time
E3-01	PVD/SVD analysis could not be completed within specified time
E4-04	Search time out (The search was not completed within the stipulated time)
E4-05	Decoder bus error (Error in communications with CD decoder)
E5-00	Inner switch not on
E6-00	Inner switch not off
E8-00	Tray is not opened by the specified time.
E8-01	Tray is not closed by the specified time.
E9-00	CD Microprocessor error
E9-01	Other error

6. Product Mode 1

Startup display

"Product Mode1" displayed for 5 seconds.

To exit this mode, unplug the power cord.

7. Product Mode 2

Startup display

"Product Mode2" displayed for 5 seconds.

Tested during production to perform the following settings automatically.
Sleep setting : 4 minutes
Auto Standby :4 minutes
Sleep setting and timer started.
Auto Standby to set up and will stand under the following conditions.

Auto Standby Conditions

CD : No Disc, Tray Open, Unsupported Disc or continue no operation and Stop state.
USB/iPod : No Connection or Unsupported Disc or continue no operation and Stop state.
Network : No Connection or Unsupported Disc or continue no operation and Stop state.
DIGITAL IN : No Input(unlock). And continue no operation.
Portable In : No Input (no connection of terminal). And continue no operation.
ANALOG IN : Continue no operation.

To exit this mode, unplug the power cord.

8. Protection history display mode

Startup display

"Detect Protection" displayed for 5 seconds.

To exit this mode, unplug the power cord.

Protection history display mode

Thermal protection

Speaker short protection

Potential difference across the terminal detects that the speaker was more than DC9V.

DC protect 2

Short of '+B/-B+12V_D or +12V_Aor -12V_A or +29V fail'

Over current

Over-current detection digital amplifier

Protection history is reset.

When the Cursor △ button is pressed for over 5 seconds while the protection history is displayed, the count value is reset.

After the reset is complete, the display "No Protection".

Protection history is not cleared, even when the set is reset User Reset.

9. Update mode (by disc)

Firmware update disc by.
When you replace this Unit‘s WLAN MODULE (CX870), you need software updates.
Refer to [VERSION UPGRADE PROCEDURE OF FIRMWARE "1. How to update by disc"].
Upgrade by DPMS. This mode describes a display only.
To exit this mode, unplug the power cord.

Startup display

"Disc Update Mode" displayed for 5 seconds.

The tray will open.

Insert disc.

The following states are displayed.

Display update file.

Updating display.

Error code table with disk version up

Error Code	Details of Error code
01	Tray Open/Close failure
02	No Disc
03	Disc error(TOC not read)
04	No update file
05	Update file read error
10	Update file check sum error
11	Erase failure
12	Write failure
13	Verify uncorrect
20	Update file check sum error
21	Erase failure
22	Write failure
23	Verify uncorrect
24	Communication error
30	Update failure check sum error
31	Erase failure
32	Writef failure
33	Verify failure
34	Communication error
B2	DM8x0 firmware rewrite error information received

10. DPMS UP date mode

Update the firmware of DPMS.
Refer to [VERSION UPGRADE PROCEDURE OF FIRMWARE "2. How to update by DPMS"].

Error code table

- Preparation operation rewritten, Update error code checking. (Check ETHERNET unit)

Error Code	Details of Error code	Coping strategies
01	Login failed(DPMS Access Login Incorrect notification)	Reset and update again. Carry out the update in an environment that has little network load.
02	Login failed(DPMS Access Server Busy information)	Carry out the update in an environment that has little network load.
03	Login failed(DPMS Access link failure information)	Check the network connection. Carry out the update in an environment that has little network load.
04	Firm Info response acquisition error recived	Check the network connection. Carry out the update in an environment that has little network load.
05	Firm Info response acquisition TimeOut	Check the network connection. Carry out the update in an environment that has little network load.
06	All Firm Info response acquisition error recived	Check the network connection. Carry out the update in an environment that has little network load.
07	All Firm Info response acquisitionTimeOut	Check the network connection. Carry out the update in an environment that has little network load.
08	Main Firm Info response acquisition error recived	Check the network connection. Carry out the update in an environment that has little network load.
09	Main Firm Info response acquisition TimeOut	Check the network connection. Carry out the update in an environment that has little network load.
0A	DownLoad failed ((NG)information recieved)	Check the network connection. Carry out the update in an environment that has little network load.
0B	DownLoad failed((ServerBusy) information recieved)	Check the network connection. Carry out the update in an environment that has little network load.
0C	DownLoad failed((connection failed)information recived)	Check the network connection. Carry out the update in an environment that has little network load.

• Firm error codes at the main microprocessor rewritten. (Check main microprocessor)

Error Code	Details of Error code	Coping strategies
10	Firm Info response acquisition TimeOut(Main rewrite Firmware recived failure(TimeOut))	Turn off and on the power. Updating starts automatically.
11	Firm Info response acquisition recived error(Main rewrite Firmware recived failure(Error)	Turn off and on the power. Updating starts automatically.
12	Firm Info response acquisition recived error (Main rewirte Firmware recived data incorrect(CheckSumError))	Turn off and on the power. Updating starts automatically.
13	Rewrite failure (BlockErase failued before Main rewriting)	Turn off and on the power. Updating starts automatically.
14	Rewrite failure (BlockWrite failued before Main rewriting)	Turn off and on the power. Updating starts automatically.
15	Rewrite failure (Verify incorrect after Main rewriting)	Turn off and on the power. Updating starts automatically.
36	Login failure(DPMSAccess Login incorrect infomation)	Carry out the update in an environment that has little network load.
37	Login failure(DPMSAccess Server busy infomation)	Carry out the update in an environment that has little network load.
38	Login failure(DPMSAccess connection failed infomation)	Check the network connection. Carry out the update in an environment that has little network load.
39	Login failure(DPMSAccess access TimeOut)	Check the network connection. Carry out the update in an environment that has little network load.
3A	DownLoad failure(Download error (NG)information recieved)	Turn off and on the power. Updating starts automatically. Carry out the update in an environment that has little network load.
3B	DownLoad failure(Download error (ServerBusy) information recieved)	Turn off and on the power. Updating starts automatically. Carry out the update in an environment that has little network load.
3C	DownLoad failure(Download error (connection failed) information recived)	Turn off and on the power. Updating starts automatically. Carry out the update in an environment that has little network load.

- CX870 system Firm error codes when rewriting. (Check ETHERNET unit)

Error Code	Details of Error code	Coping strategies
A0	Net not connected	Check the network connection. Carry out the update in an environment that has little network load.
A1	Net Connection TimeOut can not get status	Check the network connection. Carry out the update in an environment that has little network load.
A2	Login failed	Check the network connection. Carry out the update in an environment that has little network load.
A3	Login failed	Check the network connection. Carry out the update in an environment that has little network load.
A4	Login failed	Check the network connection. Carry out the update in an environment that has little network load.
A6	Error receiving response FirmInfo acquisition	Turn off and on the power. Updating starts automatically. Carry out the update in an environment that has little network load.
A7	FirmInfo Get Response TimeOut	Turn off and on the power. Updating starts automatically. Carry out the update in an environment that has little network load.
A8	Net not connected	Check the network connection. Carry out the update in an environment that has little network load.
A9	Net Connection TimeOut can not get status	Check the network connection. Carry out the update in an environment that has little network load.
AA	After download request, Login Failed	Check the network connection. Carry out the update in an environment that has little network load.
AB	After download request, Login Failed	Check the network connection. Carry out the update in an environment that has little network load.
AC	After download request, Login Failed	Check the network connection.Carry out the update in an environment that has little network load.
AE	Failure of DownLoad	Turn off and on the power. Updating starts automatically. Carry out the update in an environment that has little network load.
AF	Failure of DownLoad	Turn off and on the power. Updating starts automatically. Carry out the update in an environment that has little network load.
B0	Failure of DownLoad	Turn off and on the power. Updating starts automatically. Carry out the update in an environment that has little network load.
B2	Update error	Turn off and on the power. Updating starts automatically. Carry out the update in an environment that has little network load.

Failure to update, After the move again CX870 self display retry processing.

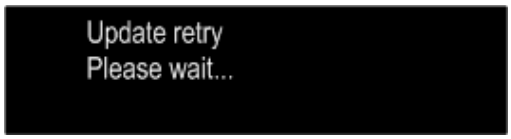

11. MAC Address rewrite mode

Rewriting the MAC address mode.
Production / development for, there is no detailed description.
To exit this mode, unplug the power cord.

12. Access to development server mode

Production / development for, there is no detailed description.
To exit this mode, unplug the power cord.

ABOUT REPLACE THE MICROPROCESSOR WITH A NEW ONE

When replaced of the U-PRO (Microprocessor) or the Flash ROM, confirm contents of the following.

PWB Name	Ref. No.	Description	After replaced	Remark
MAIN	IC403	R5F56108VNFP	**B**	
-	30	CX870-3B-D60 JUKEBOX NETWORK 24ANT 64M SDRAM NEW F/W	**B**	

After replaced

A : Mask ROM (With software). No need write-in of software to the microprocessor.

B : Flash ROM (With software). Usually, no need write-in of software. But, when the software was updated, you should be write-in of the new software to the microprocessor or flash ROM. Please check the software version.

C : Empty Flash ROM (Without software). You should be write-in of the software to the microprocessor or flash ROM. Refer to "Update procedure" or "writing procedure", when you should be write-in the software.

VERSION UPGRADE PROCEDURE OF FIRMWARE

NOTE: When you replace the RCD-N8 WLAN MODULE (963189100420), you need software updates.
Refer to [**CAUTION IN SERVICING** "ABOUT REPLACE THE WLAN MODULE WITH A NEW ONE"].

1. How to update by DISC

1.1. Procedure of making CD-R

(1) Please download zipped file, and unzip on your PC.

For JP : RCDN8JP_xxxxxxxxxxxx-xxxx.zip

(2) The following 2-file will be appeared.

RCD-N8_SYS_000xxx.BIN
and
RCD-N8_BCI_CRNANM.BIN(E2)
or
RCD-N8_BCI_CRJPNM.BIN(JP)

(3) Please burn 2-file to CD-R with the following conditions.

① Multi Session：No
② File System：ISO9660+Joliet
③ Mode: MODE1
④ Writing speed: 8~16 speed (according ability of CD-R)
⑤ Writing method: Disc at Once (Finalize(Close)

1.2. Procedure of updating

Pressing the VOLUME▼ and I◀◀ buttons for simultaneously, plug the AC cord into a power outlet.

(1) "Disc Update Mode" is indicated approximately 5 seconds.

(2) Open the Tray.

(3) Please put CD-R on Tray, and press ⏏ button.

(4) After loading CD-R, version number of firmware will be indicated.

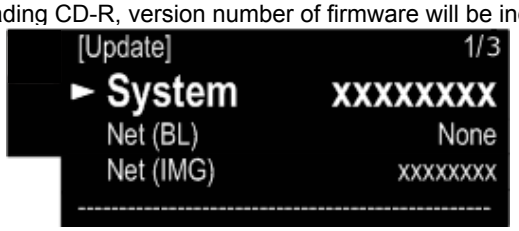

xxxxxx : Version number

(5) If there is no any firmware of updating, [xxxxxx="None"] will be indicated.
Please confirm version of each firmware by Cursor ▲ / ▼ buttons.

(6) Press "Enter" button, unit will update firmware automatically.
Display will be indicated procedure of updating firmware.

First line : Version of updating firmware/ a number of firmware
Second line : Rest time and progress of updating (….%)
Third line : Name of Microprocessor and Version

※ While updating firmware, any buttons of R/C and Front panel are not worked.

---Order of updating---

① System microprocessor (approximately 5minits)
② Network microprocessor (Boot Loader) (approximately 5minits) Only If you need to update
③ Network microprocessor (image) (approximately 30minits)

(7) After 35 minutes, unit will be updated completely, and open the tray automatically.

(8) Remove CD-R, and pull out AC cord from AC wall socket.

(9) Please initialize unit after updating.

① Please insert AC cord to AC wall socket while pressing Volume▲ button and Volume▼ button.
② After power LED is indicated, remove your finger.
③ "Initialize" will be indicated 5 seconds.
④ Pull out AC cord from AC wall socket.

(10) Updated unit completely.

1.3. Trouble Shooting

If you find the following Error codes, please solve root cause of malfunction.

(1) If updating is failed, the following ERROR indication is displayed.

First line (Error number): "Updating fail: YY, n/N"YY: Error number
Second line (Time on error): "xx min yy%"
Third line (name of firmware)

Error code table

Error Code	Details of Error code
① Error before updating	
01	Tray Open/Close failure
02	No Disc
03	Disc error(TOC not read)
04	No update file
05	Update file read error
② Error at writing System Microprocessor	
10	Update file check sum error
11	Erase failure
12	Write failure
13	Verify incorrect
③ Error at writing Display Microprocessor	
20	Update file check sum error
21	Erase failure
22	Write failure
23	Verify incorrect
24	Communication error
③ Error at writing DM8x0	
30	Update failure check sum error
31	Erase failure
32	Write failure
33	Verify incorrect
34	Communication error
B2	DM8x0 firmware rewrite error information received

1.4. Notice of updating firmware

(1) When unit is updating firmware on item "**1.2. Procedure of updating** (6)", do not turn off the power, or pull out AC cord from AC wall socket.

(2) **If power supply stop to supply microprocessor, unit will be broken.**

① When AC cord is pulled while updating System firmware.
⇒ System microprocessor will be broken. Please replace it.

② When AC cord is pulled while updating Display firmware.
⇒ Display microprocessor will be broken. Please replace it.

③ When AC cord is pulled while updating DM870Net (IMG) firmware.
⇒ Please update firmware by CD-R again.

(3) When updating is not finished (not 100%), but tray opens automatically over 35 minutes. Probably unit will be updated firmware completely, therefore please confirm version of firmware. If no, please update again.

(4) After 45 minutes, try does not open or try does open with error indication, please update firmware of unit with CD-R again.

2. How to update by DPMS

2.1. Connecting to the Network

(1) System Requirement

- Internet Connection by Broadband Circuit
- Modem
- Router
- Ethernet cable (CAT-5 or greater recommended)

(2) Setting

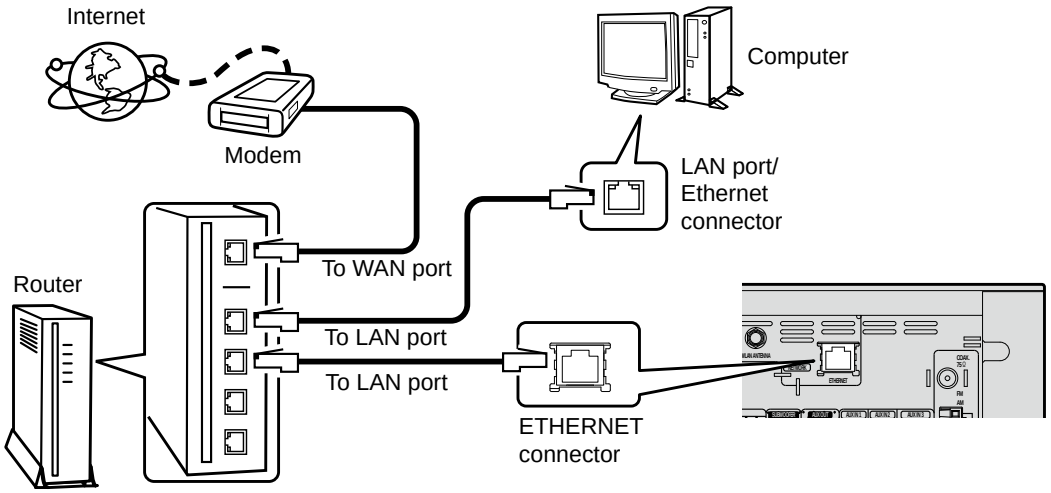

2.2. Check for Update and Update

Check if the latest firmware exists. You can also check approximately how long it will take to complete an update.

(1) Turn on the power pressing ON/STANDBY button.

(2) Press SOURCE and Cursor △/▽ buttons select to Setup. Press ►/❚❚ ENTER button.

- Press Cursor △/▽ buttons select to General For UPDATE.
- Press Cursor △/▽ buttons select to Firmware. Press ►/❚❚ ENTER button.
- Press Cursor △/▽ buttons select to Update. Press ►/❚❚ ENTER button.
- Press Cursor △/▽ buttons select to Check for Update. Press ►/❚❚ ENTER button.

(3) Press the ►/❚❚ ENTER button.

- The latest version of the firmware uploaded to the web is displayed.
- If the latest firmware version is on the web, proceed to (4).
- If the latest firmware is already installed, press the SOURCE button to close the Update menu.

(4) Press ►/❚❚ ENTER button. Select "YES", then press ►/❚❚ ENTER button.

(5) Firmware Update will be started.

--- Cautions on Firmware Update ---

- In order to use these functions, you must have the correct system requirements and settings for a broadband Internet connection.
- Do not turn off the power until updating is completed.
- Even with a broadband connection to the Internet, approximately about 1 hour is required for the updating procedure to be completed.
  Once updating starts, normal operations on the RCD-N8 cannot be performed until updating is completed.
  Also, setting items may be initialized.
  Make a note of the settings before updating, and set them again after updating.

TROUBLE SHOOTING

1. OLED dosen't light

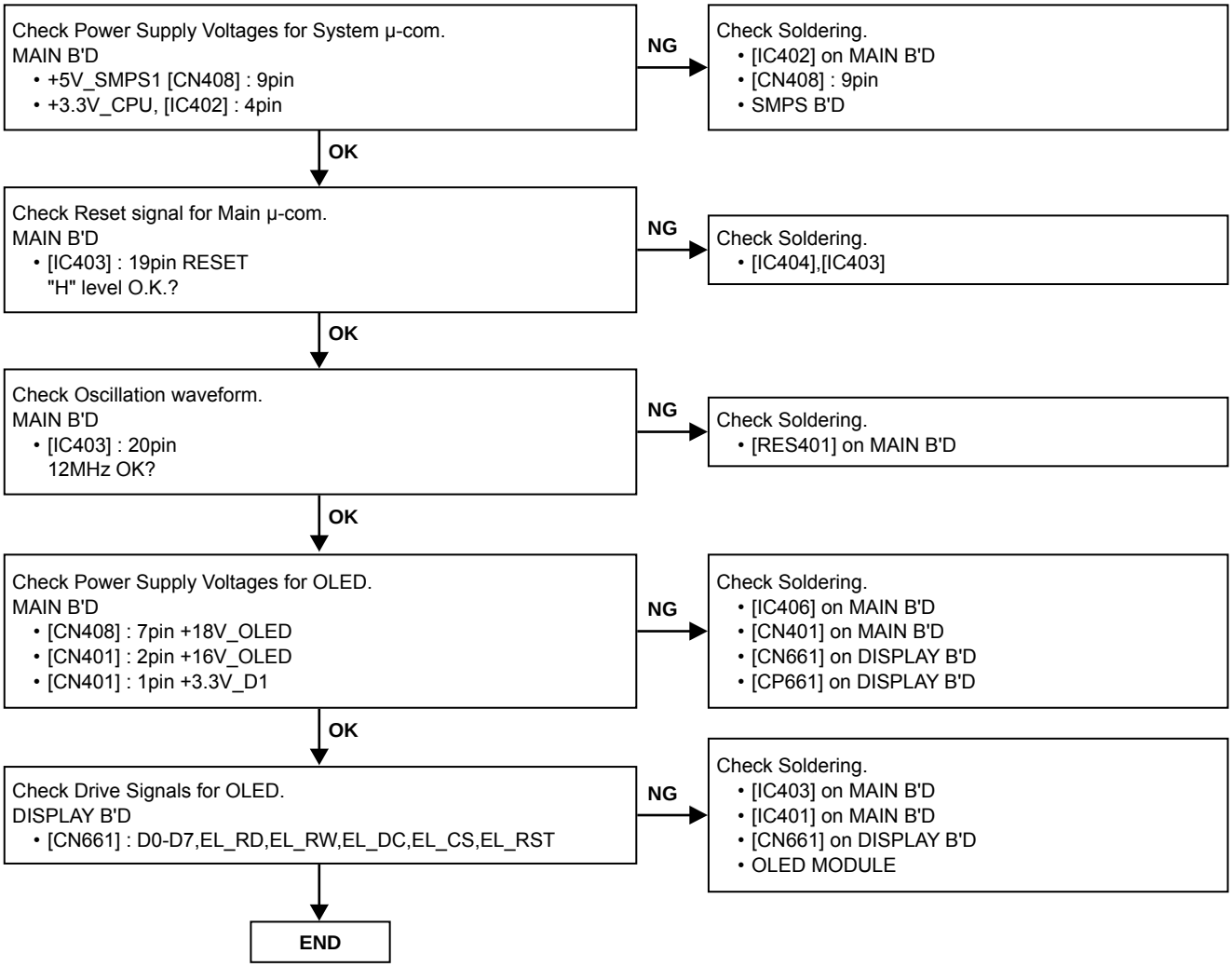

2. No Sound, Noise generated

2.1. COMMON

Check Power Supply Voltages for DIR.
MAIN B'D
- [IC103] : 46pin +5V_A
- [IC103] : 22,36,42pin +3V3_D1

O.K.?

NG →
Check Soldering.
- [IC102] : IN : +12V_A / OUT : +5V_A
- [IC401] : IN : +5V_SMPS1 / OUT : +3V3_D1
- POWER B'D

OK ↓

Check Power Supply Voltages for PWM CONTROLLER.AMP B'D.
MAIN B'D
- [IC108] : 9,15,36,54pin

VDD +3.3V OK?

NG →
Check Soldering.
- [R238,R239,R240] : +3V3_5508

OK ↓

Check Power Supply Voltages for AMP IC.
MAIN B'D
- [IC118] : 1,36,18,19pin

GVDD +12V OK?
- [IC118] : 21,26,29,34pin

PVDD +29V OK?

NG →
Check Soldering.
- [R241,R242,R243] : +12V_5142
- [CN408] : 1pin : +12V_D
- [CN101] : 1,2,3pin : +29V
- POWER B'D

OK ↓

Check Reset signal for DIR.
MAIN B'D
- [IC103] : 34pin DIR_RESET

"H" level O.K.?

NG →
Check Soldering.
- [IC403] : 68pin DIR_RESET on MAIN B'D

OK ↓

Check Reset signal for PWM CONTROLLER.
MAIN B'D
- [IC108] : 11pin RESET

"H" level O.K.?

NG →
Check Soldering.
- [IC403] : 77pin 5508_RESET on MAIN B'D

OK ↓

Check Reset signal for AMP IC.
MAIN B'D
- [IC118] : 5,15pin VALID

"H" level O.K.?

NG →
Check Soldering.
- [IC108] : 39pin VALID on MAIN B'D

OK ↓

Check Oscillation waveform.
MAIN B'D
- [IC103] : 40pin TXO

24.576MHz OK?

NG →
Check Soldering.
- [XTAL101] on MAIN B'D

OK ↓

Check Oscillation waveform.
MAIN B'D
- [IC108] : 19pin XTL_O

13.5MHz OK?
- [IC108] : 63pin MCLK

MCLK OK?

NG →
Check Soldering.
- [XTAL102] on MAIN B'D
- [IC41] : 17pin 5508_MCLK on MAIN B'D

OK ↓

Check control signal for DIR.
MAIN B'D
• [IC103] : 23,24,25,26pin
DIR_D0,DIR_DI,DIR_CL,DIR_CE

NG → Check Soldering.
• [IC403] : 86,87,88,89pin
DIR_D0,DIR_DI,DIR_CL,DIR_CE

OK ↓

Check control signal for PWM CONTROLLER.
MAIN B'D
• [IC108] : 24,25pin
5508_SDA, 5508_SCL
• [IC108] : 13,14pin
PDN,MUTE
"H" level O.K.?

NG → Check Soldering.
• [IC403] : 82,83pin
5508_SDA, 5508_SCL on MAIN B'D
• [IC108] : 13,14pin PDN,MUTE on MAIN B'D

↓

END

2.2. CD PLAY BACK

Check Power Supply Voltages for CD
MAIN B'D
• [CN408] : 1pin : +12V_D
• [IC282] : IN +12V_D / OUT : +7V5_D1
• [CN408] : 9pin +5V_SMPS1
• [IC104] : IN +5V_SMPS1 / OUT : 3V3_D1

NG → Check Soldering.
• MAIN B'D [CN408]
[IC282],[IC104]
• SMPS B'D

OK ↓

Check Power Supply Voltages for CD
MAIN B'D
• +1.5VD [IC901] : 2pin 1.5V OK?

NG → Check Soldering.
• [IC901] on MAIN B'D

OK ↓

Check Reset signal for CD.
MAIN B'D
• [IC902] : 69pin /RST "H" level O.K.?

NG → Check Soldering.
• [IC403] : 115pin DECRST on MAIN B'D

OK ↓

Check Oscillation waveform.
MAIN B'D
• [IC902] : 49pin XO
16.9344MHz OK?

NG → Check Soldering.
• [X901] on MAIN B'D

OK ↓

Check Digital Audio Data for CODEC.
MAIN B'D
• [IC103] : 30pin CD_SPDIF

NG → Check Soldering.
• [IC902] : 33pin CD_SPDIF on MAIN B'D
• [IC103] : 30pin CD_SPDIF on MAIN B'D

OK ↓

*
Check Digital Audio Data output from CODEC.
MAIN B'D
• [IC103] : 17,18,19pin
5508_LRCK,5508_SCLK,5508_SDATA

NG → Check Soldering.
• [IC103] : 17,18,19pin on MAIN B'D

OK ↓

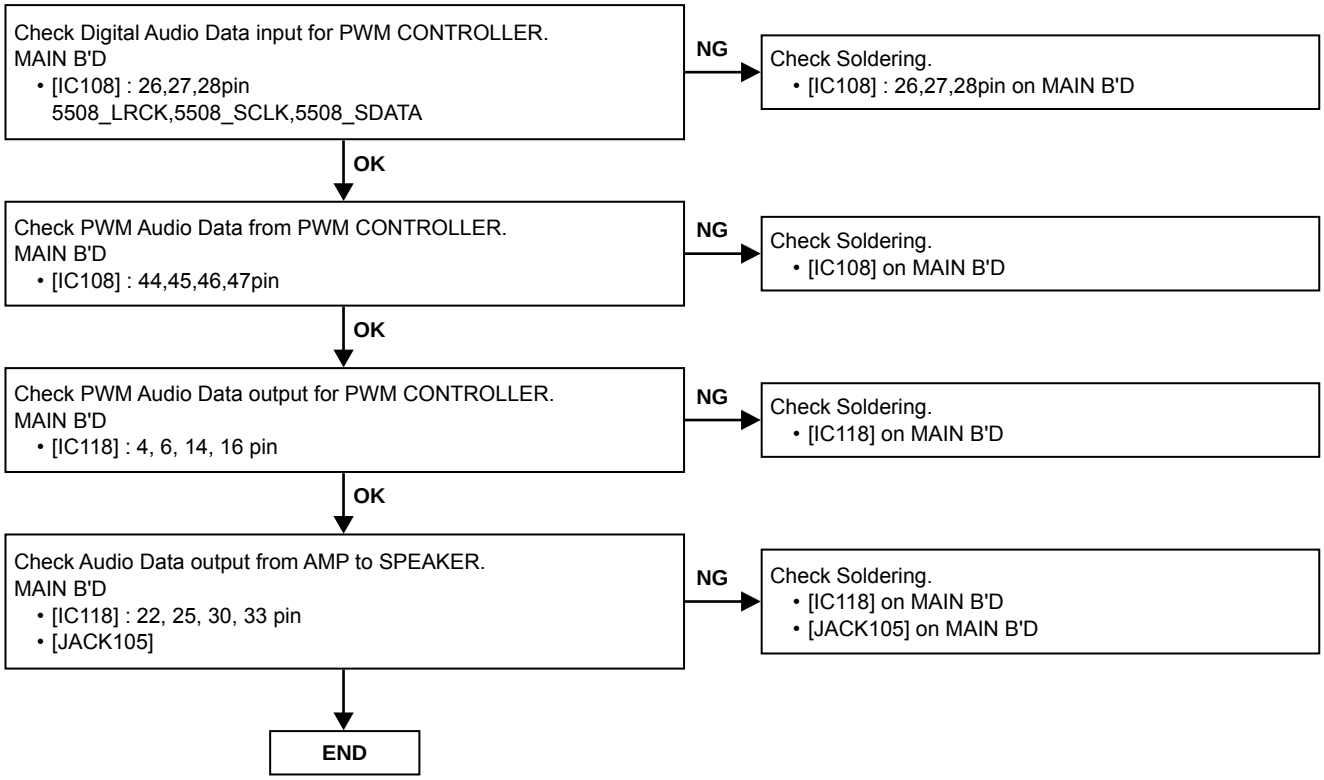
Check Digital Audio Data input for PWM CONTROLLER.
MAIN B'D
• [IC108] : 26,27,28pin
5508_LRCK,5508_SCLK,5508_SDATA
NG
Check Soldering.
• [IC108] : 26,27,28pin on MAIN B'D
OK
Check PWM Audio Data from PWM CONTROLLER.
MAIN B'D
• [IC108] : 44,45,46,47pin
NG
Check Soldering.
• [IC108] on MAIN B'D
OK
Check PWM Audio Data output for PWM CONTROLLER.
MAIN B'D
• [IC118] : 4, 6, 14, 16 pin
NG
Check Soldering.
• [IC118] on MAIN B'D
OK
Check Audio Data output from AMP to SPEAKER.
MAIN B'D
• [IC118] : 22, 25, 30, 33 pin
• [JACK105]
NG
Check Soldering.
• [IC118] on MAIN B'D
• [JACK105] on MAIN B'D
END

2.3 . TUNER-in

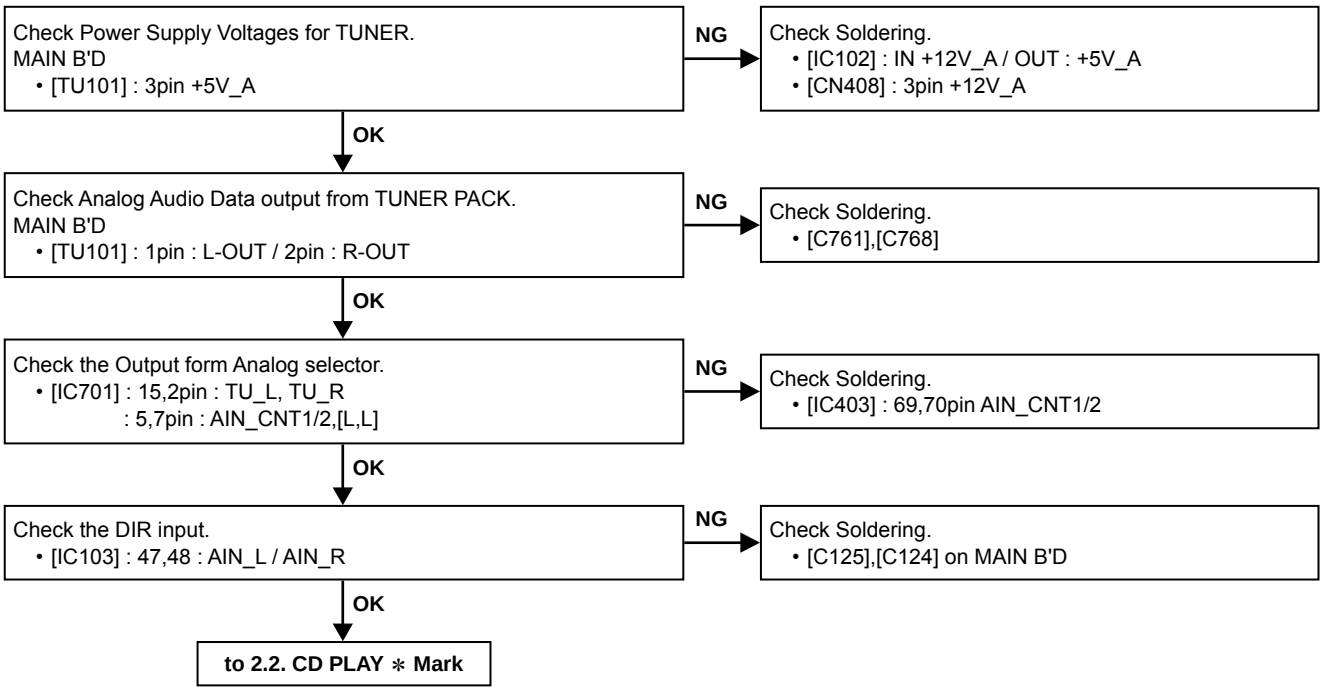

2.4. Portable In

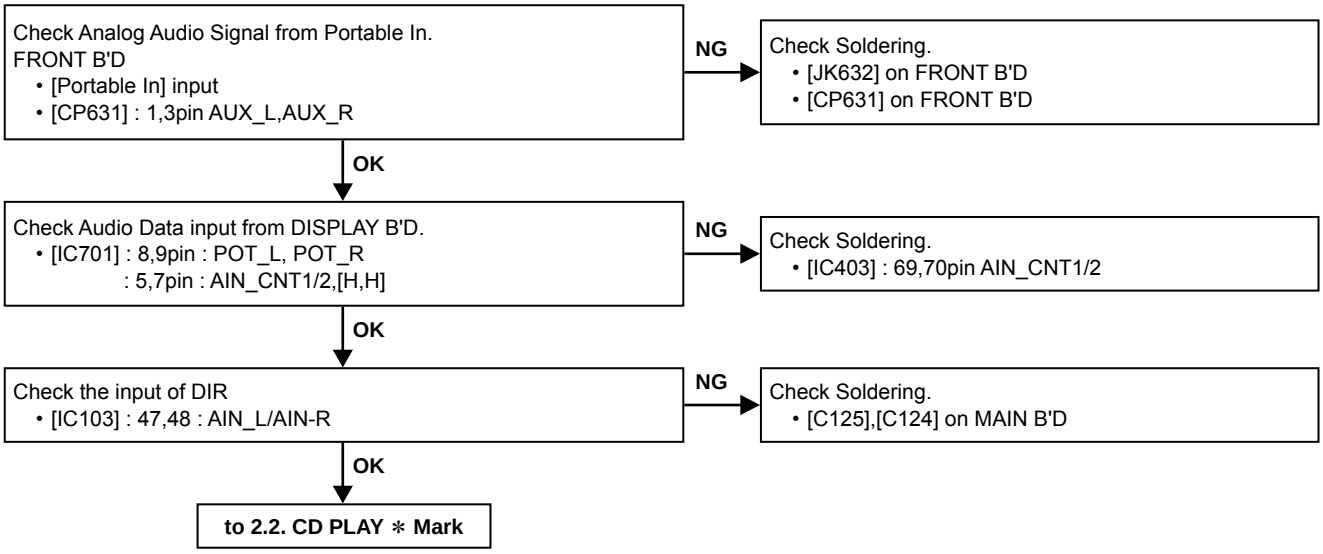

2.5 . Analog In 1/2

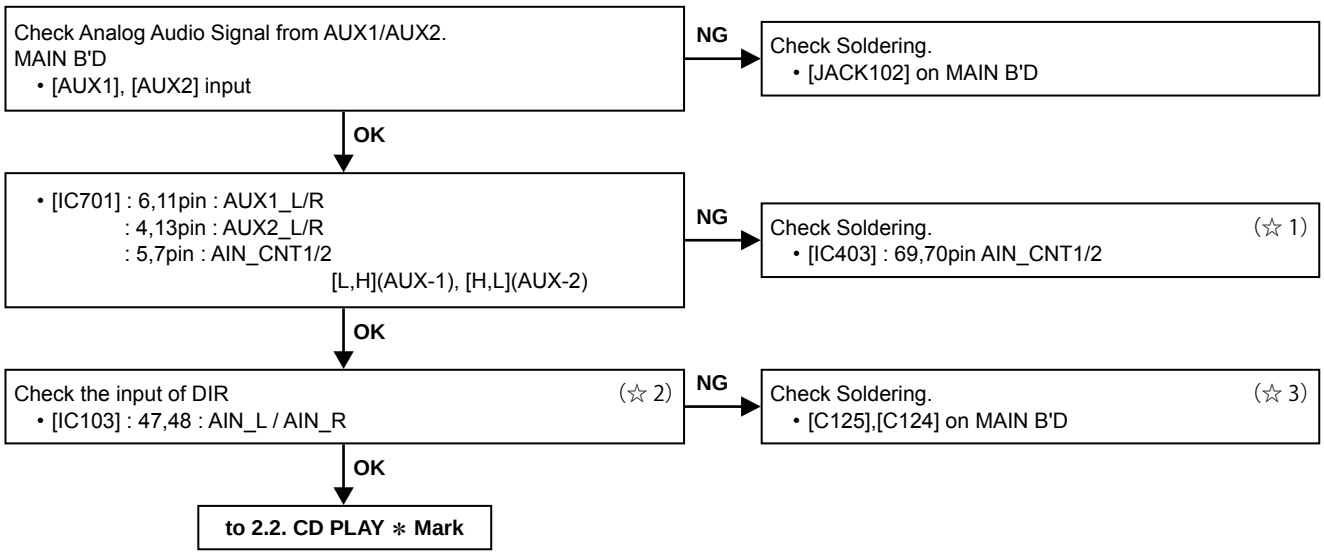

2.6. Digital In

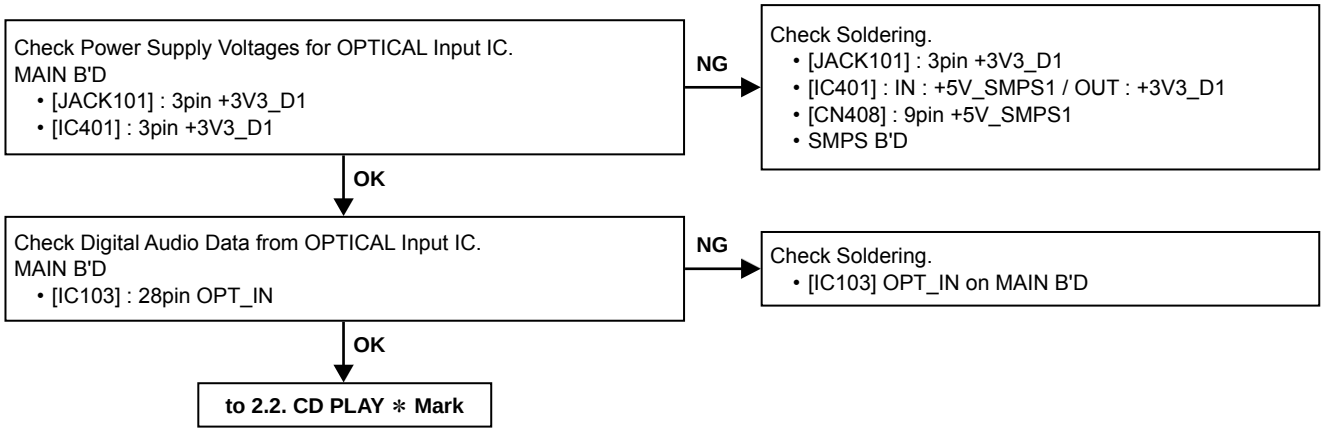

2.7 . USB/iPod Dock/ETHERNET/WiFi

Check Power Supply Voltages for Network.
Network B'D
- [CP302] : 24,25pin : +5V_NET
- [CP302] : 28,29pin : +5V_VBUS

NG →
Check Soldering.
Network B'D
- [CP302] : 24,25pin : +5V_NET
- [CP302] : 28,29pin : +5V_VBUS

MAIN B'D
- [CP201] : 5,6pin : +5V_NET
- [CP201] : 1,2pin +5V_VBUS
- [CN408] : 10pin : +5V_NET
- [CN408] : 11,12pin : +5V_SMPS2
- SMPS B'D

OK ↓

Check Power Supply Voltages for USB.
Network B'D
- [CP301] : 5,6pin +5V

NG →
Check Soldering.
- [CP301] : 5,6pin +5V on Network B'D
- [CN641] : 1,2pin +5V on DISPLAY B'D
- [JACK641] on DISPLAY B'D

OK ↓

Check Power Supply Voltages for iPodDock.
Network B'D
- [CP303] : 1pin +5V

NG →
Check Soldering.
- [CP303] : 1pin +5V on ETHERNET B'D
- [CN303] : 1pin +5V on iPodDock B'D
- [CP701] on iPodDock B'D

OK ↓

Check Power Supply Voltages for CX870.
Network B'D
- [IC306] : 3pin NET_ +3V3
- [IC307] : 3pin NET_ +1V9
- [IC308] : 3pin NET_ +1V2
- [CP302] : 16pin E_P_CONT "H" level O.K.?

NG →
Check Soldering.
- [IC306] on Network B'D
- [IC307] on Network B'D
- [IC308] on Network B'D
- [CP302] : 16pin on Network B'D

OK ↓

Check Reset signal for ETHERNET B'D (CX870)
Network B'D
- [CP302] : 15pin E_RESET
  "H" level O.K.?

NG →
Check Soldering.
- [CP302] : 15pin E_RESET on Network B'D
- [CP201] : 15pin E_RESET on MAIN B'D

OK ↓

Check Digital Audio Data for CODEC.
Network B'D
- [CP302] : 6pin CX870_SPDIF

MAIN B'D
- [CP201] : 24pin CX870_SPDIF

NG →
Check Soldering.
- [CP302] : 6pin CX870_SPDIF on Network B'D
- [CP201] : 24pin CX870_SPDIF on MAIN B'D

OK ↓

to 2.2. CD PLAY ∗ Mark

MEASURING METHOD AND WAVEFORMS

To check the waveforms, the GND (-) probe of the oscilloscope to specified reference voltage.
(Except for Inner SW, TRVSW)

NOTES

Measuring Disc: CD/TCD-784
CD-R/TCD-R082W
CD-RW/TCD-W082W

(It is better to use wires for extending between the probe and test points.)
- When watching the HF waveform, use the extending wire as short as possible.
- When HF waveform is noisy or cannot discriminate the eye-pattern, replace the Traverse Unit after measuring the lop.
- Point ① ～ ⑮ is measured with the point shown below.

1. MAIN PCB : TEST POINT

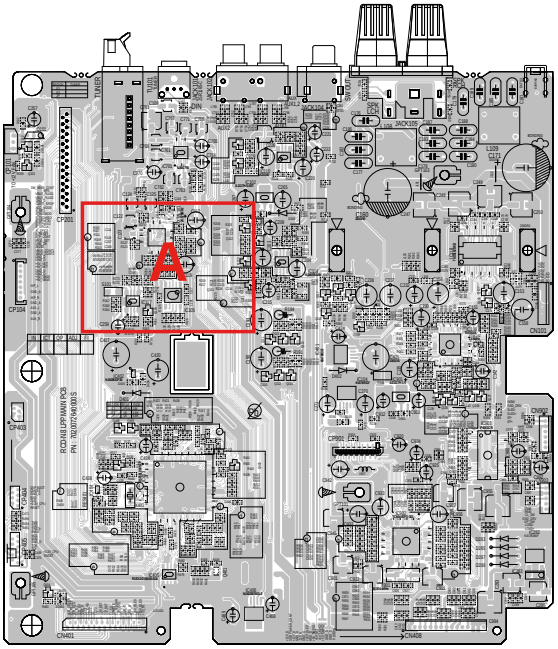

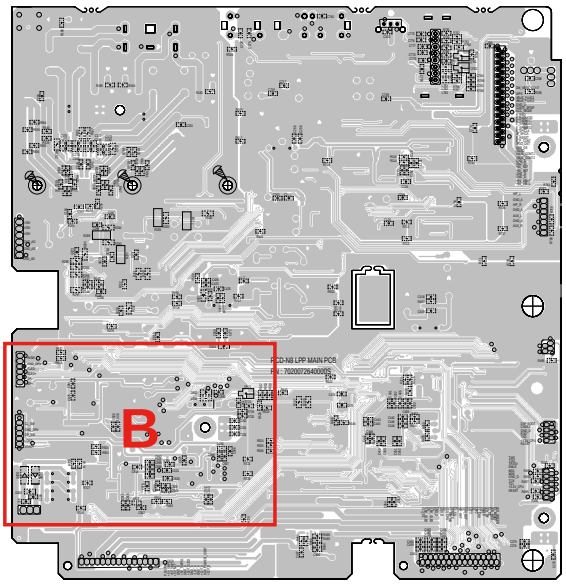

Detail A

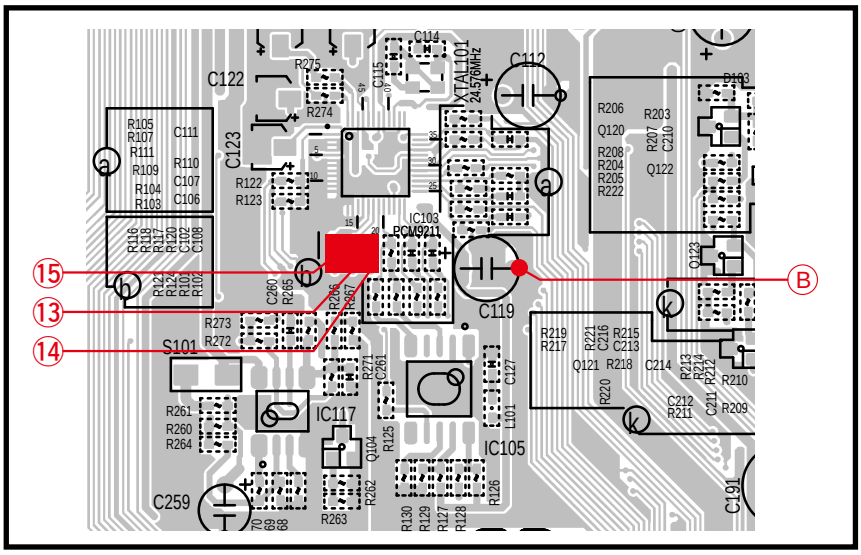

Detail B

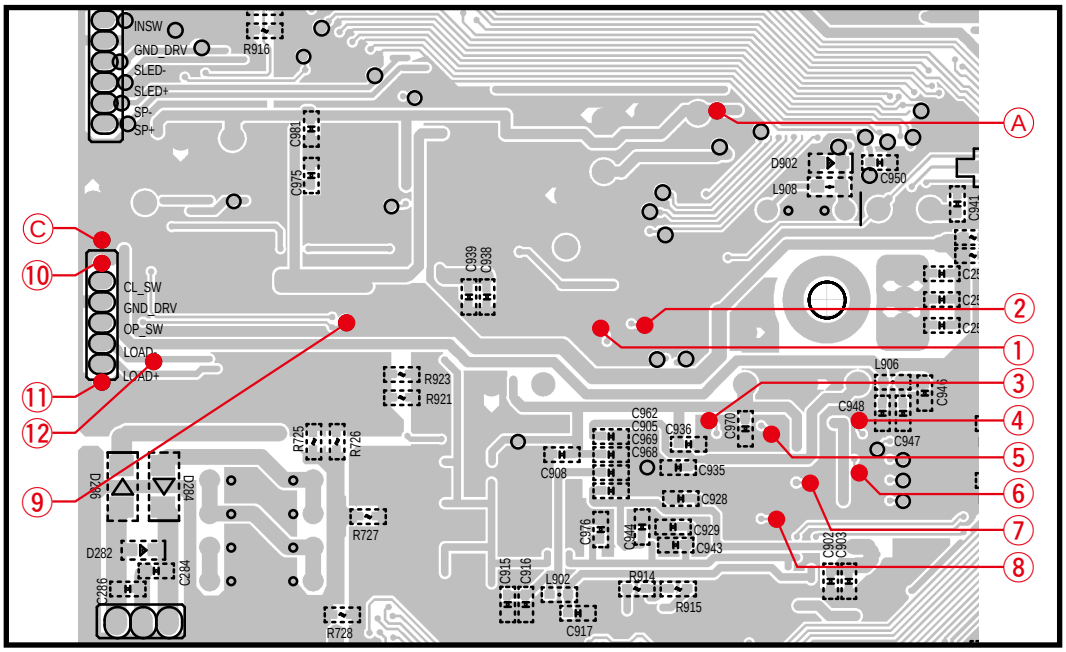

No.	Symbol	
①	TP	RFEQO
②	TP	RFO
③	TP	FEI
④	TP	FOC1
⑤	TP	TEI
⑥	TP	TRO1
⑦	TP	FMO1
⑧	TP	DMO1
⑨	CN26(3)	OPSW
⑩	CN26(5)	CLSW
⑪	CN26(2)	LOAD+
⑫	CN26(1)	LOAD-
⑬	R407	LRCK
⑭	R408	SCLK
⑮	R409	SDATA

No.	Symbol	Reference
Ⓐ	TP	VC : ① ~ ⑧
Ⓑ	C900 -	DGND : ⑬ ~ ⑮
Ⓒ	CN26(4)	GND_DRV : ⑨ ~ ⑫

2. WAVEFORMS

1. DISC PLAY RF WAVEFORM (EYE-PATTERN)

CD(TCD784) PLAY

①RFEQO

2. DISC DETECTION

CD(TCD784) DETECTION

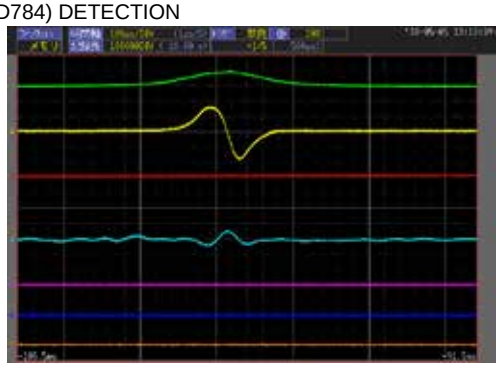

3. TOC READ

CD(TCD784) READ

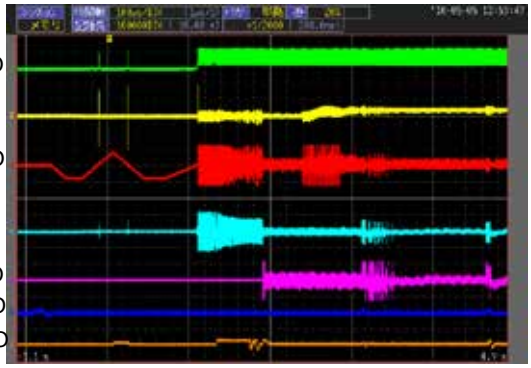

4. FOCUS ADJUSTMENT

CD(TCD784) FOCUS ADJUSTMENT

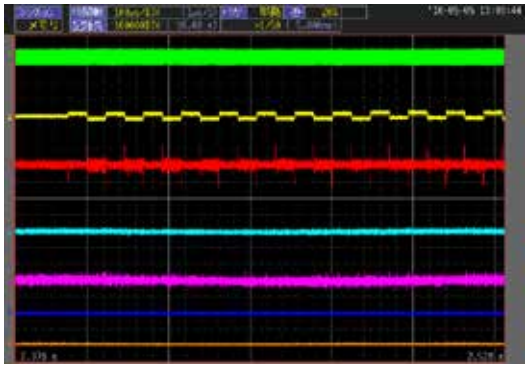

5. CD Playback

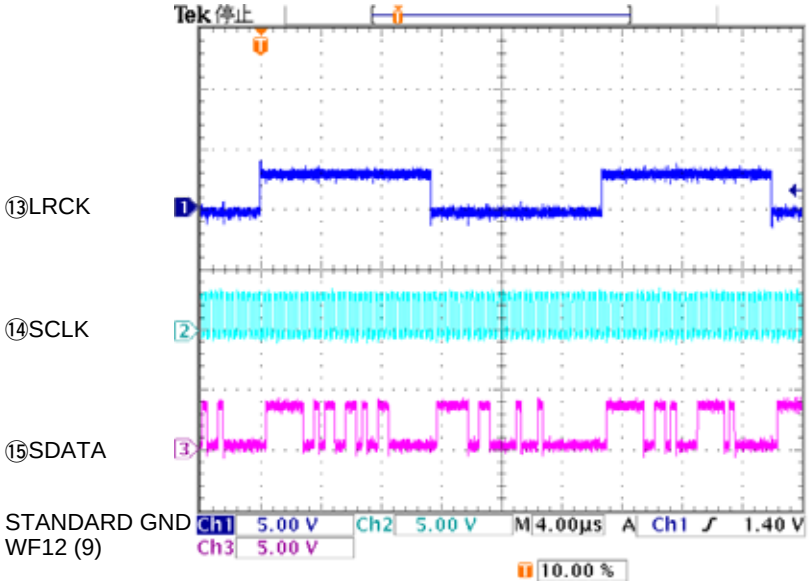

6. LOADER OPEN-CLOSE

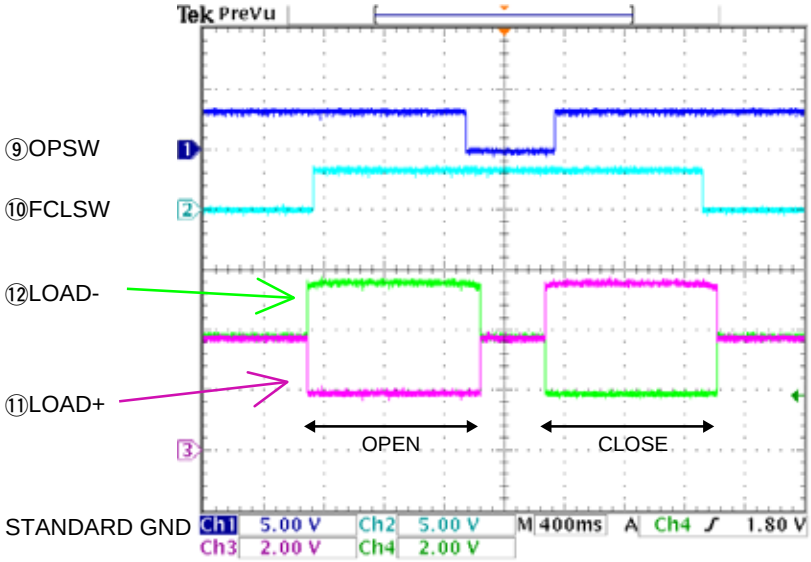

BLOCK DIAGRAM

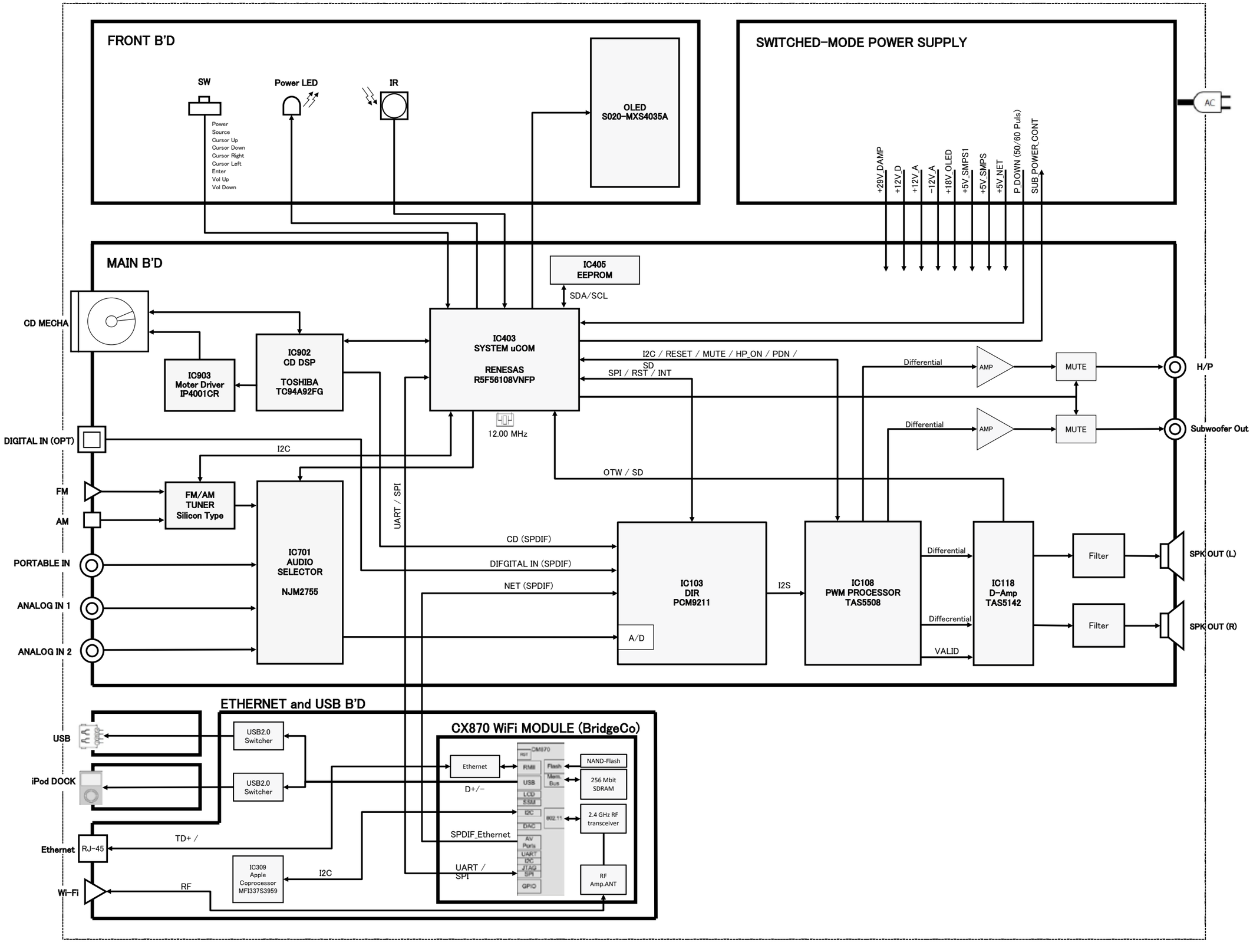

POWER DIAGRAM

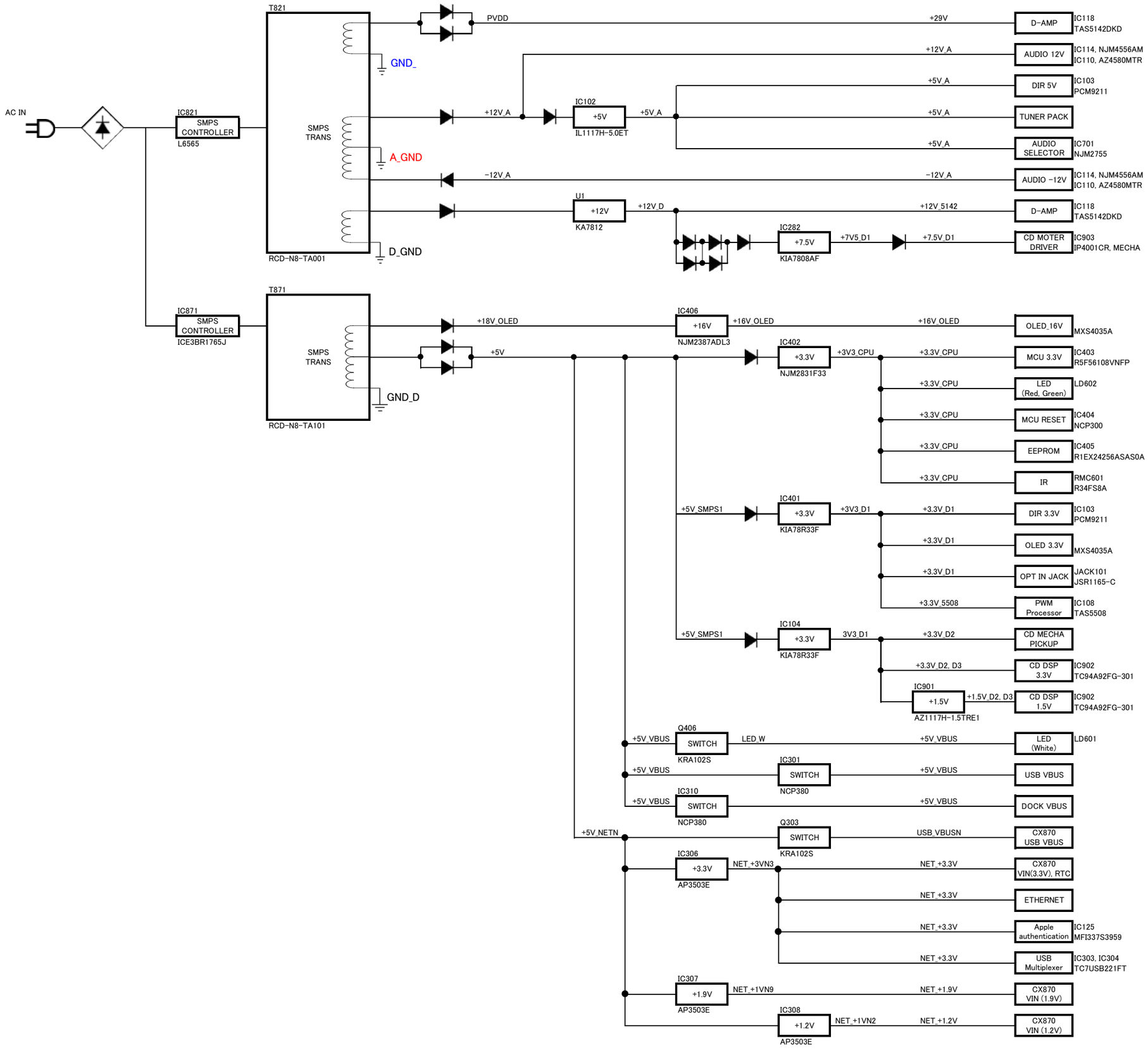

WIRING DIAGRAM

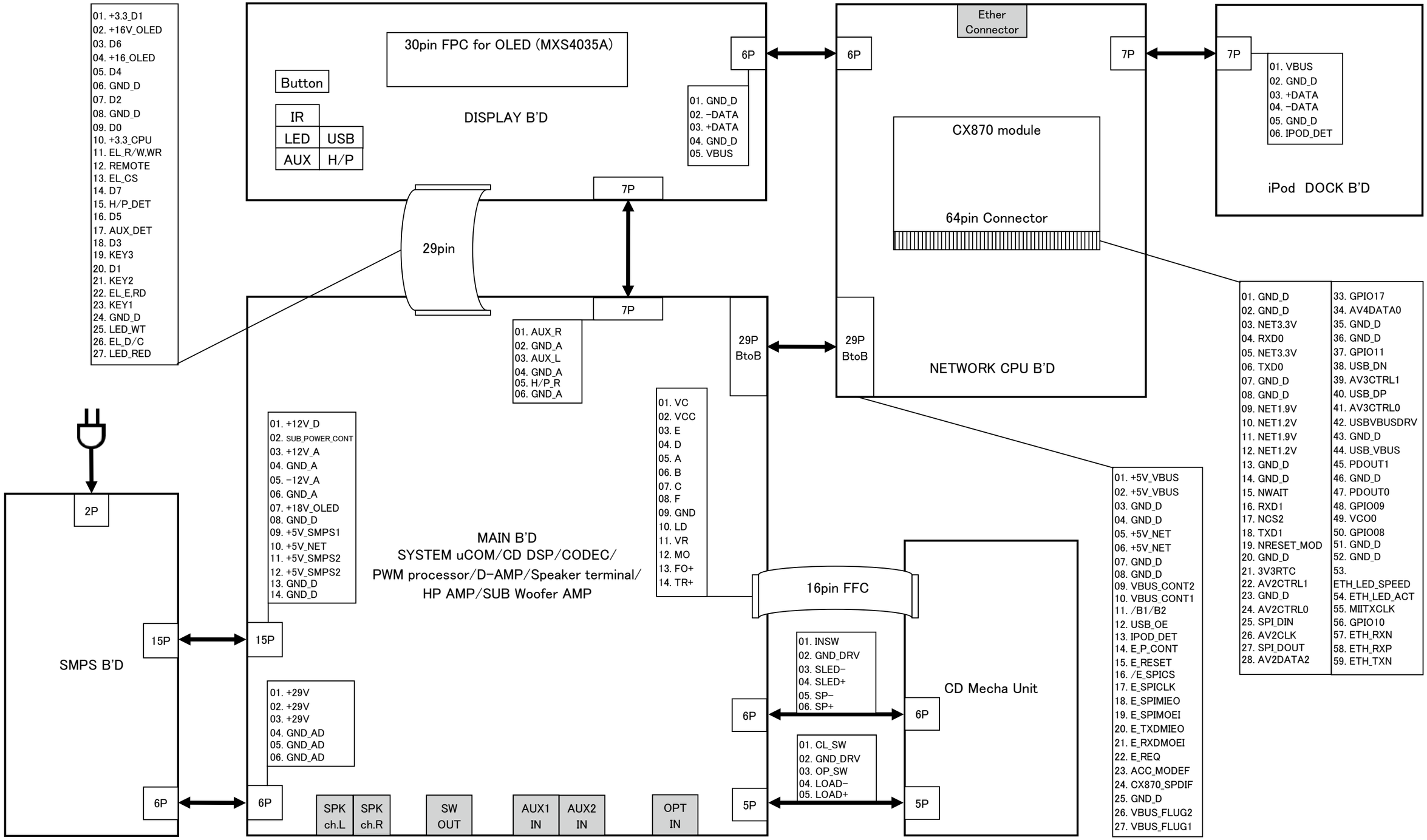

PRINTED WIRING BOARDS

18 17 16 15 14 13 12 11 10 9 8 7 6 5 4 3 2 1

A B C D E F G H I J K L M

FRONT (COMPONENT SIDE)

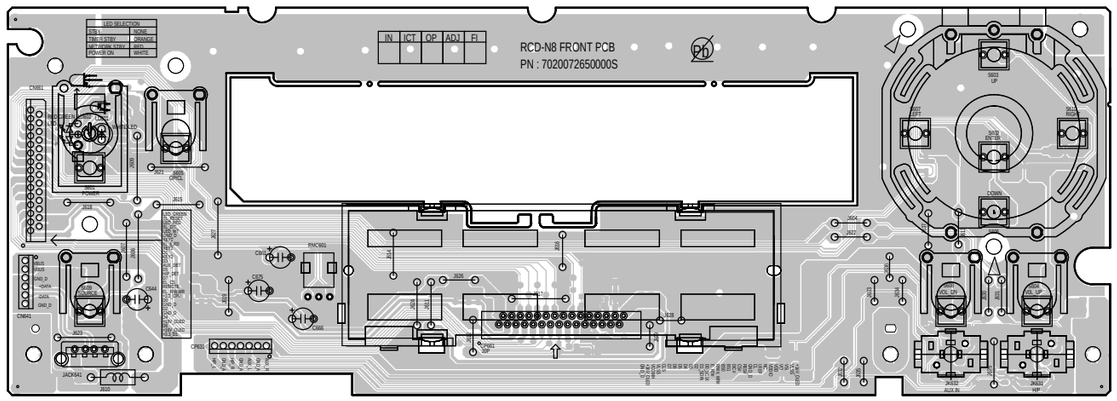

FRONT (FOIL SIDE)

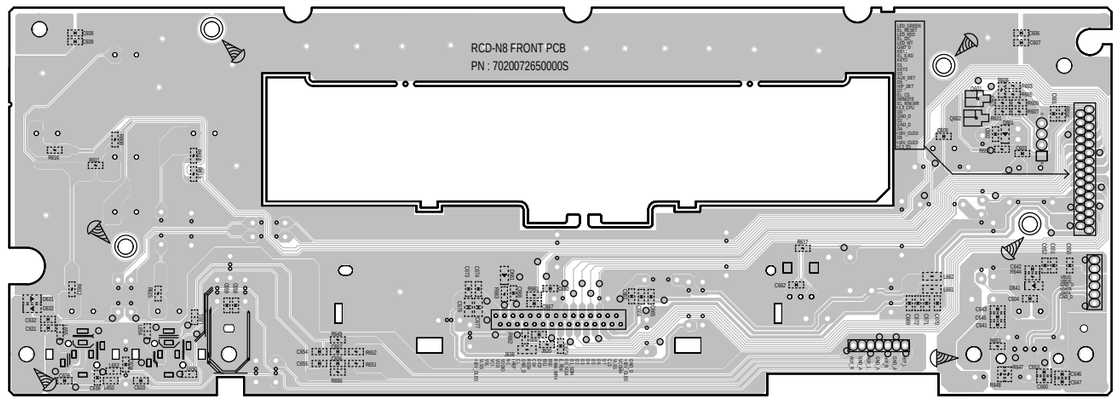

SUP (COMPONENT SIDE)

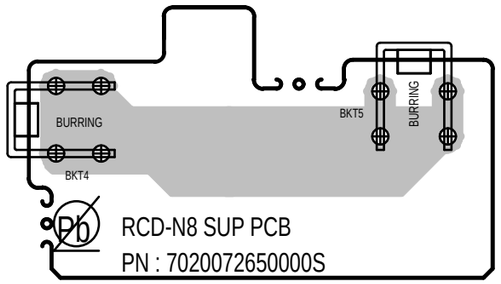

SUP (FOIL SIDE)

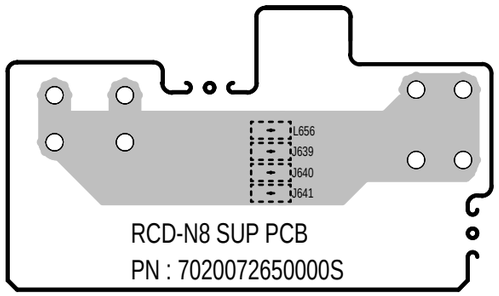

CNT (COMPONENT SIDE)

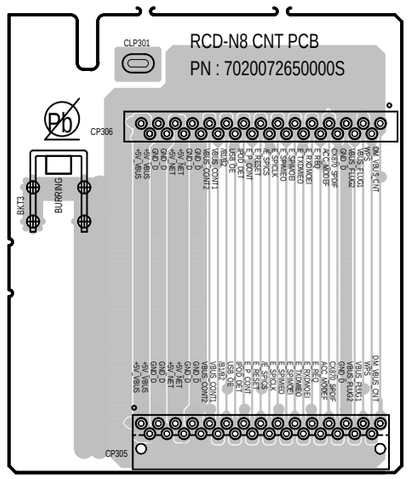

CNT (FOIL SIDE)

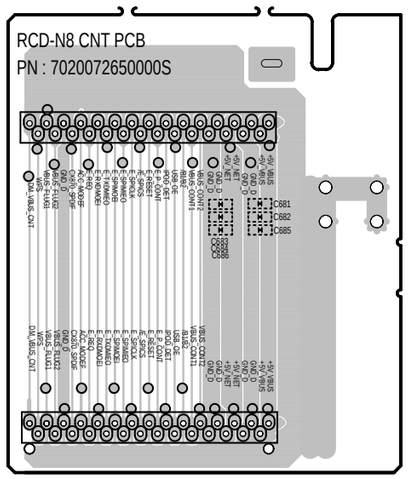

鉛フリー半田
半田付けには、鉛フリー半田 (Sn-Ag-Cu) を使用してください。

Lead-free Solder
When soldering, use the Lead-free Solder (Sn-Ag-Cu).

IPOD
(COMPONENT SIDE)

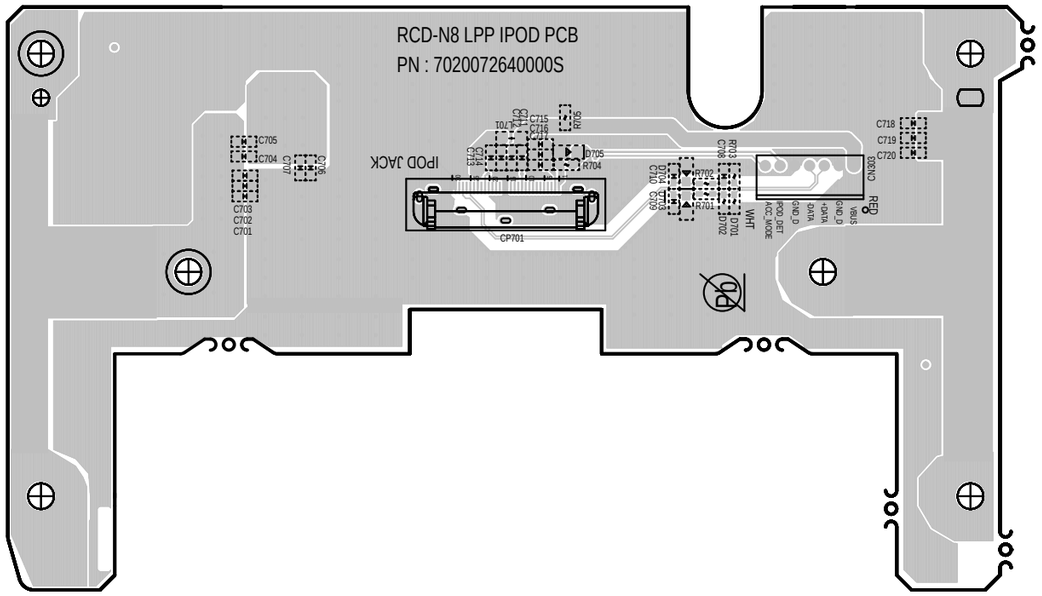

IPOD
(COMPONENT SIDE)

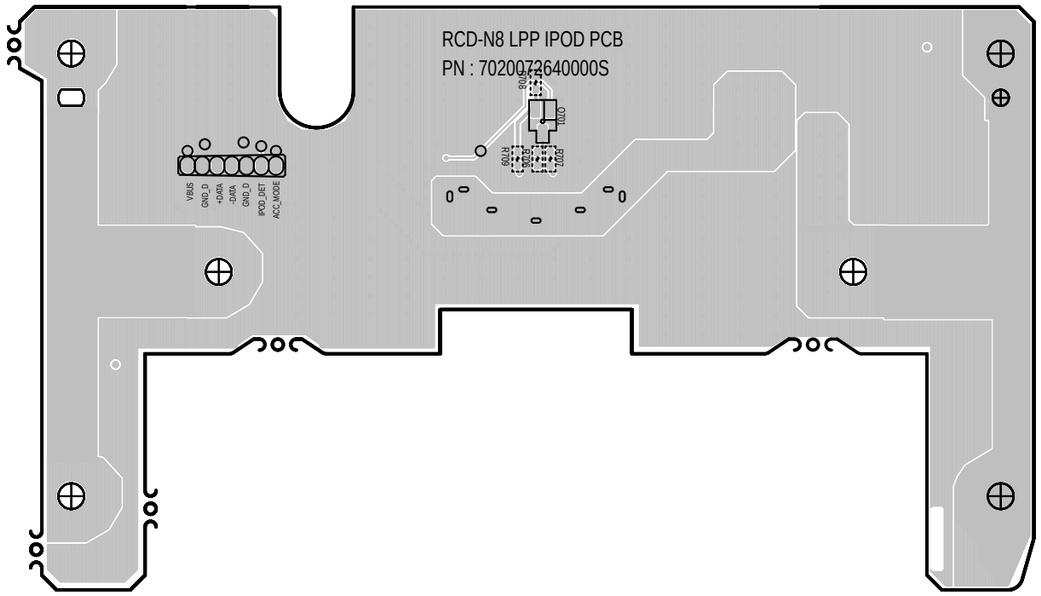

NW
(COMPONENT SIDE)

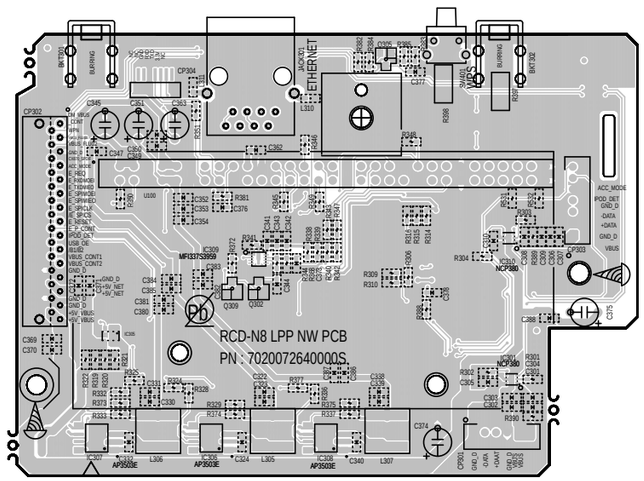

NW
(FOIL SIDE)

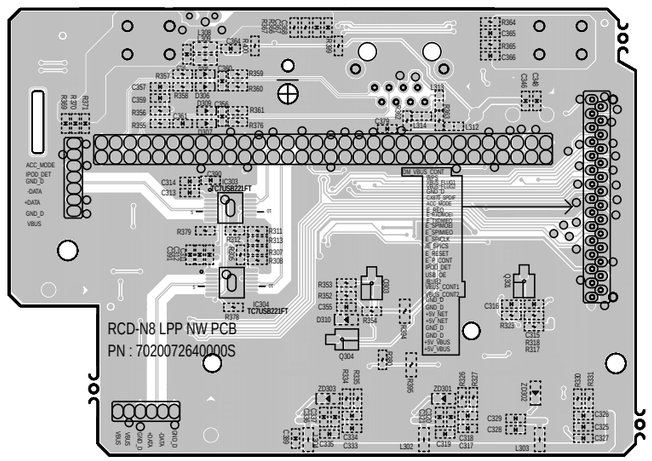

鉛フリー半田
半田付けには、鉛フリー半田 (Sn-Ag-Cu) を使用してください。

Lead-free Solder
When soldering, use the Lead-free Solder (Sn-Ag-Cu).

MAIN
(COMPONENT SIDE)

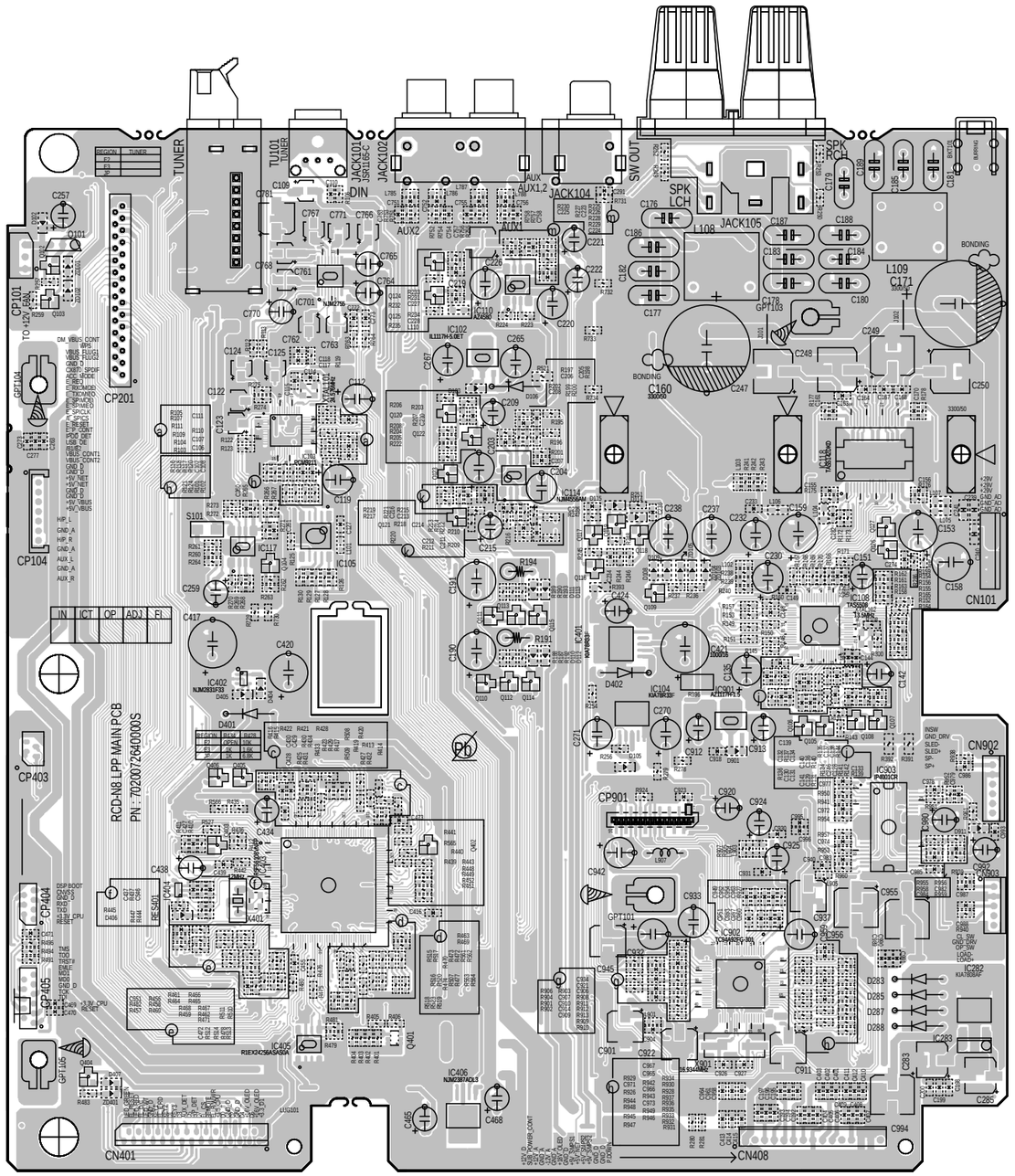

MAIN
(FOIL SIDE)

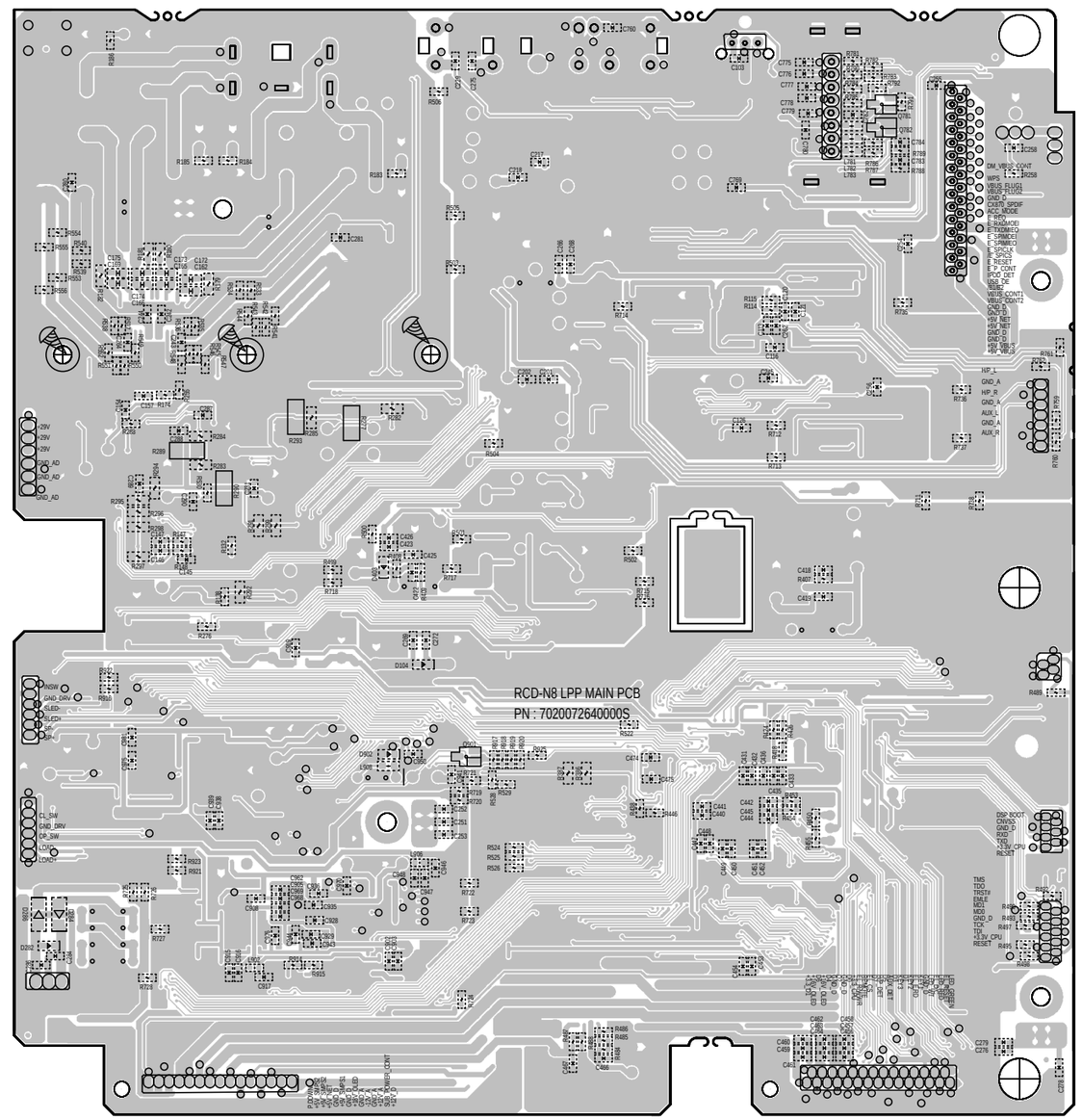

鉛フリー半田
半田付けには、鉛フリー半田 (Sn-Ag-Cu) を使用してください。

Lead-free Solder
When soldering, use the Lead-free Solder (Sn-Ag-Cu).

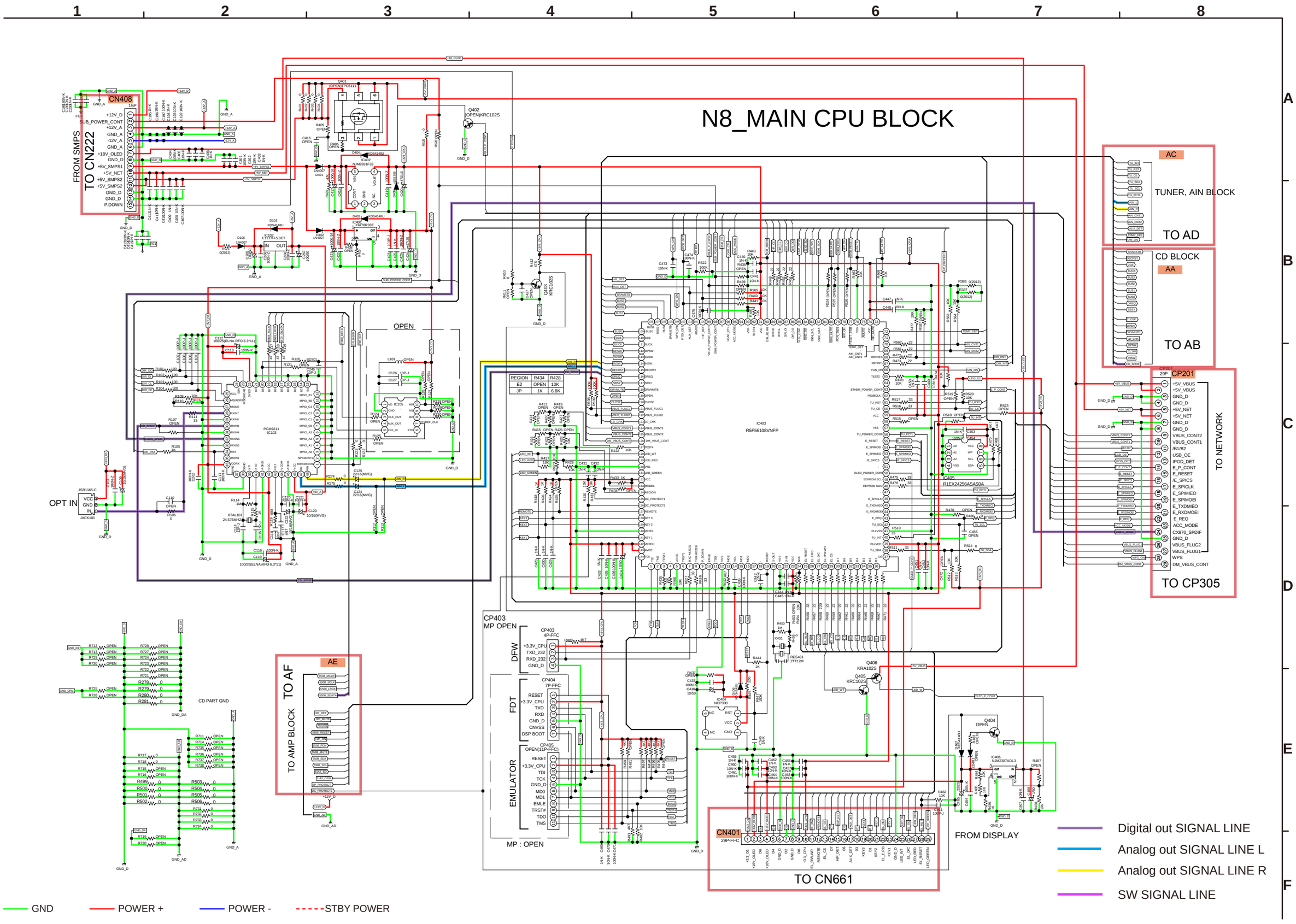

SCHEMATIC DIAGRAMS (1/6)

MAIN CPU BLOCK

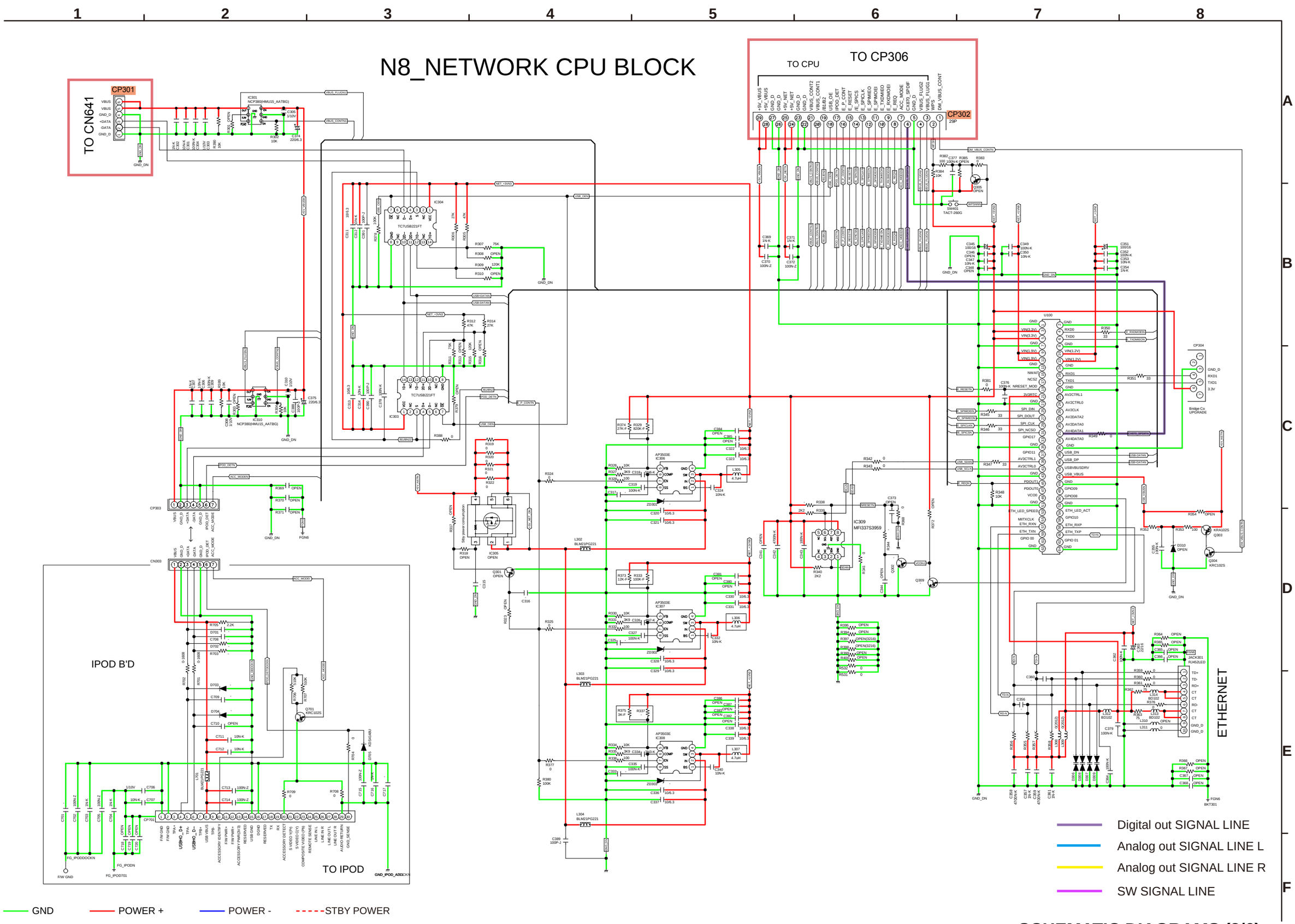

SCHEMATIC DIAGRAMS (2/6)

NETWORK CPU BLOCK

N8_CD BLOCK

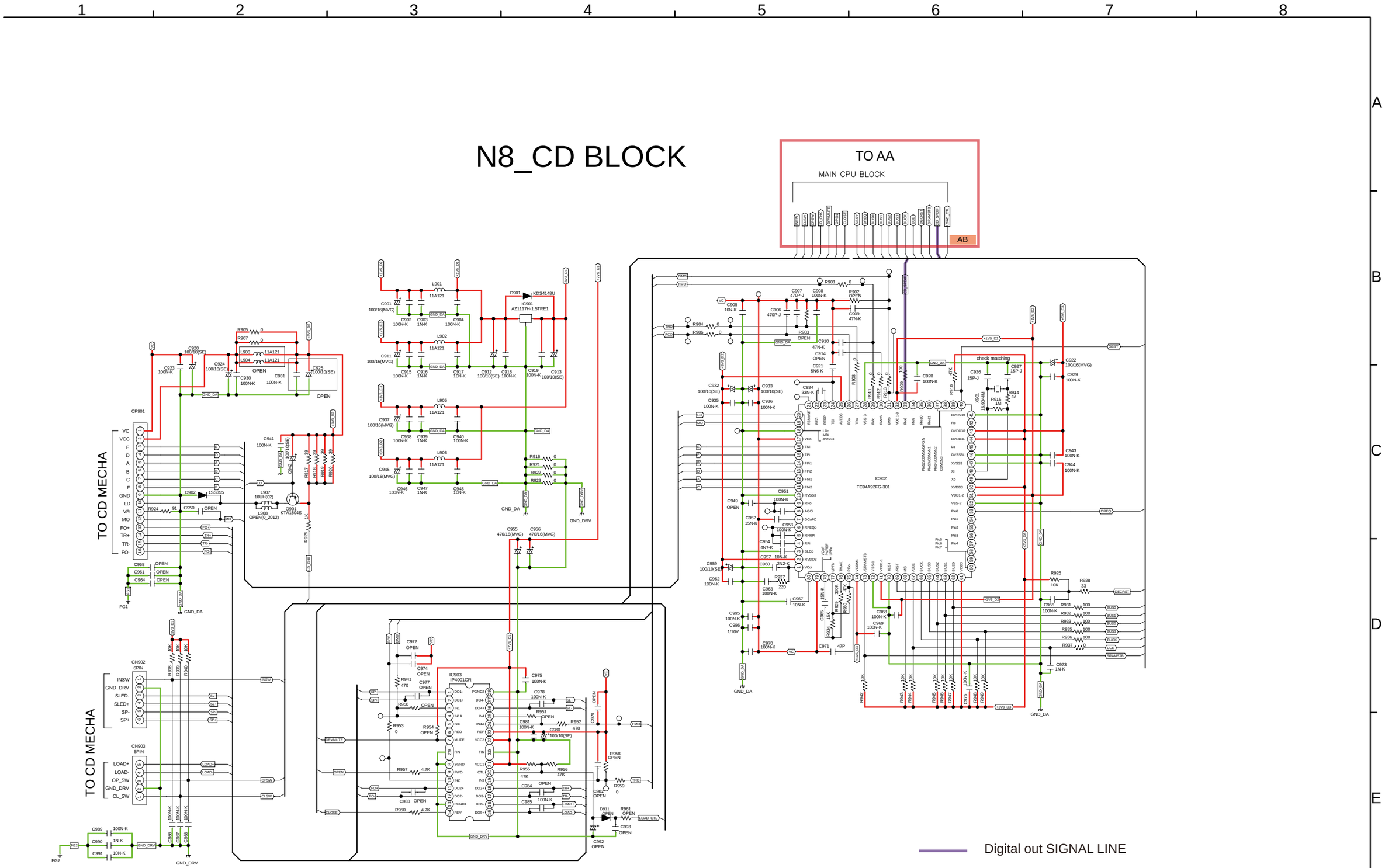

GND POWER + POWER - STBY POWER

SCHEMATIC DIAGRAMS (3/6)

CD BLCK

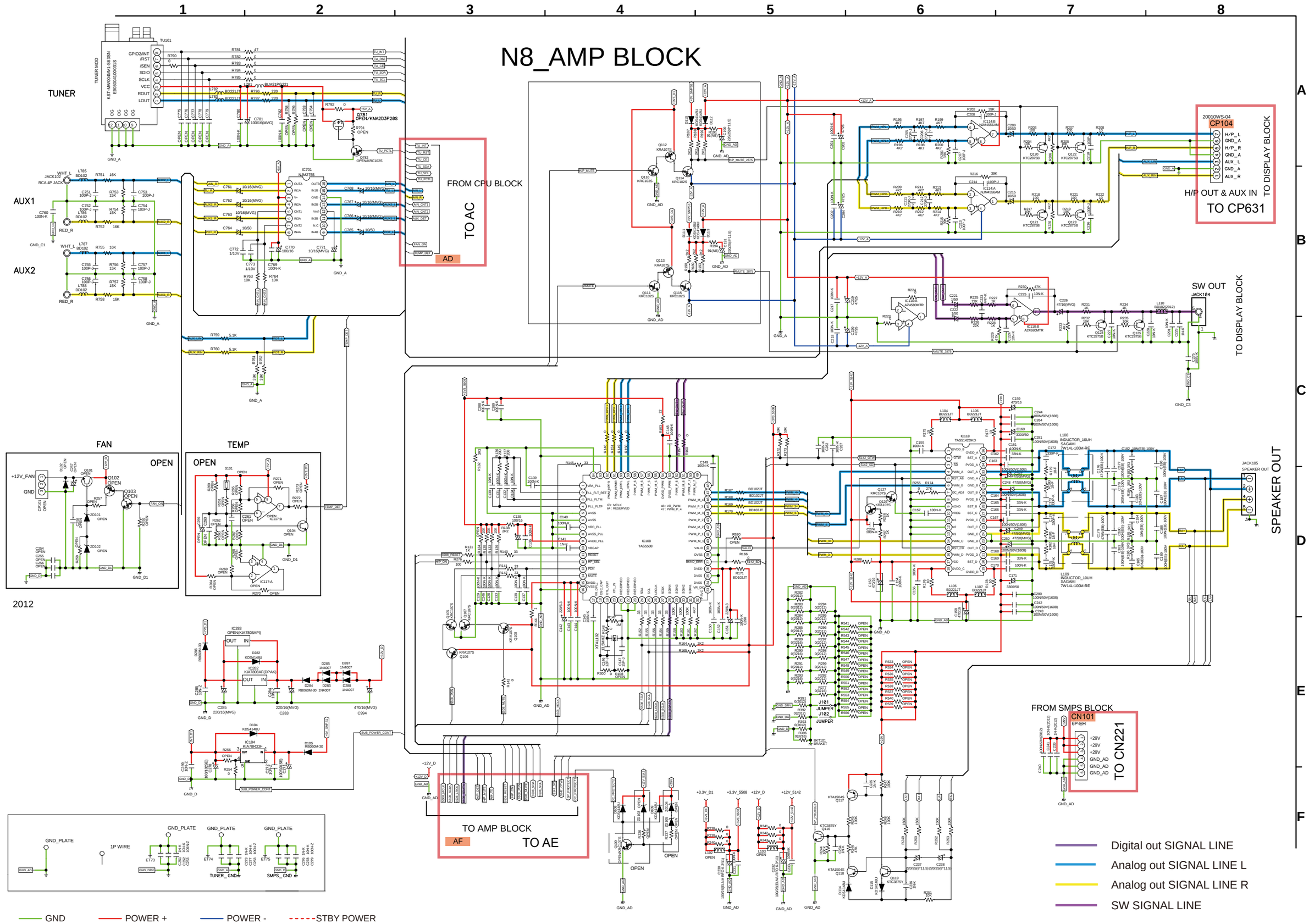

SCHEMATIC DIAGRAMS (6/4)

AMP BLOCK

N8_USB BLOCK

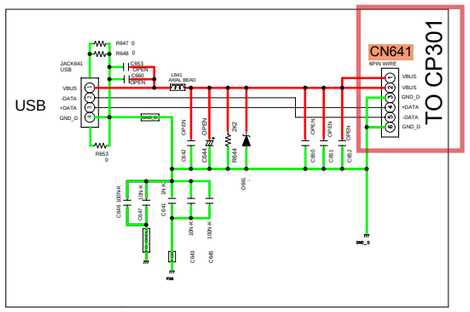

N8_DISPLAY BLOCK

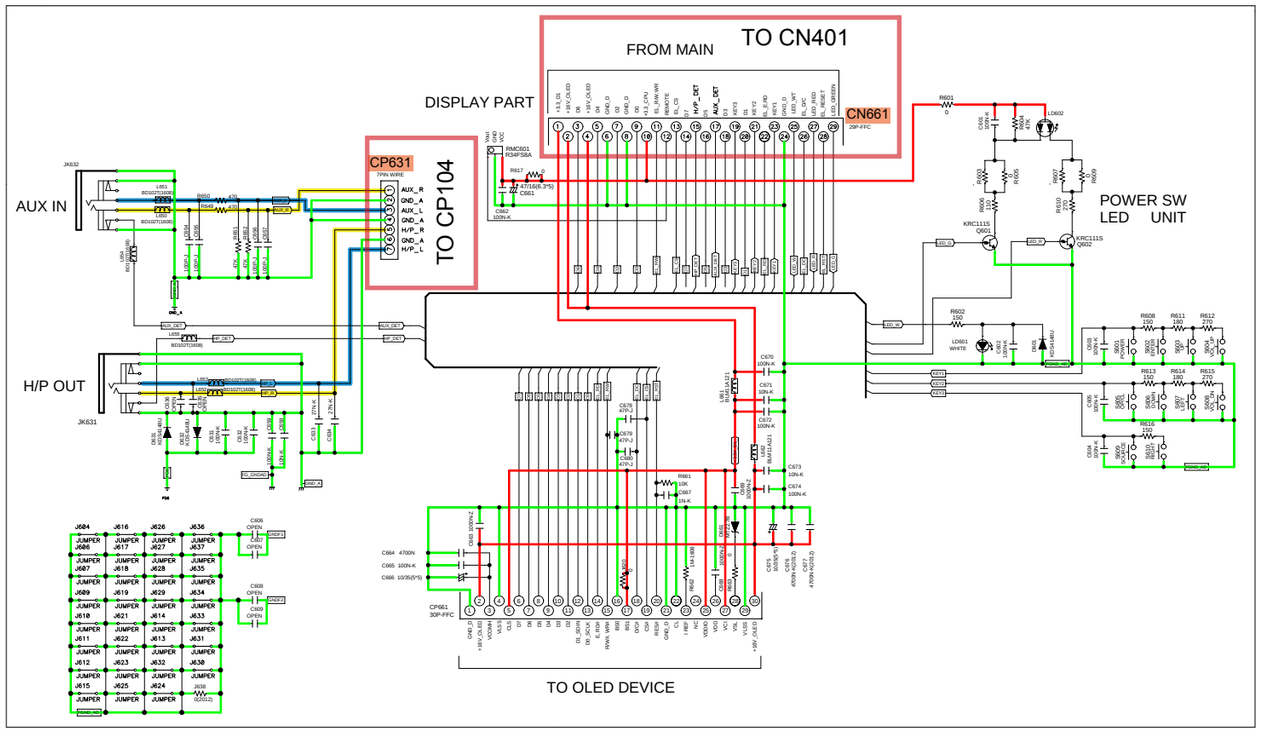

N8_CNT BLOCK

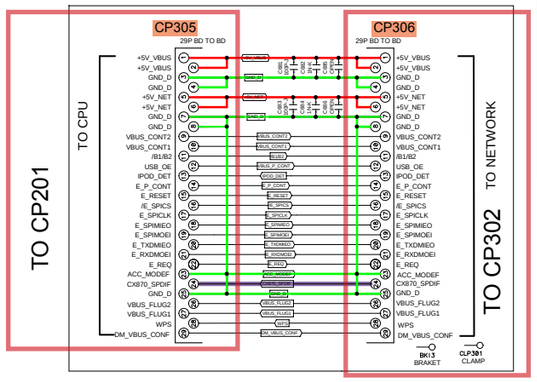

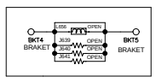

GND POWER + POWER - STBY POWER

Digital out SIGNAL LINE

Analog out SIGNAL LINE L

Analog out SIGNAL LINE R

SCHEMATIC DIAGRAMS (5/6)

USB/CNT/DISPLAY BLOCK

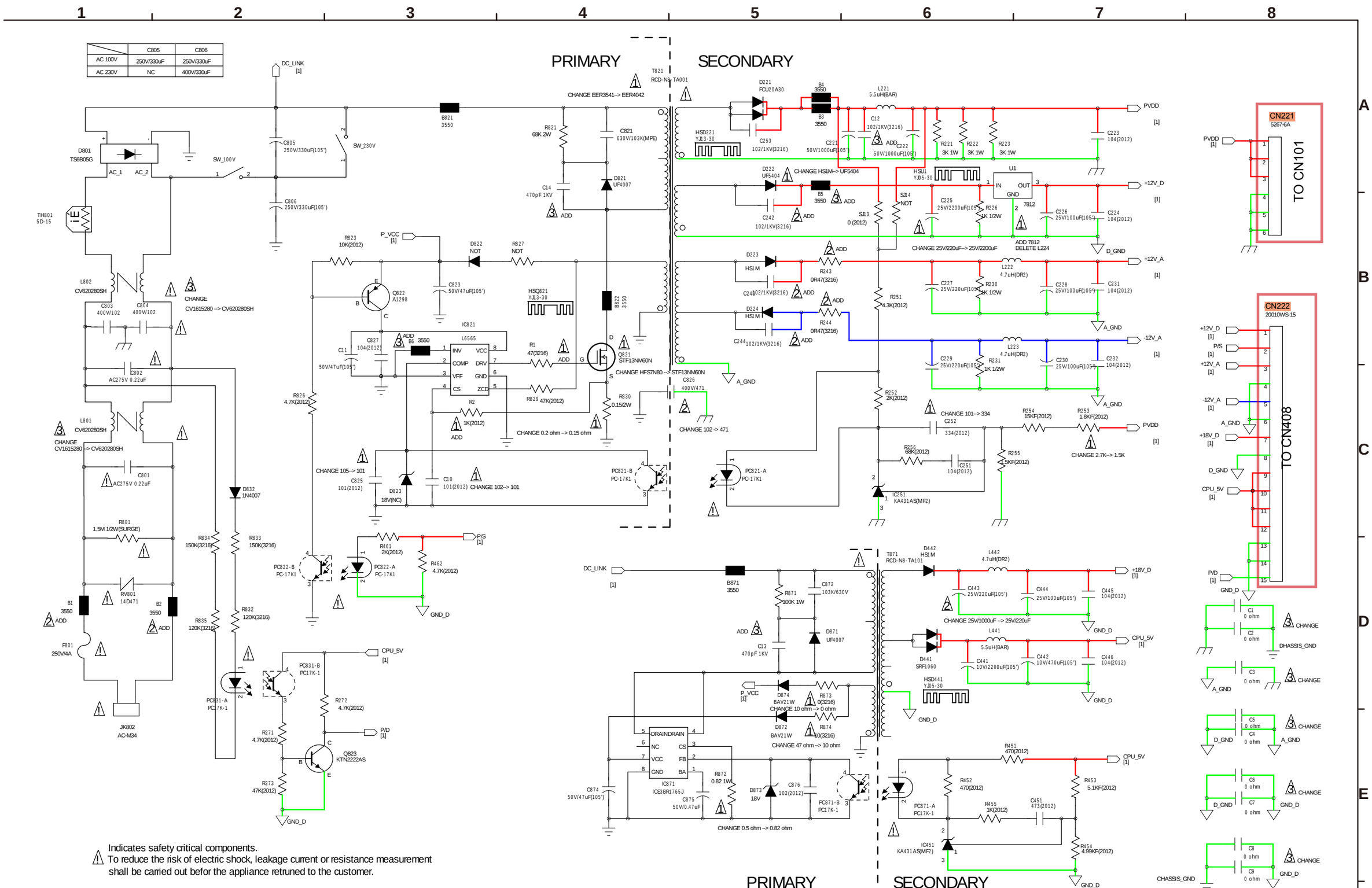

	C805	C806
AC 100V	250V/330uF	250V/330uF
AC 230V	NC	400V/330uF

Indicates safety critical components.
To reduce the risk of electric shock, leakage current or resistance measurement shall be carried out befor the appliance retruned to the customer.

GND — POWER + — POWER - — STBY POWER

SCHEMATIC DIAGRAMS (6/6)
SMPS

EXPLODED VIEW

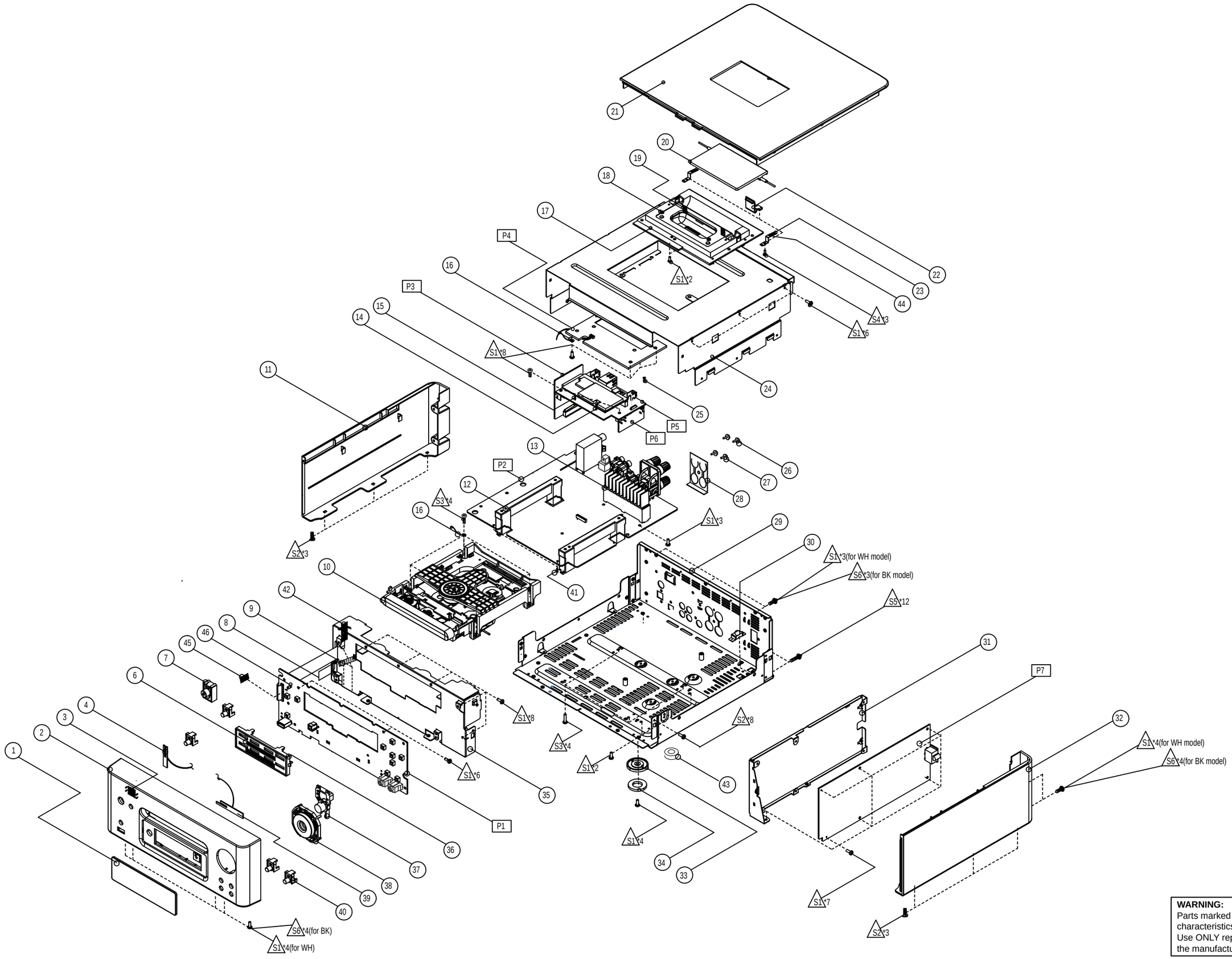

WARNING:
Parts marked with this symbol ⚠ have critical characteristics.
Use ONLY replacement parts recommended by the manufacturer.

EXPLODED VIEW OF CD MECHANISM UNIT

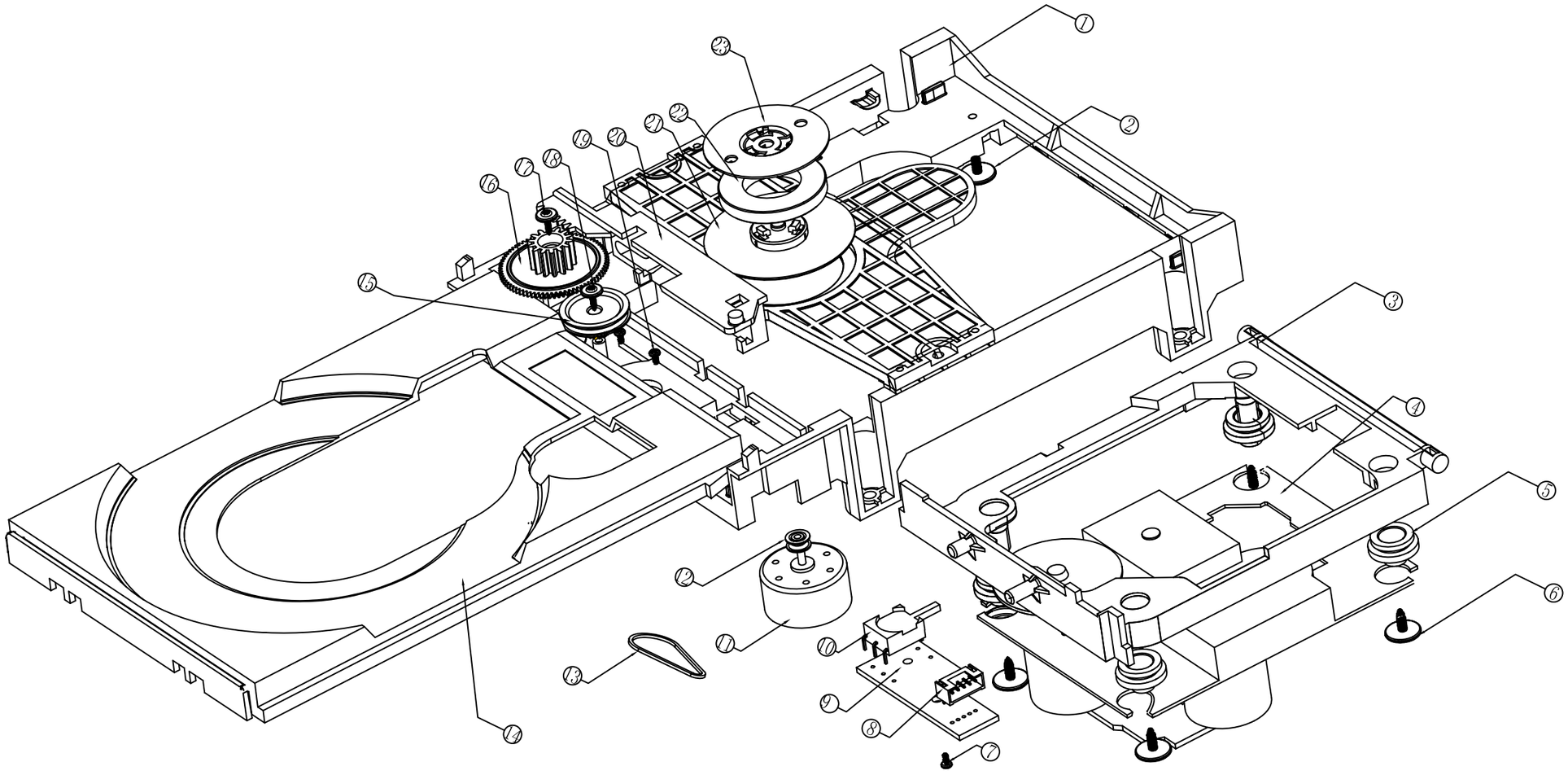

WARNING:
Parts marked with this symbol ⚠ have critical characteristics.
Use ONLY replacement parts recommended by the manufacturer.

PARTS LIST OF EXPLODED VIEW

Please refer to the last chapter.

✻Parts for which "nsp" is indicated on this table cannot be supplied.

✻P.W.B. ASS'Y for which "nsp" is indicated on this table cannot be supplied. When repairing the P.W.B. ASS'Y, check the board parts table and order replacement parts.

✻The parts listed below are for maintenance only, might differ from the parts used in the unit in appearances or dimensions

✻Part indicated with the mark " ★ " is not illustrated in the exploded view.

Personal notes:

PARTS LIST OF CD MECHANISM UNIT

Please refer to the last chapter.

∗Parts indicated by "nsp" on this table cannot be supplied.

∗Parts indicated by the " ★ " mark are not illustrated in the exploded view.

∗The parts listed below are only for maintenance. Therefore they might differ from the parts used in the unit in appearances or dimensions.

Personal notes:

PACKING VIEW

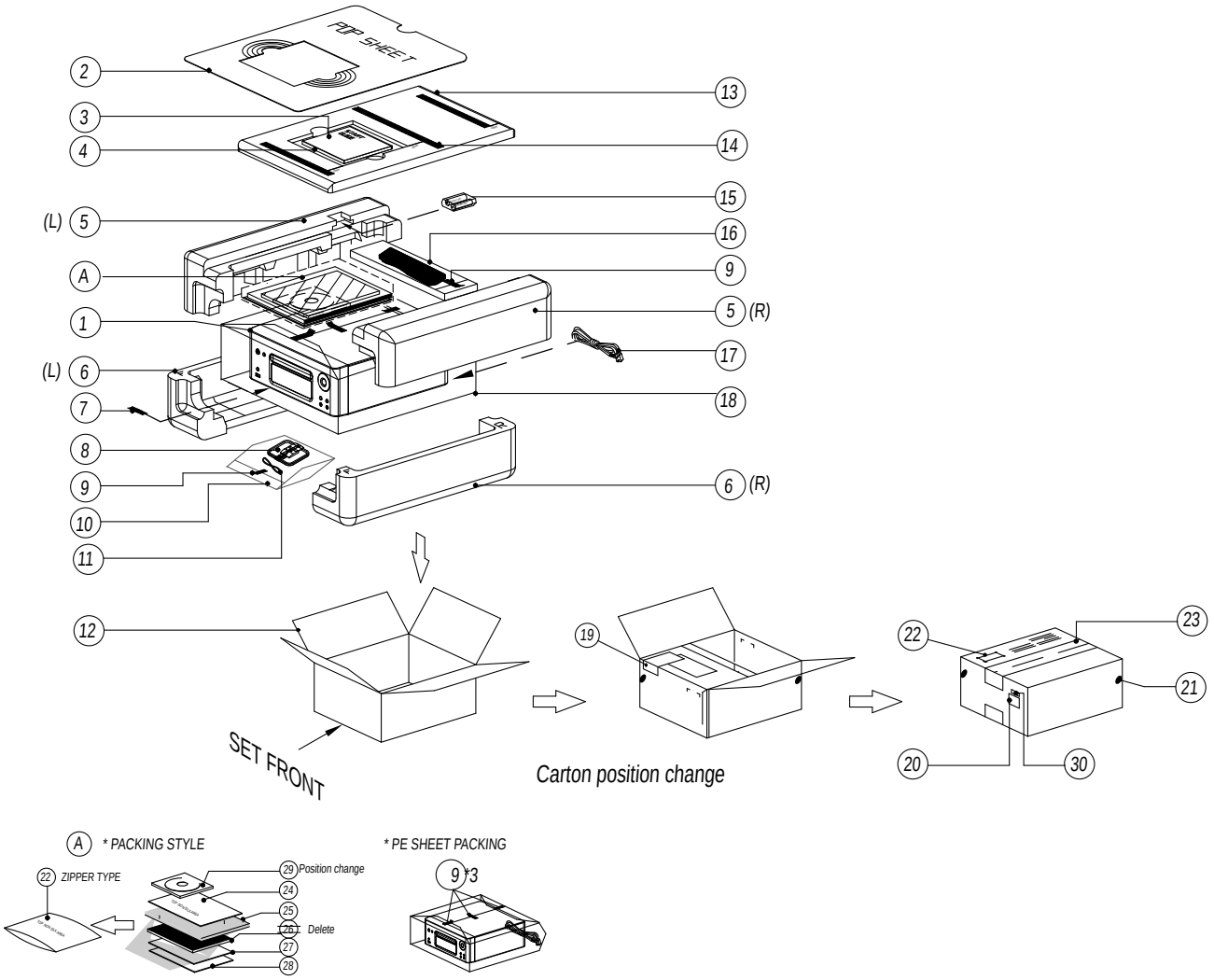

PARTS LIST OF PACKING & ACCESSORIES

Please refer to the last chapter.

∗Parts for which "nsp" is indicated on this table cannot be supplied.

∗The parts listed below are for maintenance only, might differ from the parts used in the unit in appearances or dimensions.

Personal notes:

SEMICONDUCTORS

Only major semiconductors are shown, general semiconductors etc. are omitted to list.
The semiconductor which described a detailed drawing in a schematic diagram are omitted to list.

1. IC's

R5F56108VNFP (MAIN : IC403)

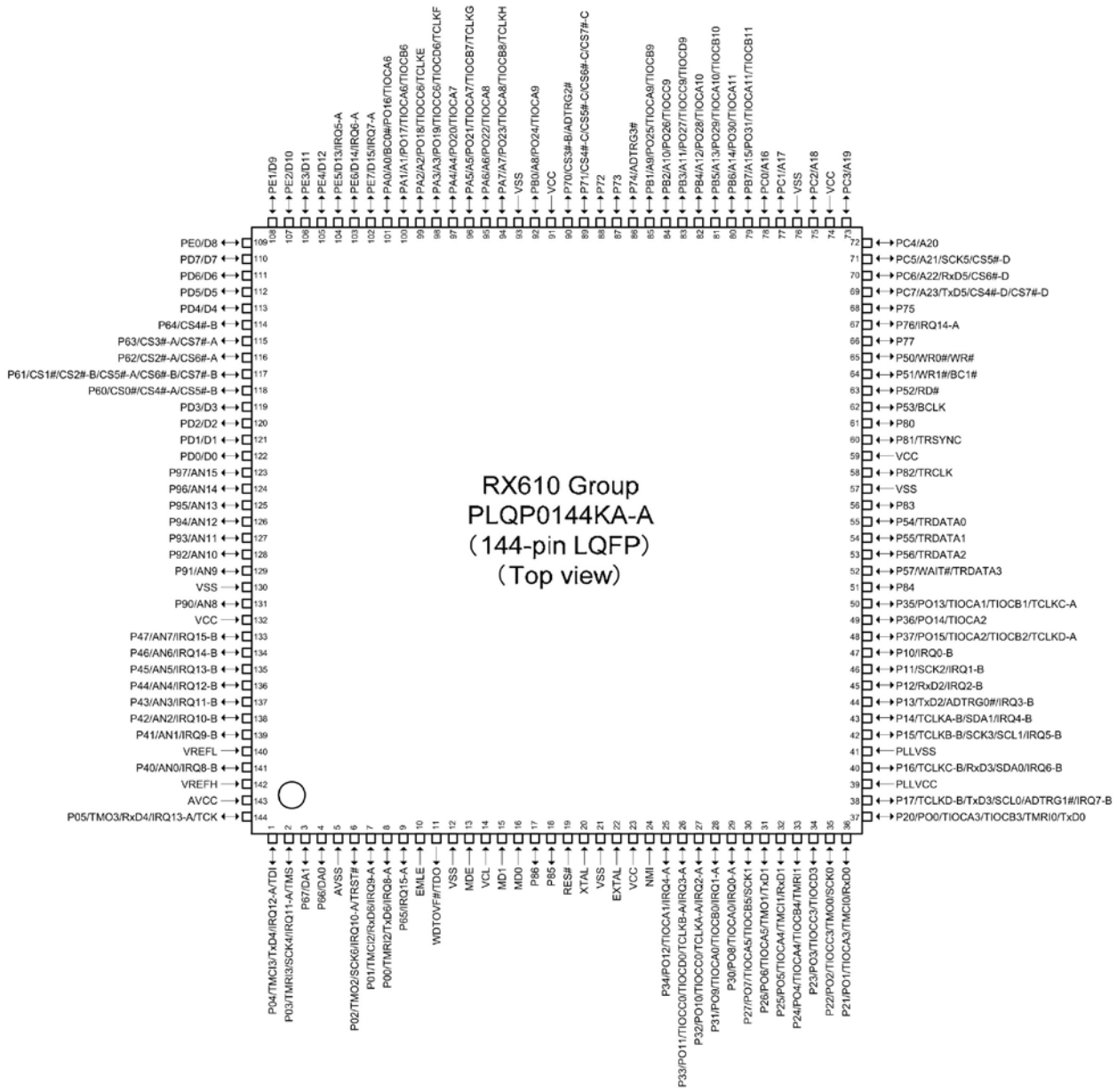

R5F56108VNFP (MAIN : IC403) Terminal Function

Pin No	Pin Name	Port Name	PD/PU	I/O	STBY	Network STBY	Eco STBY	Note
1	P04	TDI	PU	I	I	I	I	Emulator Connection terminal
2	P03	TMS	PU	I	I	I	I	Emulator Connection terminal
3	P67	TEST1	PD	I	I	I	I	Boot for Check PCB mode
4	P66	B_POWER_ON/ OFF	PD	O	O/L	O/L	O/L	OPEN
5	AVSS	AVSS	-	-	-	-	-	GND
6	P02	TRST#	PD	I	I	I	I	Emulator Connection terminal
7	P01	RXD MI232O	PU	O	O/L	O/L	O/L	UPDATE
8	P00	TXD MO232I	-	O	O/L	O/L	O/L	UPDATE
9	P65	P.Down	PU	I	I	I	I	P.Down Detect(INT)
10	EMLE	EMLE	PD	I	I	I	I	Emulator Connection terminal
11	WDTOVF#	TDO	PU_OPEN	O	O/L	O/L	O/L	Emulator Connection terminal
12	VSS	VSS	-	-	-	-	-	GND
13	MDE	MDE	PD	I	I	I	I	Operation Mode Setting
14	VCL	VCL	-	I	I	I	I	Smoothing capacitor (0.1uF) connection terminal
15	MD1	MD1	PU	I	I	I	I	Emulator Connection terminal
16	MD0	MD0	PU	I	I	I	I	Emulator Connection terminal
17	P86	OPEN	-	O	O/L	O/L	O/L	OPEN
18	P85	OPEN	-	O	O/L	O/L	O/L	OPEN
19	RES#	RESET	PU	I	I	I	I	Reset
20	XTAL	X-OUT	-	-	-	-	-	Clock Output (12MHz)
21	VSS	VSS	-	-	-	-	-	GND
22	EXTAL	X-IN	-	-	-	-	-	Clock Input (12MHz)
23	VCC	VCC	-	-	-	-	-	+3.3V_CPU
24	NMI	NMI	PU	I	I	I	I	Basic Functions of Microcomputer
25	P34	EL RESET	PD	O	O/L	O/L	O/L	Reset for OLED ("L": Reset)
26	P33	EL E,RD	-	O	O/L	O/L	O/L	EL Readout
27	P32	EL D/C	-	O	O/L	O/L	O/L	Switching Data/Commando ("H" : Data, "L" : Command)
28	P31	EL R/W,WR	-	O	O/L	O/L	O/L	EL Writing
29	P30	EL CS	-	O	O/L	O/L	O/L	EL Chip Select ("L" : I/F communication)
30	P27	D7	-	O	O/L	O/L	O/L	Data Bus for OLED
31	P26	D6	-	O	O/L	O/L	O/L	Data Bus for OLED
32	P25	D5	-	O	O/L	O/L	O/L	Data Bus for OLED
33	P24	D4	-	O	O/L	O/L	O/L	Data Bus for OLED
34	P23	D3	-	O	O/L	O/L	O/L	Data Bus for OLED
35	P22	D2	-	O	O/L	O/L	O/L	Data Bus for OLED
36	P21	D1	-	O	O/L	O/L	O/L	Data Bus for OLED
37	P20	D0	-	O	O/L	O/L	O/L	Data Bus for OLED
38	P17	TU_SDA	PU	O	O/L	O/L	O/L	Data for TUNER (I2C)
39	PLLVCC	PLLVCC	-	-	-	-	-	+3.3V_CPU
40	P16	TU_INT	-	I	I	I	I	TUNER Interrupt
41	PLLVSS	PLLVSS	-	-	-	-	-	GND
42	P15	TU_SCL	PU	O	O/L	O/L	O/L	Clock for TUNER (I2C)
43	P14	E_REQ	PD	I	I	I	I	DM870 Interrupt
44	P13	E_RXDMOEI	PU(CX870)	SO	O/L	O/L	O/L	Network Serial Data input (DM870 RXD)
45	P12	E_TXDMIEO	PU(CX870)	SI	O/L	I	O/L	Network Serial Data Output (DM870 TXD)
46	P11	E_SPICLK	PU(CX870)	O	O/L	O/L	O/L	Clock for ETHERNET
47	P10	OPEN	-	O	O/L	O/L	O/L	OPEN
48	P37	EEPROM SDA	PU	I/O	I	I	I	EEPROM (R1EX24256A) Control
49	P36	EEPROM SCL	PU	O	I	I	I	EEPROM (R1EX24256A) Control

Pin No	Pin Name	Port Name	PD/PU	I/O	STBY	Network STBY	Eco STBY	Note
50	P35	OLED_Power_ Cont	PD	O	O/L	O/L	O/L	Power Control for OLED +18V
51	P84	4683_INT	-	O	O/L	O/L	O/L	OPEN
52	P57	/E_SPICS	PU(CX870)	O	O/L	O/L	O/L	SCI or CS Signal Output to the DM870
53	P56	E_SPIMIEO	PU(CX870)	I	I	I	I	Data for ETHERNET
54	P55	E_SPIMOEI	PU(CX870)	O	O/L	O/L	O/L	Data for ETHERNET
55	P54	E_RESET	PU(CX870)	O	O/L	O/L	O/L	Reset for DM870 ("H" input set)
56	P83	TUNER_Power_ Cont	PD_OPEN	O	O/L	O/L	O/L	Power Control for Tuner : Unused ("L" input set)
57	VSS	VSS	-	-	-	-	-	GND
58	P82	OPEN	-	O	O/L	O/L	O/L	OPEN
59	VCC	VCC	-	-	-	-	-	+3.3V_CPU
60	P81	TU_CE	-	O	O/L	O/L	O/L	Tuner Control (CE)
61	P80	TU_RST	PU	O	O/L	O/L	O/L	Reset Tuner
62	P53	SP_PROTECT	PU	I	I	I	I	DC Power Down Detect (SPK)
63	P52	Ether_Power _ Cont	PD	O	O/L	O/L	O/L	Power Control for ETHERNET
64	P51	4683_CDTI	-	O	O/L	O/L	O/L	OPEN
65	P50	TEST2	PD	I	I	I	I	Boot for Check PCB mode
66	P77	FAN ON	-	O	O/L	O/L	O/L	FAN Control
67	P76	DIR_INT	PD(DIR_ RERR) と共通	I	I	I	I	PCM9211(DIR) Control
68	P75	DIR_RST	PD	O	O/L	O/L	O/L	PCM9211(DIR) Control
69	PC7	AIN_CNT2	-	O	O/L	O/L	O/L	Input Switching Control for Analog IN 2
70	PC6	AIN_CNT1	-	O	O/L	O/L	O/L	Input Switching Control for Analog IN 1
71	PC5	OPEN	-	O	O/L	O/L	O/L	OPEN
72	PC4	TEMP_DET	-	O	O/L	O/L	O/L	OPEN
73	PC3	/H/P_MUTE	PD	O	O/L	O/L	O/L	H/P MUTE ("L":MUTE, "H": PLAY)
74	VCC	VCC	-	-	-	-	-	+3.3V_CPU
75	PC2	AMUTE	PD	O	O/L	O/L	O/L	SW MUTE
76	VSS	VSS	-	-	-	-	-	GND
77	PC1	/5508_RESET	PU	O	O/L	O/L	O/L	TAS5508 System Reset Input (11 pin)
78	PC0	/H/P_ON	PU	O	O/L	O/L	O/L	TAS5508 Headphone In/Out Selector (12 pin)
79	PB7	/5508_PDN	PU(DTA)	O	O/L	O/L	O/L	TAS5508 Power Down (12 pin)
80	PB6	/5508_MUTE	PU(DTA)	O	O/L	O/L	O/L	TAS5508 Soft Mute of Outputs (14 pin)
81	PB5	OPEN	-	O	O/L	O/L	O/L	OPEN
82	PB4	5508_SDA	PU	I/O	I	I	I	TAS5508 I2C Serial-Control Data-Interface Input/Output (24 pin)
83	PB3	5508_SCL	PU	I/O	I	I	I	TAS5508 I2C Serial (25 pin)
84	PB2	/5142_SD	PU	I	I	I	I	TAS5142 Shutdown Signal
85	PB1	/5142_OTW	PU	I	I	I	I	TAS5142 Overtemperature Warning Signal
86	P74	DIR_DO	-	I	I	I	I	PCM9211(DIR) Control
87	P73	DIR_DI	-	O	O/L	O/L	O/L	PCM9211(DIR) Control
88	P72	DIR_CL	-	O	O/L	O/L	O/L	PCM9211(DIR) Control
89	P71	DIR_CE	-	O	O/L	O/L	O/L	PCM9211(DIR) Control
90	P70	DIR_RERR	PD	I	I	I	I	PCM9211(DIR) Control
91	VCC	VCC	-	-	-	-	-	+3.3V_CPU
92	PB0	TEST3	PD	I	I	I	I	Boot for Check PCB mode
93	VSS	VSS	-	-	-	-	-	GND
94	PA7	OPEN	-	O	O/L	O/L	O/L	OPEN
95	PA6	OPEN	-	O	O/L	O/L	O/L	OPEN
96	PA5	OPEN	-	O	O/L	O/L	O/L	OPEN
97	PA4	USB_OE	-	O	O/L	O/L	O/L	Mute Control When Switching USB Route (Spare)

Pin No	Pin Name	Port Name	PD/PU	I/O	STBY	Network STBY	Eco STBY	Note
98	PA3	SUB_Power_Cont	PD	O	O/L	O/L	O/L	Power Control (+3.3V_D1 / +12V_A)
99	PA2	VBUS_Power_ Cont	PD_OPEN	O	O/L	O/L	O/L	Unused ("L" input set)
100	PA1	HP/DET	PU	I	I	I	I	H/P detect
101	PA0	/B1/B2	PD	O	O/L	O/L	O/L	Route Selection of Front USB and iPod Dock ("L": Dock, "H": Front USB)
102	PE7	AUX_DET	PU	I	I	I	I	Portable IN detect
103	PE6	DOCK_DET	PU	I	I	I	I	iPod Dock Detect
104	PE5	WPS	PU	I	I	I	I	WPS start("L" continued for 3 seconds)
105	PE4	SRAMSTB	PU	O	O/L	O/L	O/L	SRAMSTB Control for CD DSP
106	PE3	BUS3	PU	I/O	O/L	O/L	O/L	CD DSP (TC94A92FG) Control
107	PE2	BUS2	PU	I/O	O/L	O/L	O/L	CD DSP (TC94A92FG) Control
108	PE1	BUS1	PU	I/O	O/L	O/L	O/L	CD DSP (TC94A92FG) Control
109	PE0	BUS0	PU	I/O	O/L	O/L	O/L	CD DSP (TC94A92FG) Control
110	PD7	CCE	PU	O	O/L	O/L	O/L	CD DSP Control (Chip Enable)
111	PD6	BUCK	PU	O	O/L	O/L	O/L	CD DSP Control (BUS CLK)
112	PD5	OPSW	PU	I	I	I	O/L	Open SW from CD Mecha
113	PD4	CLSW	PU	I	I	I	O/L	Close SW from CD Mecha
114	P64	INSW	PU	I	I	I	O/L	Limit SW from CD Mecha
115	P63	DECRST	PU	O	O/L	O/L	O/L	Reset for CD DSP (TC94A92FG)
116	P62	DREQ	-	I	I	I	O/L	CD DSP (TC94A92FG) DREQ
117	P61	SBSY	PU	I	I	I	O/L	CD Monitor (Default: SBSY) from CD DSP (TC94A92FG)
118	P60	DRVMUTE	PU_OPEN	O	O/L	O/L	O/L	CD Driver Mute ("H": Mute Off, "L": Mute On)
119	PD3	CD_OPEN	-	O	O/L	O/L	O/L	Open CD Tray
120	PD2	CD_CLOSE	-	O	O/L	O/L	O/L	Close CD Tray
121	PD1	VBUS_FLUG1	PU	I	I	I	I	Check VBUS Voltage 1 (Front USB), "L" : Error
122	PD0	VBUS_FLUG2	PU	I	I	I	I	Check VBUS Voltage 2 (iPod Dock), "L" : Error
123	P97	LD_CHK	AD	I	I	I	O/L	Check CD Laser Diode Current
124	P96	VBUS_CTL1	PD	O	O/L	O/L	O/L	VBUS Control 1 (Front USB)
125	P95	VBUS_CTL2	PD	O	O/L	O/L	O/L	VBUS Control 2 (iPod DOCK)
126	P94	DM_VBUS_ CONT	PD	O	O/L	O/L	O/L	DM870 VBUS Control
127	P93	TEST4	PD	I	I	I	I	Boot for Check PCB mode
128	P92	LED_WT	PU	O	O/L	O/L	O/L	Control White LED (POWER ON : "H")
129	P91	LED_RED	PD	O	O/H	O/H	O/L	Control Red LED (ECO-STBY : "L")
130	VSS	VSS	-	-	-	-	-	GND
131	P90	LED_GREEN	PD	O	O/L	O/H	O/L	Control Green LED (ECO-STBY : "L")
132	VCC	VCC	-	-	-	-	-	+3.3V_CPU
133	P47	MODEL	AD	I	I	I	I	Model Select ("L": N5, "H": N8)
134	P46	REGION	AD	I	I	I	I	Region Select ("0V": E2/H, "3.3V": E3/MID, "1.5V": JP)
135	P45	DC Protect 1	PU	I	I	I	I	Power Down Detect : Unused (H input set)
136	P44	DC Protect 2	PU	I	I	I	I	Power Down Detect
137	P43	REMOTE	PU(OPEN)	I	I	I	I	Remote Input
138	P42	KEY3	PU	I	I	I	I	Key Input 3 (A/D Port)
139	P41	KEY2	PU	I	I	I	I	Key Input 2 (A/D Port)
140	VREFL	VREFL	-	-	-	-	-	GND
141	P40	KEY1	PU	I	I	I	I	Key Input 1 (A/D Port)
142	VREFH	VREFH	-	-	-	-	-	+3.3V_CPU
143	AVCC	AVCC	-	-	-	-	-	+3.3V_CPU
144	P05	TCK	PU	I	I	I	I	Emulator Connection terminal

TC94A92FG (MAIN : IC902)

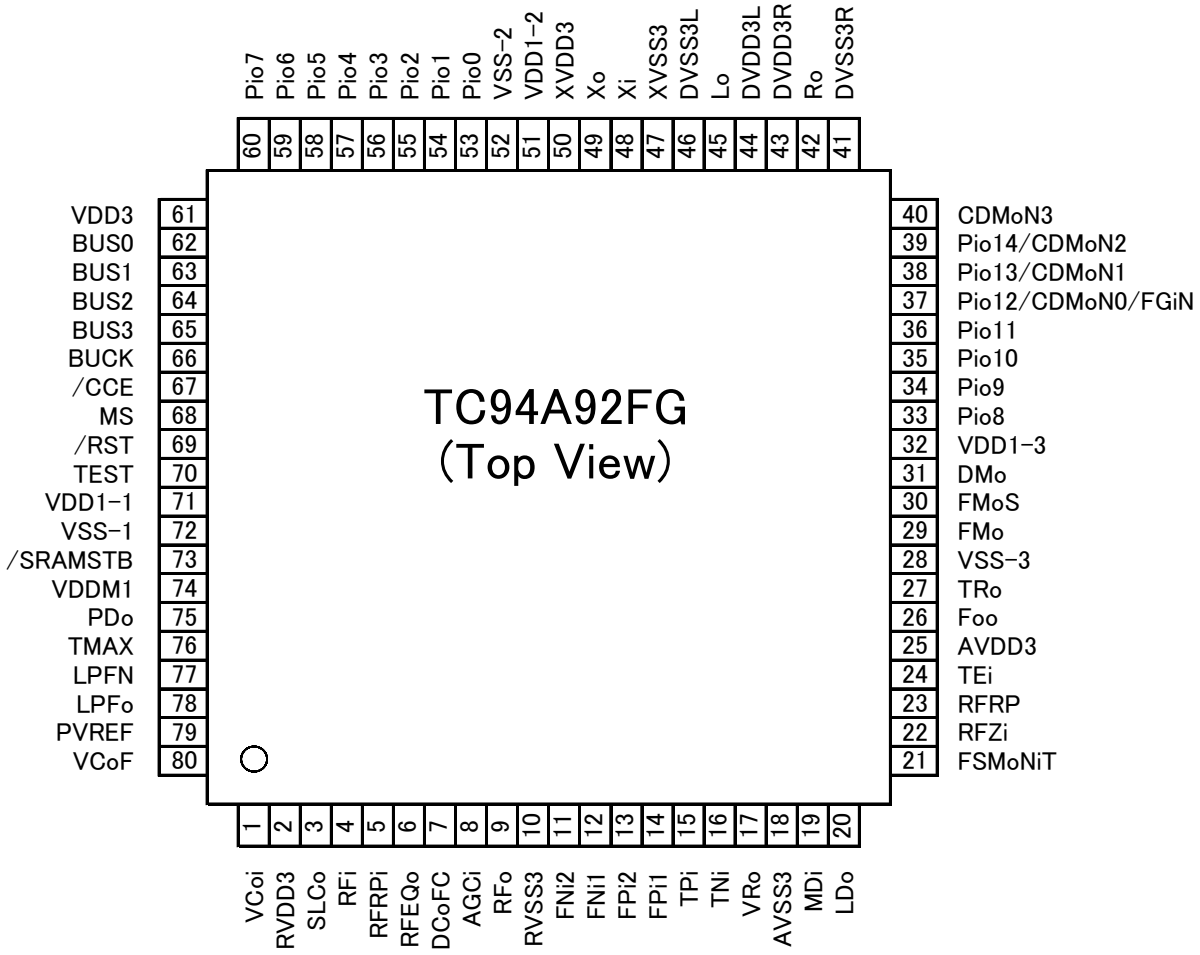

TC94A92FG Block Diagram

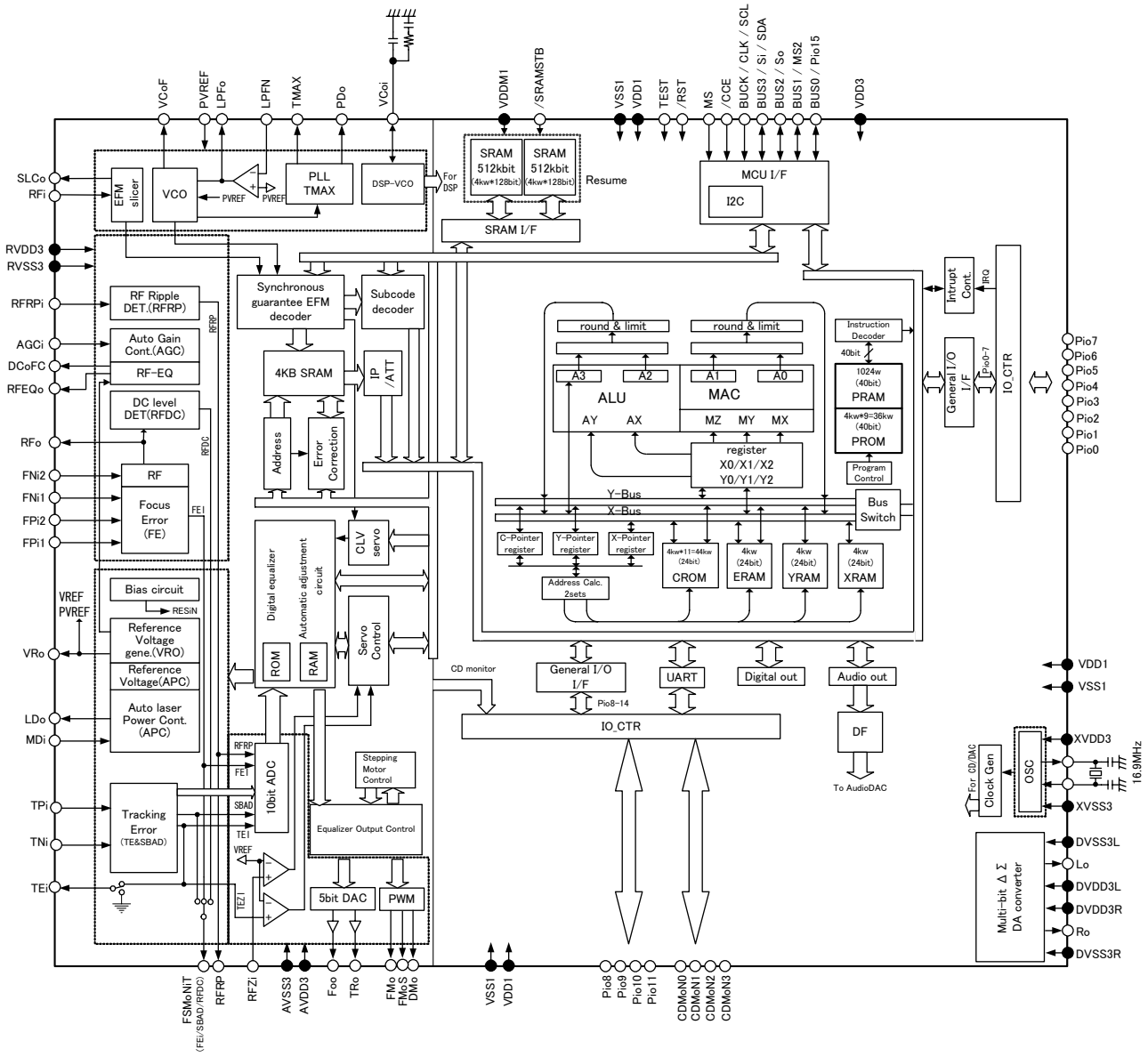

TC94A92FG Terminal Function

Pin No.	Symbol	I/O	Description	Default	Remarks
1	VCoi	O 3AI/F	DSP VCO - EFM and PLCK Phase difference signal output pin. (DSP VCO control voltage inputr pin.)	O	3 state output
2	RVDD3	-	CD-DSP-Power supply for 3.3V RF amplifier core and PLL circuit	-	
3	SLCo	O 3AI/F	EFM slice level output pin	O	Connect capacitor according with se rvo frequency band.
4	RFi	I 3AI/F	RF signal input pin	I	Selectable Zin 20/10 kΩ
5	RFRPi	I 3AI/F	RF ripple signal input pin	I	
6	RFEQo	O 3AI/F	RF equalizer circuit output pin.	O	Connect to RFRPi by 0.1uF, to RFi by 4700pF.
7	DCoFC	O 3AI/F	RFEQo offset compensation LPF output	O	Connect to Vro by more than 0.015uF
8	AGCi	I 3AI/F	RF signal AGC amplifier input pin	I	
9	RFo	O 3AI/F	RF signal generation amplifier output pin	O	
10	RVSS3	-	Grounding pin for 3.3 RF amplifier core and PLL circuit	-	
11	FNI2	I 3AI/F	Main beam signal input pin. To be connected to PIN diode C.	I	
12	FNI1	I 3AI/F	Main beam signal input pin. To be connected to PIN diode A.	I	
13	FPI2	I 3AI/F	Main beam signal input pin. To be connected to PIN diode D.	I	
14	FPI1	I 3AI/F	Main beam signal input pin. To be connected to PIN diode B.	I	
15	TPi	I 3AI/F	Sub beam signal input pin. To be connected to PIN diode F.	I	
16	TNi	I 3AI/F	Sub beam signal input pin. To be connected to PIN diode E.	I	
17	VRo	O 3AI/F	1.65 V reference voltage output pin.	O	Connected to PVREF, And connect to GNG by 0.1uF+100uF.
18	AVSS3	-	Grounding pin for 3.3V CD analog circuits.	-	
19	MDi	I 3AI/F	Monitor photodiode amplifier input pin.	I	Reference Voltage=178mVtyp.
20	LDo	O 3AI/F	Laser diode amplifier output pin	O	

Pin No.	Symbol	I/O	Description	Default	Remarks
21	FSMoNiT	O 3AI/F	Focus Error signal / Sub beam add signal output pin(monitor pin/GND)	O	
22	RFZi	I 3AI/F	RF ripple zero-cross signal Input pin	I	
23	RFRP	O 3AI/F	RF ripple signal output pin.	O	
24	TEi	O 3AI/F	Tracking error signal output pin.	O	Bulit-in serises R=500Ω. Connect to VRo by capacitor.
25	AVDD3	-	Power supply pin for 3.3 V CD analog circuits.	-	
26	FOo	O 3AI/F	Focus servo equalizer output pin.	O	Bulit-in serises R=3.3 kΩ
27	TRo	O 3AI/F	Tracking servo equalizer output pin.	O	Bulit-in output R=3.3 kΩ
28	VSS-3	-	Grounding pin for 1.5V Decoder-DSP CD circuit	-	
29	FMo	O 3AI/F	Feed servo equalizer output pin.	O	Bulit-in output R=3.3 kΩ
30	FMoS	O 3AI/F	Feed servo equalizer output pin. （Stepper motor application）	O	Bulit-in output R=3.3 kΩ
31	DMo	O 3AI/F	Disc servo equalizer output pin	O	Bulit-in output R=3.3 kΩ
32	VDD1-3	I/O 3I/F	Power supply pin for 1.5V Decoder-DSP /CD circuit	-	
33	Pio8	I/O 3I/F	Port 8（General Input/Output Port ）	I	CMOS Port Schmitt input Refer to [1.2 Pin Assinment Table]
34	Pio9	I/O 3I/F	Port 9（General Input/Output Port ）	I	CMOS Port Schmitt input Refer to [1.2 Pin Assinment Table]
35	Pio10	I/O 3I/F	Port 10（General Input/Output Port ）	I	CMOS Port Schmitt input Refer to [1.2 Pin Assinment Table]
36	Pio11	I/O 3I/F	Port 11（General Input/Output Port ）	I	CMOS Port Schmitt input Refer to [1.2 Pin Assinment Table]
37	Pio12/ CDMoN0/ FGiN	I/O 3I/F	Port 12（General Input/Output Port ） / CD Monitor 0 / FG signal input	I	CMOS Port Schmitt input Refer to [1.2 Pin Assinment Table]
38	Pio13/ CDMoN1	I/O 3I/F	Port 13（General Input/Output Port ） / CD Monitor1	I	CMOS Port Schmitt input Refer to [1.2 Pin Assinment Table]
39	Pio14/ CDMoN2	I/O 3I/F	Port 14（General Input/Output Port ） / CD Monitor 2	I	CMOS Port Schmitt input Refer to [1.2 Pin Assinment Table]
40	CDMoN3	O 3I/F	CD Monitor3 (Default output : SBSY)	O	CMOS Port Refer to [1.2 Pin Assinment Table]

Pin No.	Symbol	I/O	Description	Default	Remarks
41	DVSS3R	-	Grounding pin for 3.3V Muiti-Bit DAC circuit	-	
42	Ro	O 3AI/F	R channel audio output pin of Audio DAC.	O	
43	DVDD3R	-	Power supply pin for 3.3V Audio DAC circuit.	-	
44	DVDD3L	-	Power supply pin for 3.3V Audio DAC circuit.	-	
45	Lo	O 3AI/F	L channel audio output pin of Audio DAC	O	
46	DVSS3L	-	Grounding pin for 3.3V Muiti-Bit DAC Circuit	-	
47	XVSS3	-	Grounding pin for 3.3V clock oscillator circuit	-	
48	Xi	I 3AI/F	System clock Input pin	I	Xtal oscillation circuit. Connect feedback resistor 1 MΩ between Xo and Xi
49	Xo	O 3AI/F	System clock Output pin	O	
50	XVDD3	-	Power Supply pin for 3.3V clock oscillator circuit	-	
51	VDD1-2	-	Power Supply pin for 1.5V Digital circuit	-	
52	VSS-2	-	Grounding pin for 1.5V digital circuit	-	
53	Pio0	I/O 3I/F	Port 0（General Input/Output Port ）	I	CMOS Port Schmitt input Refer to [1.2 Pin Assinment Table]
54	Pio1	I/O 3I/F	Port 1（General Input/Output Port ）	I	CMOS Port Schmitt input Refer to [1.2 Pin Assinment Table]
55	Pio2	I/O 3I/F	Port 2（General Input/Output Port ）	I	CMOS Port Schmitt input Refer to [1.2 Pin Assinment Table]
56	Pio3	I/O 3I/F	Port 3（General Input/Output Port ）	I	CMOS Port Schmitt input Refer to [1.2 Pin Assinment Table]
57	Pio4	I/O 3I/F	Port 4（General Input/Output Port ）	I	CMOS Port Schmitt input Refer to [1.2 Pin Assinment Table]
58	Pio5	I/O 3I/F	Port 5（General Input/Output Port ）	I	CMOS Port Schmitt input Refer to [1.2 Pin Assinment Table]
59	Pio6	I/O 3I/F	Port 6（General Input/Output Port）	I	CMOS Port Schmitt input Refer to [1.2 Pin Assinment Table]
60	Pio7	I/O 3I/F	Port 7（General Input/Output Port ）	I	CMOS Port Schmitt input Refer to [1.2 Pin Assinment Table]

Pin No.	Symbol	I/O	Description	Default	Remarks
61	VDD3	-	Power Supply pin for 3.3V Digital circuit	-	
62	BUS0	I/O 3I/F	Microprocessor I/F data input/output pin 0	I	CMOS Port Schmitt input Refer to [1.2 Pin Assinment Table]
63	BUS1	I/O 3I/F	Microprocessor I/F data input/output pin 1	I	CMOS Port Schmitt input Refer to [1.2 Pin Assinment Table]
64	BUS2	I/O 3I/F	Microprocessor I/F data input/output pin 2	I	CMOS Port Schmitt input Refer to [1.2 Pin Assinment Table]
65	BUS3	I/O 3I/F	Microprocessor I/F data input/output pin 3	I	CMOS Port Schmitt input Refer to [1.2 Pin Assinment Table]
66	BUCK	I 3I/F	Microprocessor I/F BUS clock Input pin	I	Schmitt input Refer to [1.2 Pin Assinment Table]
67	/CCE	I 3I/F	Microprocessor I/F chip enable input pin	I	Schmitt input Refer to [1.2 Pin Assinment Table]
68	MS	I 3I/F	Microprocessor I/F mode selection pin. “H”: Parallel I/F, “L”: Serial I/F	I	Refer to [1.2 Pin Assinment Table]
69	/RST	I 3I/F	Reset Input pin	I	Schmitt input
70	Test	I 3I/F	Test pin（”L” fixed）	I	Connect to GND for normal operation
71	VDD1-1	-	Power Supply pin for 1.5V Digital circuit	-	
72	VSS-1	-	Grounding pin for 1.5V Digital circuit	-	
73	/SRAMSTB	I 3I/F	1Mbit SRAM stand by pin（/SRAMSTB="L"）	I	
74	VDDM1	-	Power Supply for 1.5V 1Mbit SRAM circuit	-	
75	PDo	O 3AI/F	EFM and PLCK Phase difference signal output pin.	O	4-state output (RVDD3, RVSS3,PVREF, Hiz)
76	TMAX	O 3AI/F	TMAX detection result output pin	O	3-state output (RVDD3, RVSS3, Hiz)
77	LPFN	I 3AI/F	PLL circuit LPF amplifier inversion input pin	I	
78	LPFo	O 3AI/F	PLL circuit LPF amplifier Output pin	O	
79	PVREF	-	PLL circuit 1.65 V reference voltage pin.	-	Connected to VRO. Connect to GND by 0.1uF and 100uF.
80	VCoF	O 3AI/F	VCO filter pin	O	Connect to GND by 0.01uF

3A I/F : 3 V analog circuit input/output pin.
1.5 I/F : 1.5Vdigital input/output pin.
3 I/F : 3 V digital input/output pin.

IP4001CR (MAIN : IC903)

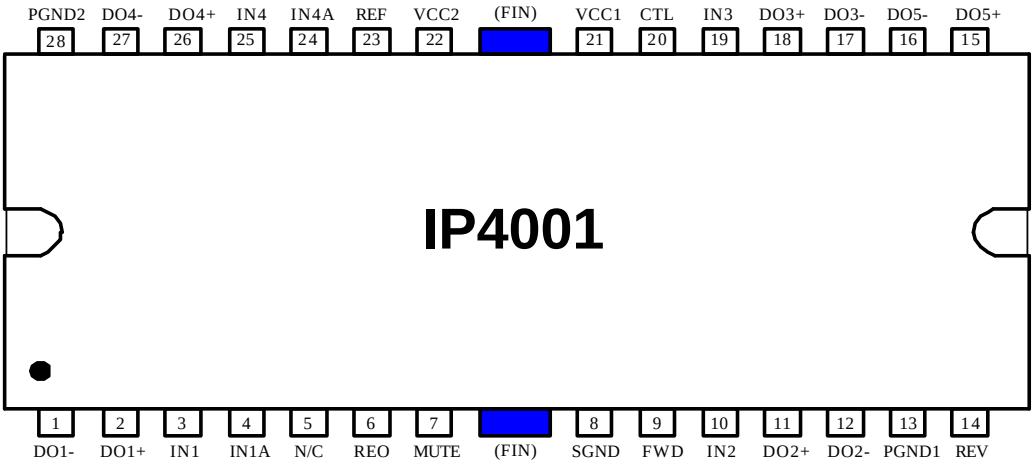

IP4001CR Block Diagram

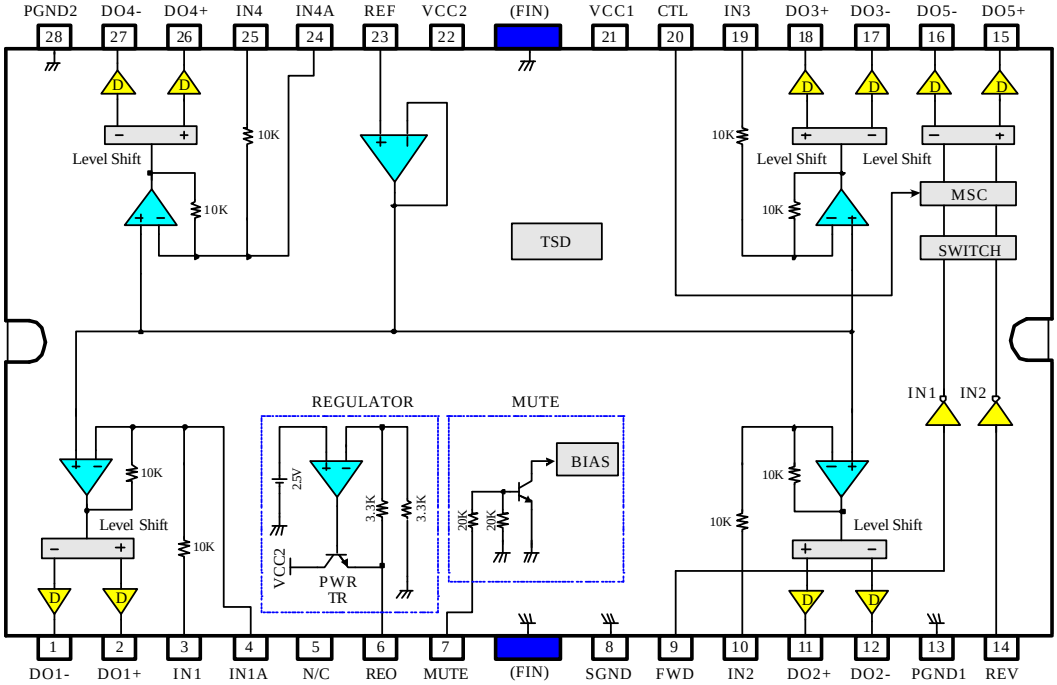

IP4001CR Pin Discriptions

NO	SYMBOL	I/O	DESCRIPTION	NO	SYMBOL	I/O	DESCRIPTION
1	DO1-	O	CH1 OUTPUT (-)	15	DO5+	O	CH5 OUTPUT (+)
2	DO1+	O	CH1 OUTPUT (+)	16	DO5-	O	CH5 OUTPUT (-)
3	IN1	I	CH1 INPUT 1	17	DO3-	O	CH3 OUTPUT (-)
4	IN1A	I	CH1 INPUT 2	18	DO3+	O	CH3 OUTPUT (+)
5	N / C	-	NO-CONNECTION	19	IN3	I	CH3 INPUT
6	REO	O	REGULATOR OUTPUT	20	CTL	I	CH5 MOTOR SPEED CONTROL
7	MUTE	I	MUTE INPUT	21	VCC1	I	SUPPLY VOLTAGE 1 (CH2,CH3,CH5)
8	SGND	-	SIGNAL GROUND	22	VCC2	I	SUPPLY VOLTAGE 2 (CH1,CH4,SIGNAL,REG)
9	FWD	I	CH5 INPUT 1	23	REF	I	CH BIAS INPUT
10	IN2	I	CH2 INPUT	24	IN4A	I	CH4 INPUT 1
11	DO2+	O	CH2 OUTPUT (+)	25	IN4	I	CH4 INPUT 2
12	DO2-	O	CH2 OUTPUT (-)	26	DO4+	O	CH4 OUTPUT (+)
13	PGND1	-	POWER GROUND 1	27	DO4-	O	CH4 OUTPUT (-)
14	REV	I	CH5 INPUT 2	28	PGND2	-	POWER GROUND 2

PCM9211 (MAIN : IC103)

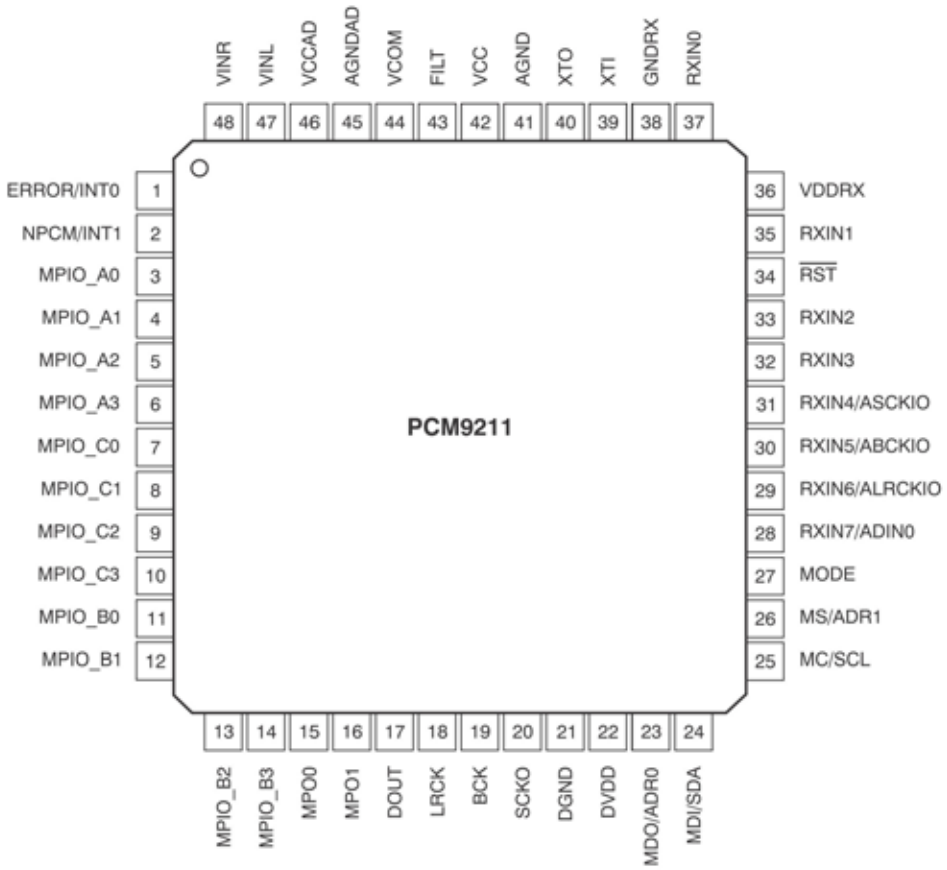

PCM9211 Block Diagram

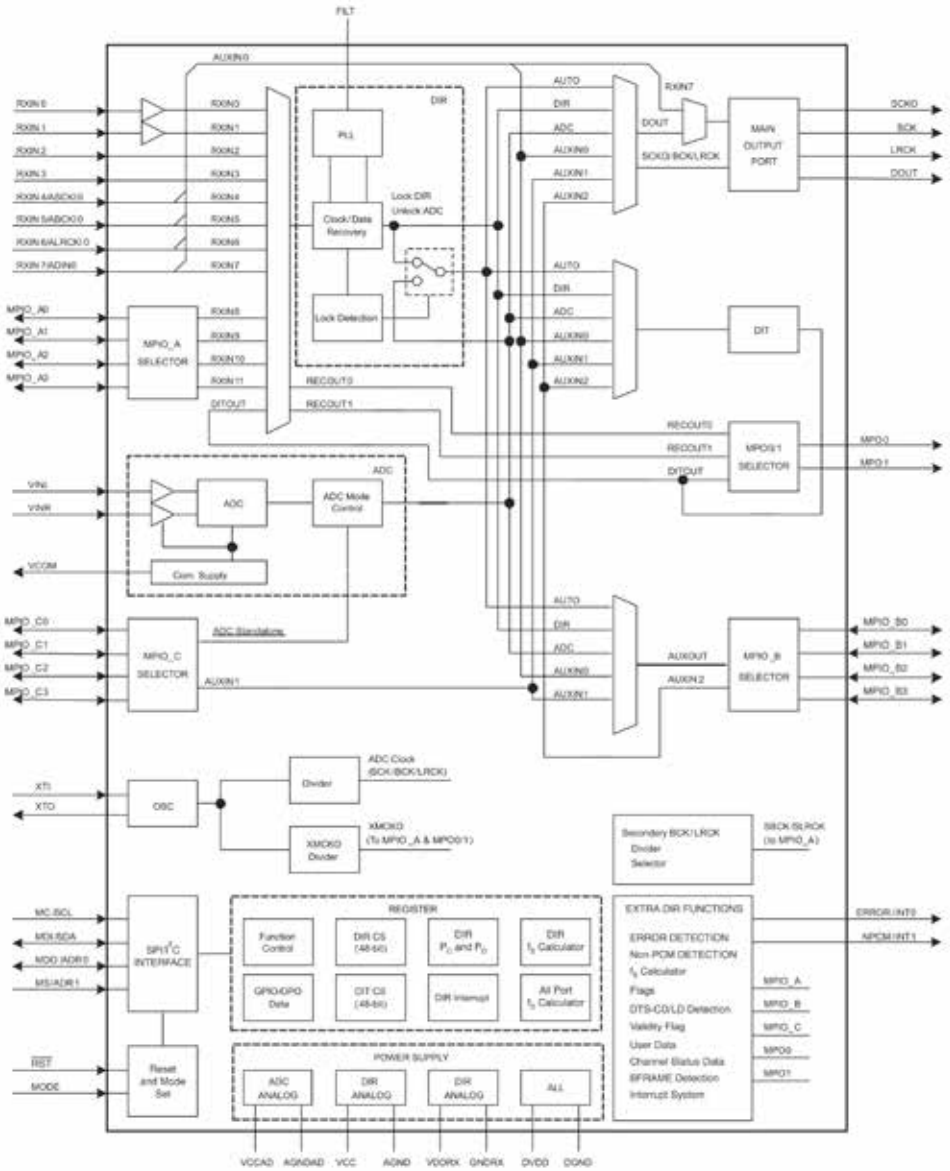

PCM9211 Pin Discriptions

PIN				
NO.	NAME	I/O	5-V TOLERANT	DESCRIPTION
1	ERROR/INT0	O	No	DIR Error detection output / Interrupt0 output
2	NPCM/INT1	O	No	DIR Non-PCM detection output / Interrupt1 output
3	MPIO_A0	I/O	Yes	Multipurpose I/O, Group A(1)
4	MPIO_A1	I/O	Yes	Multipurpose I/O, Group A(1)
5	MPIO_A2	I/O	Yes	Multipurpose I/O, Group A(1)
6	MPIO_A3	I/O	Yes	Multipurpose I/O, Group A(1)
7	MPIO_C0	I/O	Yes	Multipurpose I/O, Group C(1)
8	MPIO_C1	I/O	Yes	Multipurpose I/O, Group C(1)
9	MPIO_C2	I/O	Yes	Multipurpose I/O, Group C(1)
10	MPIO_C3	I/O	Yes	Multipurpose I/O, Group C(1)
11	MPIO_B0	I/O	Yes	Multipurpose I/O, Group B(1)
12	MPIO_B1	I/O	Yes	Multipurpose I/O, Group B(1)
13	MPIO_B2	I/O	Yes	Multipurpose I/O, Group B(1)
14	MPIO_B3	I/O	Yes	Multipurpose I/O, Group B(1)
15	MPO0	O	No	Multipurpose output 0
16	MPO1	O	No	Multipurpose output 1
17	DOUT	O	No	Main output port, serial digital audio data output
18	LRCK	O	No	Main output port, LR clock output
19	BCK	O	No	Main output port, Bit clock output
20	SCKO	O	No	Main output port, System clock output
21	DGND	–	–	Ground, for digital
22	DVDD	–	–	Power supply, 3.3 V (typ.), for digital
23	MDO/ADR0	I/O	Yes	Software control I/F, SPI data output / I^2C slave address setting0(2)
24	MDI/SDA	I/O	Yes	Software control I/F, SPI data input / I^2C data input/output(2)(3)
25	MC/SCL	I	Yes	Software control I/F, SPI clock input / I^2C clock input(2)
26	MS/ADR1	I	Yes	Software control I/F, SPI chip select / I^2C slave address setting1(2)
27	MODE	I	No	Control mode setting, (see the Serial Control Mode section, Control Mode Pin Setting)
28	RXIN7/ADIN0	I	Yes	Biphase signal, input 7 / AUXIN0, serial audio data input(2)
29	RXIN6/ALRCKI0	I	Yes	Biphase signal, input 6 / AUXIN0, LR clock input(2)
30	RXIN5/ABCKI0	I	Yes	Biphase signal, input 5 / AUXIN0, bit clock input(2)
31	RXIN4/ASCKI0	I	Yes	Biphase signal, input 4 / AUXIN0, system clock input(2)
32	RXIN3	I	Yes	Biphase signal, input 3(2)
33	RXIN2	I	Yes	Biphase signal, input 2(2)
34	$\overline{RST}$	I	Yes	Reset Input, active low(2)(4)
35	RXIN1	I	Yes	Biphase signal, input 1, built-in coaxial amplifier
36	VDDRX	–	–	Power supply, 3.3 V (typ.), for RXIN0 and RXIN1.
37	RXIN0	I	Yes	Biphase signal, input 0, built-in coaxial amplifier
38	GNDRX	-	-	Ground, for RXIN
39	XTI	I	No	Oscillation circuit input for crystal resonator or external XTI clock source input(5)
40	XTO	O	No	Oscillation circuit output for crystal resonator
41	AGND	–	–	Ground, for PLL analog
42	VCC	–	–	Power supply, 3.3 V (typ.), for PLL analog
43	FILT	O	No	External PLL loop filter connection terminal; must connect recommended filter
44	VCOM	O	No	ADC common voltage output; must connect external decoupling capacitor
45	AGNDAD	–	–	Ground, for ADC analog
46	VCCAD	–	–	Power supply, 5.0 V (typ.), for ADC analog
47	VINL	I	No	ADC analog voltage input, left channel
48	VINR	I	No	ADC analog voltage input, right channel

(1) Schmitt trigger input
(2) Schmitt trigger input
(3) Open-drain configuration in I^2C mode
(4) Onboard pull-down resistor (50 kΩ, typical)
(5) CMOS Schmitt trigger input

NJM2755 (MAIN : IC701)

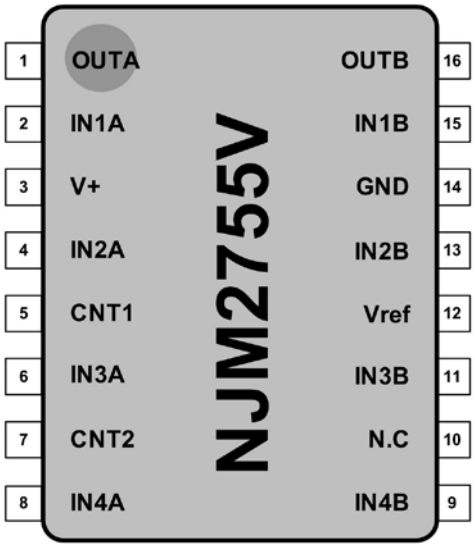

PIN.No.	SYMBOL	FUNCTION	PIN.No.	SYMBOL	FUNCTION
1	OUTA	Ach Output Terminal	9	IN4B	Bch Input Terminal4
2	IN1A	Ach Input Terminal1	10	N.C	No Connection
3	V+	Power Supply Terminal	11	IN3B	Bch Input Terminal3
4	IN2A	Ach Input Terminal2	12	Vref	Reference Terminal
5	CNT1	Control Switch Terminal1	13	IN2B	Bch Input Terminal2
6	IN3A	Ach Input Terminal3	14	GND	GND Terminal
7	CNT2	Control Switch Terminal2	15	IN1B	Bch Input Terminal1
8	IN4A	Ach Input Terminal4	16	OUTB	Bch Output Terminal

NJM2755 Block Diagram

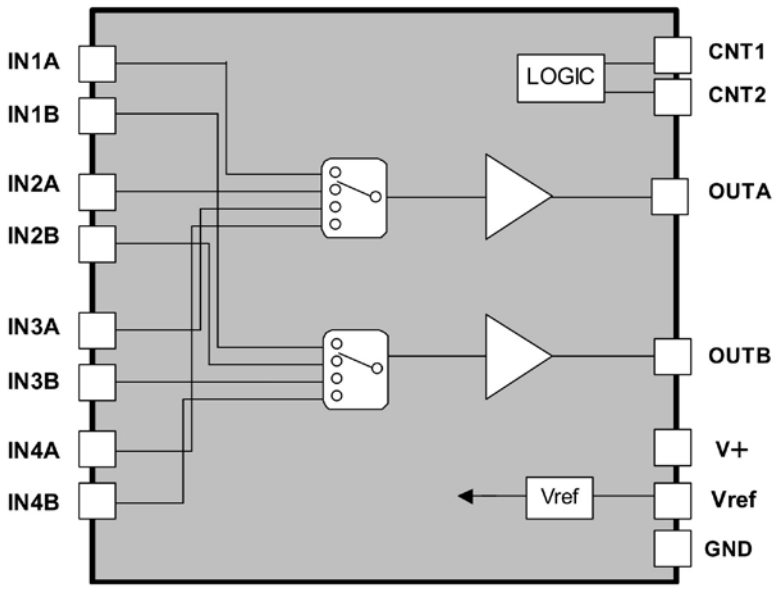

TAS5142DKD (MAIN : IC118)

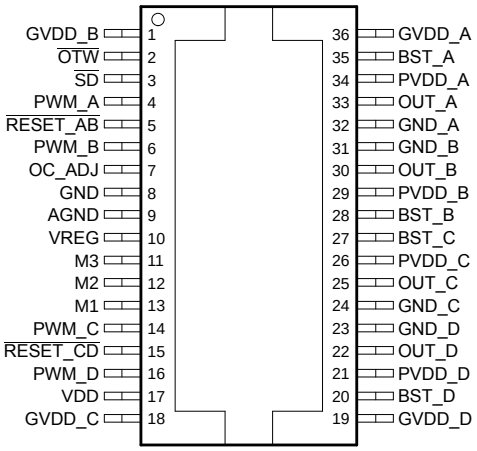

TAS5142 Pin Discriptions

TERMINAL			FUNCTION (1)	DESCRIPTION
NAME	DKD NO.	DDV NO.		
AGND	9	11	P	Analog ground
BST_A	35	43	P	HS bootstrap supply (BST), external capacitor to OUT_A required
BST_B	28	34	P	HS bootstrap supply (BST), external capacitor to OUT_B required
BST_C	27	33	P	HS bootstrap supply (BST), external capacitor to OUT_C required
BST_D	20	24	P	HS bootstrap supply (BST), external capacitor to OUT_D required
GND	8	10	P	Ground
GND_A	32	38	P	Power ground for half-bridge A
GND_B	31	37	P	Power ground for half-bridge B
GND_C	24	30	P	Power ground for half-bridge C
GND_D	23	29	P	Power ground for half-bridge D
GVDD_A	36	44	P	Gate-drive voltage supply requires 0.1-µF capacitor to AGND
GVDD_B	1	1	P	Gate-drive voltage supply requires 0.1-µF capacitor to AGND
GVDD_C	18	22	P	Gate-drive voltage supply requires 0.1-µF capacitor to AGND
GVDD_D	19	23	P	Gate-drive voltage supply requires 0.1-µF capacitor to AGND
M1	13	15	I	Mode selection pin
M2	12	14	I	Mode selection pin
M3	11	13	I	Mode selection pin
NC	–	3, 4, 19, 20, 25, 42	–	No connect. Pins may be grounded.
OC_ADJ	7	9	O	Analog overcurrent programming pin requires resistor to ground
$\overline{\text{OTW}}$	2	2	O	Overtemperature warning signal, open-drain, active-low
OUT_A	33	39	O	Output, half-bridge A
OUT_B	30	36	O	Output, half-bridge B
OUT_C	25	31	O	Output, half-bridge C
OUT_D	22	28	O	Output, half-bridge D
PVDD_A	34	40, 41	P	Power supply input for half-bridge A requires close decoupling of 0.1-µF capacitor to GND_A.
PVDD_B	29	35	P	Power supply input for half-bridge B requires close decoupling of 0.1-µF capacitor to GND_B.
PVDD_C	26	32	P	Power supply input for half-bridge C requires close decoupling of 0.1-µF capacitor to GND_C.
PVDD_D	21	26, 27	P	Power supply input for half-bridge D requires close decoupling of 0.1-µF capacitor to GND_D.
PWM_A	4	6	I	Input signal for half-bridge A
PWM_B	6	8	I	Input signal for half-bridge B
PWM_C	14	16	I	Input signal for half-bridge C
PWM_D	16	18	I	Input signal for half-bridge D
$\overline{\text{RESET_AB}}$	5	7	I	Reset signal for half-bridge A and half-bridge B, active-low
$\overline{\text{RESET_CD}}$	15	17	I	Reset signal for half-bridge C and half-bridge D, active-low
$\overline{\text{SD}}$	3	5	O	Shutdown signal, open-drain, active-low
VDD	17	21	P	Power supply for digital voltage regulator requires 0.1-µF capacitor to GND.
VREG	10	12	P	Digital regulator supply filter pin requires 0.1-µF capacitor to AGND.

(1) I = input, O = output, P = power

TAS5142 Block Diagram

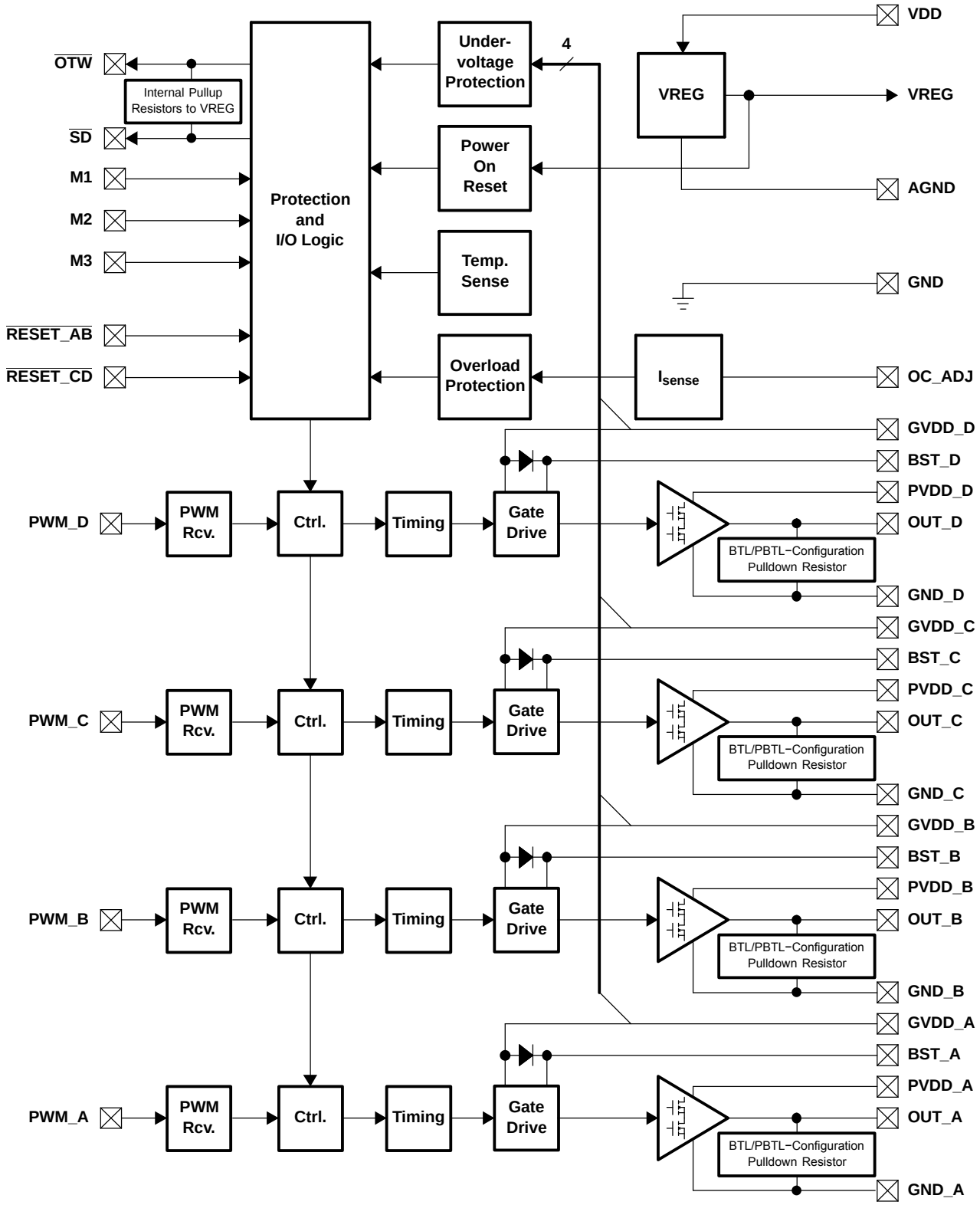

TAS5508C (MAIN : IC108)

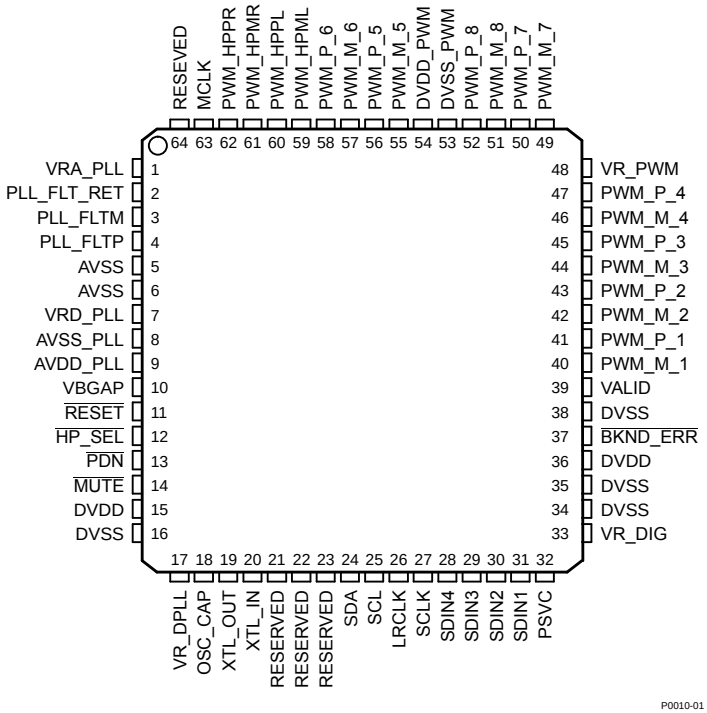

TAS5508 Pin Discriptions

TERMINAL		TYPE(1)	5-V TOLERANT	TERMINATION(2)	DESCRIPTION
NAME	NO.				
AVDD_PLL	9	P			3.3-V analog power supply for PLL. This terminal can be connected to the same power source used to drive power terminal DVDD, but to achieve low PLL jitter, this terminal should be bypassed to AVSS_PLL with a 0.1-µF low-ESR capacitor.
AVSS	5, 6	P			Analog ground
AVSS_PLL	8	P			Analog ground for PLL. This terminal should reference the same ground as terminal DVSS, but to achieve low PLL jitter, ground noise at this terminal must be minimized. The availability of the AVSS terminal allows a designer to use optimizing techniques such as star ground connections, separate ground planes, or other quiet ground-distribution techniques to achieve a quiet ground reference at this terminal.
$\overline{\text{BKND_ERR}}$	37	DI		Pullup	Active-low. A back-end error sequence is generated by applying logic low to this terminal. The $\overline{\text{BKND_ERR}}$ results in no change to any system parameters, with all H-bridge drive signals going to a hard-mute (M) state.
DVDD	15, 36	P			3.3-V digital power supply
DVDD_PWM	54	P			3.3-V digital power supply for PWM
DVSS	16, 34, 35, 38	P			Digital ground
DVSS_PWM	53	P			Digital ground for PWM
$\overline{\text{HP_SEL}}$	12	DI	5 V	Pullup	Headphone in/out selector. When a logic low is applied, the headphone is selected (speakers are off). When a logic high is applied, speakers are selected (headphone is off).
LRCLK	26	DI	5 V		Serial-audio data left/right clock (sampling-rate clock)
MCLK	63	DI	5 V	Pulldown	MCLK is a 3.3-V master clock input. The input frequency of this clock can range from 4 MHz to 50 MHz.
$\overline{\text{MUTE}}$	14	DI	5 V	Pullup	Soft mute of outputs, active-low (muted signal = a logic low, normal operation = a logic high). The mute control provides a noiseless volume ramp to silence. Releasing mute provides a noiseless ramp to previous volume.
OSC_CAP	18	AO			Oscillator capacitor
$\overline{\text{PDN}}$	13	DI	5 V	Pullup	Power down, active-low. $\overline{\text{PDN}}$ powers down all logic and stops all clocks whenever a logic low is applied. The internal parameters are preserved through a power-down cycle, as long as $\overline{\text{RESET}}$ is not active. The duration for system recovery from power down is 100 ms.
PLL_FLT_RET	2	AO			PLL external filter return
PLL_FLTM	3	AO			PLL negative input. Connected to PLL_FLT_RTN via an RC network
PLL_FLTP	4	AI			PLL positive input. Connected to PLL_FLT_RTN via an RC network
PSVC	32	O			Power-supply volume control PWM output
PWM_HPML	59	DO			PWM left-channel headphone (differential –)
PWM_HPMR	61	DO			PWM right-channel headphone (differential –)
PWM_HPPL	60	DO			PWM left-channel headphone (differential +)
PWM_HPPR	62	DO			PWM right-channel headphone (differential +)
PWM_M_1	40	DO			PWM 1 output (differential –)
PWM_M_2	42	DO			PWM 2 output (differential –)
PWM_M_3	44	DO			PWM 3 output (differential –)
PWM_M_4	46	DO			PWM 4 output (differential –)
PWM_M_5	55	DO			PWM 5 output (differential –)
PWM_M_6	57	DO			PWM 6 output (differential –)
PWM_M_7	49	DO			PWM 7 (lineout L) output (differential –)
PWM_M_8	51	DO			PWM 8 (lineout R) output (differential –)
PWM_P_1	41	DO			PWM 1 output (differential +)
PWM_P_2	43	DO			PWM 2 output (differential +)

(1) Type: A = analog; D = 3.3-V digital; P = power/ground/decoupling; I = input; O = output
(2) All pullups are 200-mA weak pullups and all pulldowns are 200-mA weak pulldowns. The pullups and pulldowns are included to ensure proper input logic levels if the terminals are left unconnected (pullups => logic-1 input; pulldowns => logic-0 input). Devices that drive inputs with pullups must be able to sink 200 mA, while maintaining a logic-0 drive level. Devices that drive inputs with pulldowns must be able to source 200 mA, while maintaining a logic-1 drive level.

TERMINAL		TYPE(1)	5-V TOLERANT	TERMINATION(2)	DESCRIPTION
NAME	NO.				
PWM_P_3	45	DO			PWM 3 output (differential +)
PWM_P_4	47	DO			PWM 4 output (differential +)
PWM_P_5	56	DO			PWM 5 output (differential +)
PWM_P_6	58	DO			PWM 6 output (differential +)
PWM_P_7	50	DO			PWM 7 (lineout L) output (differential +)
PWM_P_8	52	DO			PWM 8 (lineout R) output (differential +)
RESERVED	21, 22, 23, 64				Connect to digital ground
$\overline{\text{RESET}}$	11	DI	5 V	Pullup	System reset input, active-low. A system reset is generated by applying a logic low to this terminal. $\overline{\text{RESET}}$ is an asynchronous control signal that restores the TAS5508 to its default conditions, sets the valid output low, and places the PWM in the hard mute (M) state. Master volume is immediately set to full attenuation. On the release of $\overline{\text{RESET}}$, if $\overline{\text{PDN}}$ is high, the system performs a 4- to 5-ms device initialization and sets the volume at mute.
SCL	25	DI	5 V		I^2C serial-control clock input/output
SCLK	27	DI	5 V		Serial-audio data clock (shift clock) input
SDA	24	DIO	5 V		I^2C serial-control data-interface input/output
SDIN1	31	DI	5 V	Pulldown	Serial-audio data input 1 is one of the serial-data input ports. SDIN1 supports four discrete (stereo) data formats and is capable of inputting data at 64 Fs.
SDIN2	30	DI	5 V	Pulldown	Serial-audio data input 2 is one of the serial-data input ports. SDIN2 supports four discrete (stereo) data formats and is capable of inputting data at 64 Fs.
SDIN3	29	DI	5 V	Pulldown	Serial-audio data input 3 is one of the serial-data input ports. SDIN3 supports four discrete (stereo) data formats and is capable of inputting data at 64 Fs.
SDIN4	28	DI	5 V	Pulldown	Serial-audio data input 4 is one of the serial-data input ports. SDIN4 supports four discrete (stereo) data formats and is capable of inputting data at 64 Fs.
VALID	39	DO			Output indicating validity of PWM outputs, active-high
VBGAP	10	P			Band-gap voltage reference. A pinout of the internally regulated 1.2-V reference. Typically has a 1-nF low-ESR capacitor between VBGAP and AVSS_PLL. This terminal must not be used to power external devices.
VR_DIG	33	P			Voltage reference for 1.8-V digital core supply. A pinout of the internally regulated 1.8-V power used by digital core logic. A 4.7-µF low-ESR capacitor(3) should be connected between this terminal and DVSS. This terminal must not be used to power external devices.
VR_DPLL	17	P			Voltage reference for 1.8-V digital PLL supply. A pinout of the internally regulated 1.8-V power used by digital PLL logic. A 0.1-µF low-ESR capacitor(3) should be connected between this terminal and DVSS_CORE. This terminal must not be used to power external devices.
VR_PWM	48	P			Voltage reference for 1.8-V digital PWM core supply. A pinout of the internally regulated 1.8-V power used by digital PWM core logic. A 0.1-µF low-ESR capacitor(3) should be connected between this terminal and DVSS_PWM. This terminal must not be used to power external devices.
VRA_PLL	1	P			Voltage reference for 1.8-V PLL analog supply. A pinout of the internally regulated 1.8-V power used by PLL logic. A 0.1-µF low-ESR capacitor(3) should be connected between this terminal and AVSS_PLL. This terminal must not be used to power external devices.
VRD_PLL	7	P			Voltage reference for 1.8-V PLL digital supply. A pinout of the internally regulated 1.8-V power used by PLL logic. A 0.1-µF low-ESR capacitor(3) should be connected between this terminal and AVSS_PLL. This terminal must not be used to power external devices.
XTL_IN	20	AI			XTL_OUT and XTL_IN are the only LVCMOS terminals on the device. They provide a reference clock for the TAS5508 via use of an external fundamental-mode crystal. XTL_IN is the 1.8-V input port for the oscillator circuit. A 13.5-MHz crystal (HCM49) is recommended.
XTL_OUT	19	AO			XTL_OUT and XTL_IN are the only LVCMOS terminals on the device. They provide a reference clock for the TAS5508 via use of an external fundamental-mode crystal. XTL_OUT is the 1.8-V output drive to the crystal. A 13.5-MHz crystal (HCM49) is recommended.

(3) If desired, low-ESR capacitance values can be implemented by paralleling two or more ceramic capacitors of equal value. Paralleling capacitors of equal value provides an extended high-frequency supply decoupling. This approach avoids the potential of producing parallel resonance circuits that have been observed when paralleling capacitors of different values.

TAS5508 Block Diagram

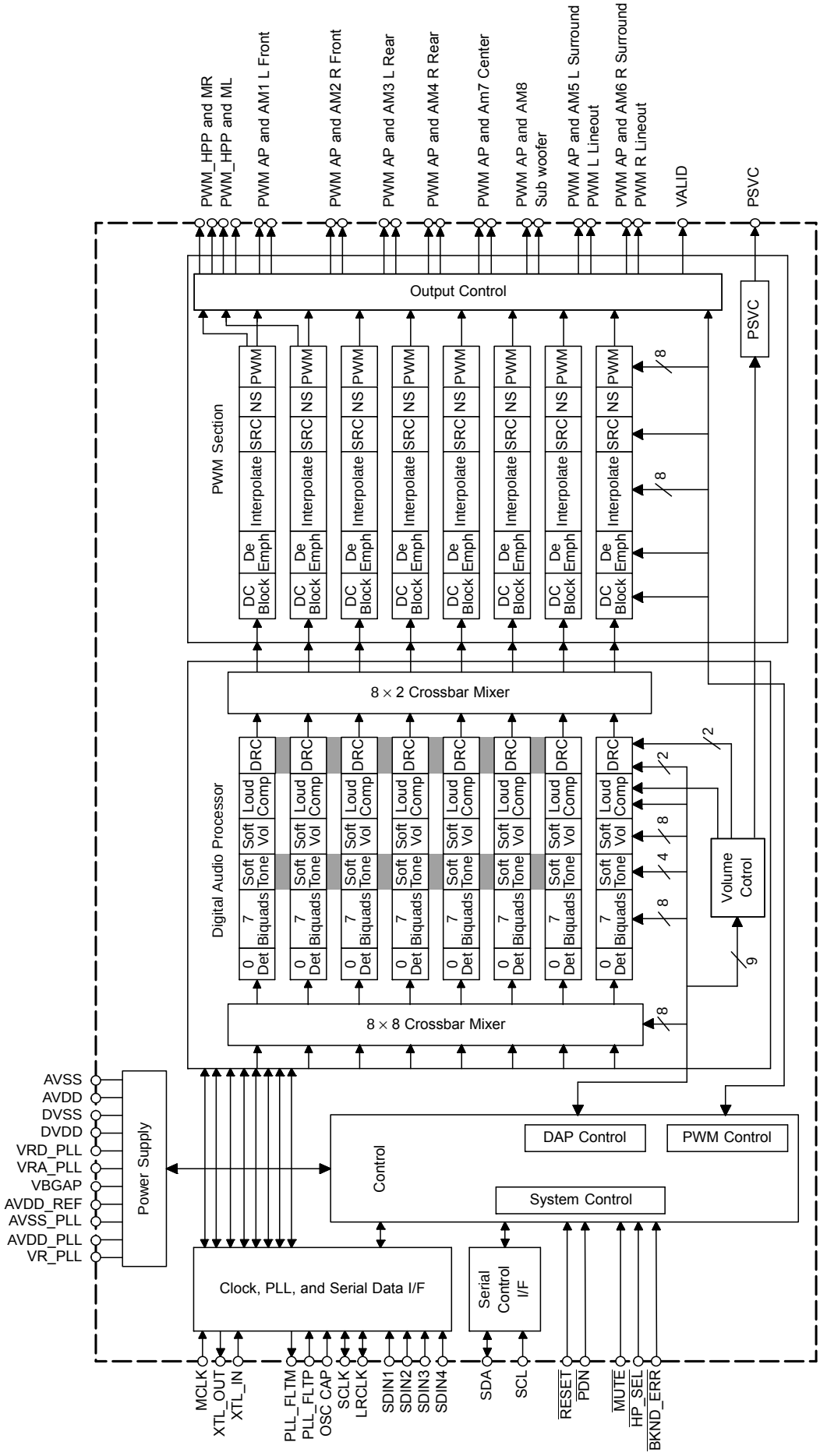

L6565 (SMPS : IC821)

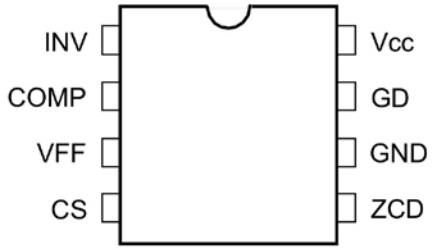

N°	Name	Function
1	INV	Inverting input of the error amplifier. The information on the output voltage is fed into the pin through either a resistor divider (primary regulation) or an optocoupler (secondary feedback). This pin can be grounded in some secondary feedback schemes (see pin 2).
2	COMP	Output of the error amplifier. Typically, a compensation network is placed between this pin and the INV pin to achieve stability and good dynamic performance of the voltage control loop. With secondary feedback, the pin can be also driven directly by an optocoupler to control PWM by modulating the current sunk from the pin (with the INV pin grounded).
3	VFF	Line voltage feedforward. The information on the converter's input voltage is fed into the pin through a resistor divider and is used to change the setpoint of the pulse-by-pulse current limitation (the higher the voltage, the lower the setpoint). If this function is not desired the pin will be grounded and the current limitation setpoint will be maximum.
4	CS	Input to the PWM comparator. The primary current is sensed through a resistor, the resulting voltage is applied to this pin and compared with an internal reference to determine MOSFET's turn-off. The internal reference is clamped at a value, which defines the pulse-by-pulse current limitation setpoint, depending on the voltage at pin VFF. If the signal at the pin CS exceeds 2 V, the gate driver will be disabled (Hiccup-mode OCP).
5	ZCD	Transformer's demagnetization sensing input for Quasi-Resonant operation. Alternately, synchronization input for an external signal. A negative-going edge triggers MOSFET's turn-on. The trigger circuit is blanked for a minimum of 3.5 µs after MOSFET turn-off, for safe operation under short circuit conditions and frequency foldback. If the pin is grounded the IC will be disabled.
6	GND	Ground. Current return for both the signal part of the IC and the gate driver.
7	GD	Gate driver output. The totem pole output stage is able to drive power MOSFET's and IGBT's with a peak current of 400 mA (source and sink).
8	Vcc	Supply Voltage of both the signal part of the IC and the gate driver. An electrolytic capacitor is connected between this pin and ground. A resistor connected from this pin to the converter's input bulk capacitor will be typically used to start up the device.

L6565 Block Diagram

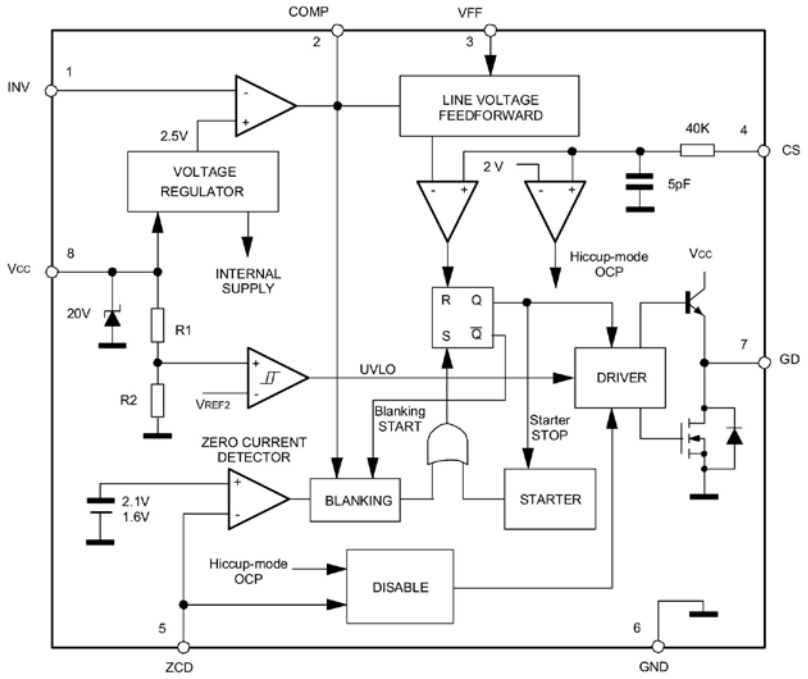

ICE3BR1765J (SMPS : IC871)

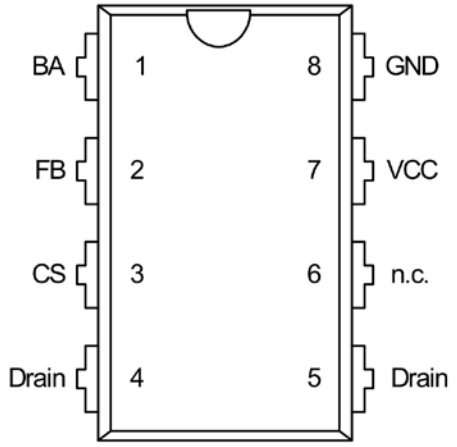

Pin	Symbol	Function
1	BA	extended Blanking & Auto-restart
2	FB	FeedBack
3	CS	Current Sense/ 650V[1)] CoolMOS® Source
4	Drain	650V[1)] CoolMOS® Drain
5	Drain	650V[1)] CoolMOS® Drain
6	n.c.	Not connected
7	VCC	Controller Supply Voltage
8	GND	Controller GrouND

[1)] at T_j=110°C

ICE3BR1765J Block Diagram

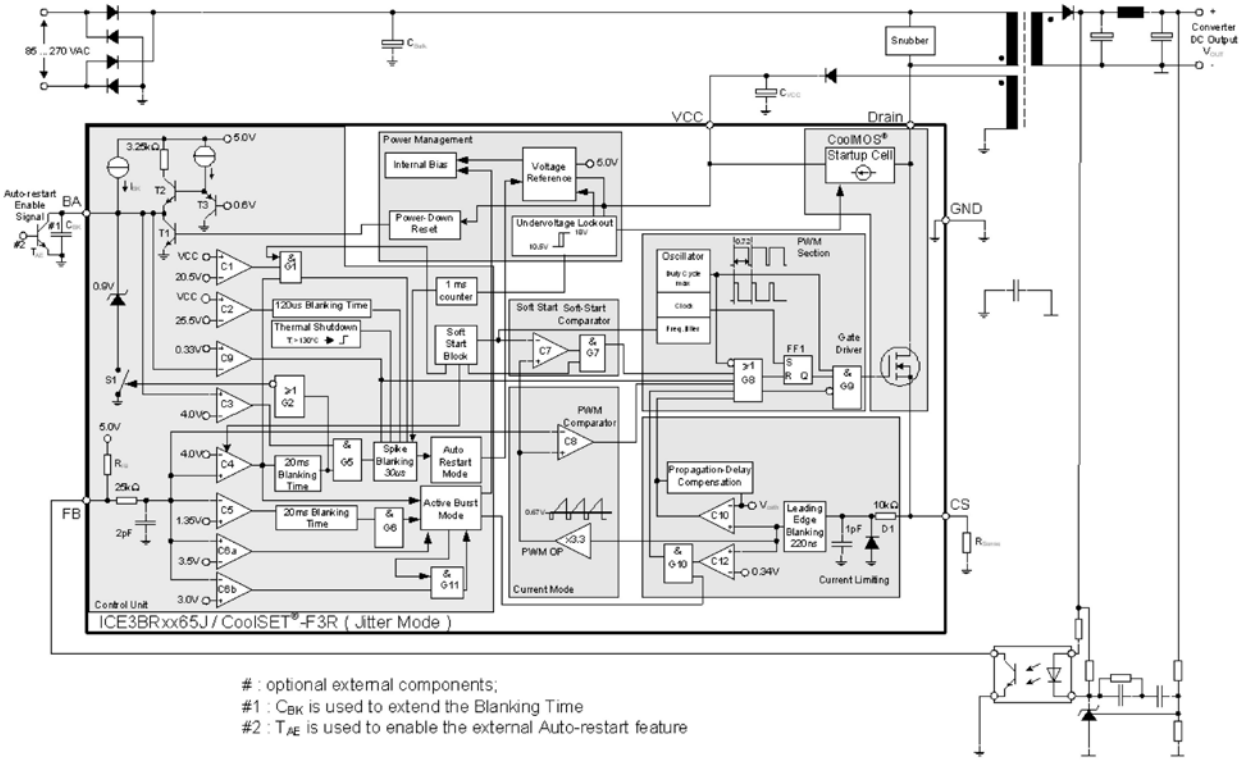

: optional external components;
#1 : C_{BK} is used to extend the Blanking Time
#2 : T_{AE} is used to enable the external Auto-restart feature

2. DISPLAY

S020-MXS4035A-3 (DISPLAY : CP661)

端子番号 Pin No.	端子名 Pin Name	入出力 IO	機能 Functions
1	VSS	P	グランド GND
2	VCC	P	ドライバー系陽極電源 Power supply for Anode Driver
3	VCOMH	O	ドライバー系陰極電源 Power supply for Cathode Driver
4	VLSS	P	アナロググランド Analog system ground
5	CLS	I	VDDIO に接続 Connected to VDDIO
6	D7	I	データバス Data Bus
7	D6	I	データバス Data Bus
8	D5	I	データバス Data Bus
9	D4	I	データバス Data Bus
10	D3	I	データバス Data Bus
11	D2	I	データバス Data Bus
12	D1 (SDIN)	I	データバス、またはシリアルデータ入力 Data Bus or Serial Date Input
13	D0 (SCLK)	I	データバス、またはシリアルクロック入力 Data Bus or Serial Clock Input
14	E, RD#	I	読み出し（シリアルインターフェース時、内部で "L" 固定になる） Read (This pin stays "L"(low) in Serial Interface Mode)
15	R/W#, WR#	I	書き込み（シリアルインターフェース時、内部で "L" 固定になる） Write (This pin stays "L"(low) in Serial Interface Mode)
16	BS0	I	インターフェース選択子 Select MCU bus interface setting ・BS0=0, BS1=0 : 4 line SPI ・BS0=0, BS1=1 : 8bit 8080 Parallel ・BS0=1, BS1=0 : 3 line SPI ・BS0=1, BS1=1 : 8bit 6800 Parallel
17	BS1	I	
18	D/C#	I	データ/コマンド切替制御 "H":データ, "L":コマンド Data/Command Control. "H":Data, "L":Command
19	CS#	I	チップセレクト "L" でI/F通信可能 Chip Select, Active "L"
20	RES#	I	リセット "L"でリセット Reset, Active "L"
21	VSS	P	グランド GND
22	CL	I	VSSに接続してください。 Connected to VSS
23	IREF	O	陽極出力基準電流設定端子 Reference current setting
24	NC	-	
25	VDDIO	P	インターフェイス系電源 Power supply for Interface logic level
26	VDD	O	内部ロジック系電源 Power supply for Core logic operation
27	VCI	P	外部ロジック系電源 Low voltage power supply
28	VSL	P	陽極基準電位 Segment Reference voltage
29	VLSS	P	アナロググランド Analog system ground
30	VCC	P	ドライバー系陽極電源 Power supply for Anode Driver

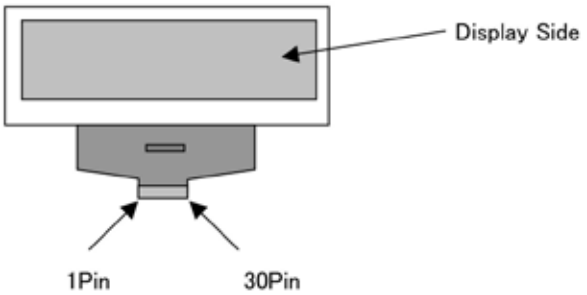

PARTS LIST OF P.C.B. UNIT

Please refer to the last chapter.

∗Parts indicated by "nsp" on this table cannot be supplied.

∗The parts listed below are only for maintenance. Therefore they might differ from the parts used in the unit in appearances or dimensions.

Personal notes:

PARTS LIST OF P.W.B. UNIT
FRONT P.W.B. UNIT ASS'Y

NOTE: The symbols in the column "Remarks" indicate the following destinations.
E2 : Europe model E3 : US & Canada model JP : Japan model E1C : China model

	Ref. No.	Part No.	Part Name	Remarks		Q'ty	New	Ver
	SEMICONDUCTORS GROUP							
	D601	00D9630355401	D,SWITCHING CHIP KDS4148U FAST SWITCHING SOD-323(USC)		K005041480030S	1		
	D631,632	00D9630355401	D,SWITCHING CHIP KDS4148U FAST SWITCHING SOD-323(USC)		K005041480030S	1		
	D661	963202500260S	D,ZENER CHIP 0.2W 2.7V UDZV SERIES (UMD2 TYPE)		K06602R76P400S	1		
	Q601,602	00D9600296309	SEMI,CHIP TR/NPN 2SC KRC111S (NM) 0.2W/SOT-23 REEL		J522011100210S	1		
	LD601	963263100700S	LED,ROUND WEJ3PBWW-C02-ZD 3PI WHITE P=2.54 BULK		K500039001110S	1		
	LD602	963263100510S	LED,ROUND WEJ3290W-R2H0-BA 3PI RED/YELLOW GREEN BI-COLOR		K500032451010S	1		
	RESISTORS GROUP							
	R601	nsp	R,CHIP THICK 0-J,1/16W-1608REEL		C20000006M160S	1		
	R602	nsp	R,CHIP THICK 150-J,1/16W-1608REEL		C20001516M160S	1		
	R604	nsp	R,CHIP THICK 47K-J,1/16W-1608REEL		C20004736M160S	1		
	R605	nsp	R,CHIP THICK 0-J,1/16W-1608REEL		C20000006M160S	1		
	R606	nsp	R,CHIP THICK 110-J,1/16W-1608REEL		C20001116M160S	1		
	R608	nsp	R,CHIP THICK 150-J,1/16W-1608REEL		C20001516M160S	1		
	R609	nsp	R,CHIP THICK 0-J,1/16W-1608REEL		C20000006M160S	1		
	R610	nsp	R,CHIP THICK 270-J,1/16W-1608REEL		C20002716M160S	1		
	R611	nsp	R,CHIP THICK 180-J,1/16W-1608REEL		C20001816M160S	1		
	R612	nsp	R,CHIP THICK 270-J,1/16W-1608REEL		C20002716M160S	1		
	R613	nsp	R,CHIP THICK 150-J,1/16W-1608REEL		C20001516M160S	1		
	R614	nsp	R,CHIP THICK 180-J,1/16W-1608REEL		C20001816M160S	1		
	R615	nsp	R,CHIP THICK 270-J,1/16W-1608REEL		C20002716M160S	1		
	R616	nsp	R,CHIP THICK 150-J,1/16W-1608REEL		C20001516M160S	1		
	R617	nsp	R,CHIP THICK 0-J,1/16W-1608REEL		C20000006M160S	1		
	R644	nsp	R,CHIP THICK 2.2K-J,1/16W-1608REEL		C20002226M160S	1		
	R647,648	nsp	R,CHIP THICK 0-J,1/16W-1608REEL		C20000006M160S	1		
	R649,650	nsp	R,CHIP THICK 470-J,1/16W-1608REEL		C20004716M160S	1		
	R651,652	nsp	R,CHIP THICK 47K-J,1/16W-1608REEL		C20004736M160S	1		
	R653	nsp	R,CHIP THICK 0-J,1/16W-1608REEL		C20000006M160S	1		
	R661	nsp	R,CHIP THICK 10K-J,1/16W-1608REEL		C20001036M160S	1		
	R662	nsp	R,CHIP THICK 1M-J,1/16W-1608REEL		C20001056M160S	1		
	R663	nsp	R,CHIP THICK 0-J,1/16W-1608REEL		C20000006M160S	1		
	CAPACITORS GROUP							
	C388-391	nsp	C,CERAMIC CHIP T.C COG100PF-J/50V-1608REEL		D010101167160S	1		
	C601-605	nsp	C,CERAMIC CHIP HIK X7R)0.1UF-K/25V-1608REEL		D011104774161S	1		
	C631,632	nsp	C,CERAMIC CHIP HIK X7R)0.1UF-K/25V-1608REEL		D011104774161S	1		
	C633,634	nsp	C,CERAMIC CHIP HIK X7R0.027UF-K/50V-1608REEL		D011273777163S	1		
	C641	nsp	C,CERAMIC CHIP T.C X7R 1000PF-K/50V-1608REEL		D010102777160S	1		
	C643	nsp	C,CERAMIC CHIP HIK X7R0.01UF-K/50V-1608REEL		D011103777160S	1		
	C645,646	nsp	C,CERAMIC CHIP HIK X7R)0.1UF-K/25V-1608REEL		D011104774161S	1		
	C647	nsp	C,CERAMIC CHIP HIK X7R0.01UF-K/50V-1608REEL		D011103777160S	1		
	C654-657	nsp	C,CERAMIC CHIP T.C COG100PF-J/50V-1608REEL		D010101167160S	1		
	C658	nsp	C,CERAMIC CHIP HIK X7R0.01UF-K/50V-1608REEL		D011103777160S	1		
	C659	nsp	C,CERAMIC CHIP HIK X7R)0.1UF-K/25V-1608REEL		D011104774161S	1		
	C661	00D9630333300	C,ELECT GE 85C 47UF-M/16V,6.3*5-5RE.SRE SY		D040470083070S	1		
	C662	nsp	C,CERAMIC CHIP HIK X7R)0.1UF-K/25V-1608REEL		D011104774161S	1		
	C663	nsp	C,CERAMIC CHIP HIK Y5V1UF-Z/50V-1608REEL		D011105597160S	1		
	C664	nsp	C,CERAMIC CHIP HIK X7R)4.7UF-K/6.3V-1608REEL		D011475571160S	1		
	C665	nsp	C,CERAMIC CHIP HIK X7R)0.1UF-K/25V-1608REEL		D011104774161S	1		
	C666	00D9630130202	C,ELECT GE 85C 10UF-M/35V,5*5-5RE.SY		D040100085070S	1		
	C667	nsp	C,CERAMIC CHIP T.C X7R 1000PF-K/50V-1608REEL		D010102777160S	1		
	C668,669	nsp	C,CERAMIC CHIP HIK Y5V1UF-Z/50V-1608REEL		D011105597160S	1		
	C670	nsp	C,CERAMIC CHIP HIK X7R)0.1UF-K/25V-1608REEL		D011104774161S	1		
	C671	nsp	C,CERAMIC CHIP HIK X7R0.01UF-K/50V-1608REEL		D011103777160S	1		
	C672	nsp	C,CERAMIC CHIP HIK X7R)0.1UF-K/25V-1608REEL		D011104774161S	1		
	C673	nsp	C,CERAMIC CHIP HIK X7R0.01UF-K/50V-1608REEL		D011103777160S	1		
	C674	nsp	C,CERAMIC CHIP HIK X7R)0.1UF-K/25V-1608REEL		D011104774161S	1		
	C675	00D9630130202	C,ELECT GE 85C 10UF-M/35V,5*5-5RE.SY		D040100085070S	1		
	C676,677	nsp	C,CERAMIC CHIP HIK X5R)4.7UF-K/25V-2012REEL GRM21BR61E475KA12L MURATA		D011475774200S	1		
	C678-680	nsp	C,CERAMIC CHIP T.C COG47PF-J/50V-1608REEL		D010470167160S	1		
	C681	nsp	C,CERAMIC CHIP T.C COG100PF-J/50V-1608REEL		D010101167160S	1		
	C682	nsp	C,CERAMIC CHIP T.C X7R 1000PF-K/50V-1608REEL		D010102777160S	1		
	C683	nsp	C,CERAMIC CHIP T.C COG100PF-J/50V-1608REEL		D010101167160S	1		
	C684	nsp	C,CERAMIC CHIP T.C X7R 1000PF-K/50V-1608REEL		D010102777160S	1		
	OTHERS PARTS GROUP							
	BKT3-5	nsp	BRACKET AVR133(HARMAN) BURRING HOLE SPTE 0.8t/SCREW		4010210196100S	1		
	CLP301	nsp	CLAMP HMX9800(ON)(HAITAI) (W=2.6,L=50)/WIRE(SOLDER)		4330000120000S	1		
	CN641	nsp	CN,WIRE 2MM 280MM/6P 20010HS-06=CKM2002HV-06 RD2725#24,28 SHLD		L002281060190S	1		
	CN661	nsp	CN.FPC 1.0MM 1.0-11-29P ST DIP		L130100112910S	1		
	CP305	nsp	CN.WAFER C125Z2-29 29P BtoB SOCKET(FEMALE) P=1.25MM		L109012522920S	1		
	CP306	nsp	CN.WAFER C125Z1-29 29P BtoB HEADER(MALE) P=1.25MM		L109012512920S	1		
	CP631	nsp	CN,WIRE 2MM 250MM/7P 20010HS-07=CKM2002HV-07 RD2725#26 SHLD		L002251070190S	1		
	CP661	nsp	CN.FPC 1.0MM 1.0S-12X-30PW 30P AN DIP BOTTOM CONTACT		L130100123020S	1		
	J610	nsp	BEAD,COIL BFS 3550AOL 3.5*5.0 AXIAL 52REEL		7610035500040S	1		
	J620	nsp	R,CHIP THICK 0-J,1/16W-1608REEL		C20000006M160S	1		
	J638	nsp	R,CHIP THICK 0-J,1/10W-2012REEL		C200000060200S	1		
	JACK641	963649010300S	CN,PLUG CONTACT USB A TYPE FEMALE DIP4P BK USBAS-00401B014-G		G480040101410S	1		
	JK631,632	963643102240S	JACK,D3.5 HTJ035-18AB(SILVER)		G401035180020S	1		
	L650-655	nsp	COIL,BEAD HB-1T1608-102JT 1000ohm SMD1608 TYPE		D340160821020S	1		
	L661,662	nsp	COIL,BEAD CBW201209U121T 120ohm SMD2012 TYPE		D340201221210S	1		
	RMC601	963262011220S	MODULE,REMOCON R34FS8A 38KHZ IR REMOCON MODULE P=2.54MM H=11MM		E940348003810S	1		
	S601-610	00D9630095305	SW,TACT SKHV10910D01 KB581/LG 160G		G180040500010S	1		
	★	nsp	P.C.B RCDN8 330*247 FR1 ARRY(2) 1.6T/FRONT		7020072650000S	1		
	★	nsp	SUPPORTER DRAN5WTE2 Ⓒ4.0*1(H) KangYang LEDS-1 /LED		4070212213000S	1		

PARTS LIST OF P.W.B. UNIT
MAIN P.W.B. UNIT ASS'Y

NOTE: The symbols in the column "Remarks" indicate the following destinations.
E2 : Europe model E3 : US & Canada model JP : Japan model E1C : China model

	Ref. No.	Part No.	Part Name	Remarks		Q'ty	New	Ver
	SEMICONDUCTORS GROUP							
	D103,104	00D9630355401	D,SWITCHING CHIP KDS4148U FAST SWITCHING SOD-323(USC)		K005041480030S	1		
	D105	00D2760846900	D,SCHOTTKY RB060M-30 SCHOTTKY BARRIER DIODE 3516 REEL		K120060300010S	1		
	D106	00D9630328409	D,SWITCHING 1N4007 52REEL 1000V 1A		K000400700010S	1		
	D108-115	00D9630355401	D,SWITCHING CHIP KDS4148U FAST SWITCHING SOD-323(USC)		K005041480030S	1		
	D282	00D9630355401	D,SWITCHING CHIP KDS4148U FAST SWITCHING SOD-323(USC)		K005041480030S	1		
	D283	00D9630328409	D,SWITCHING 1N4007 52REEL 1000V 1A		K000400700010S	1		
	D284	00D2760846900	D,SCHOTTKY RB060M-30 SCHOTTKY BARRIER DIODE 3516 REEL		K120060300010S	1		
	D285	00D9630328409	D,SWITCHING 1N4007 52REEL 1000V 1A		K000400700010S	1		
	D286	00D2760846900	D,SCHOTTKY RB060M-30 SCHOTTKY BARRIER DIODE 3516 REEL		K120060300010S	1		
	D287,288	00D9630328409	D,SWITCHING 1N4007 52REEL 1000V 1A		K000400700010S	1		
	D401,402	00D9630328409	D,SWITCHING 1N4007 52REEL 1000V 1A		K000400700010S	1		
	D403,404	00D9630355401	D,SWITCHING CHIP KDS4148U FAST SWITCHING SOD-323(USC)		K005041480030S	1		
	D405	nsp	D,SWITCHING CHIP 1SS355USM(A)		K005035500010S	1		
	D406,407	00D9630355401	D,SWITCHING CHIP KDS4148U FAST SWITCHING SOD-323(USC)		K005041480030S	1		
	D705	00D9630355401	D,SWITCHING CHIP KDS4148U FAST SWITCHING SOD-323(USC)		K005041480030S	1		
	D901	00D9630355401	D,SWITCHING CHIP KDS4148U FAST SWITCHING SOD-323(USC)		K005041480030S	1		
	D902	nsp	D,SWITCHING CHIP 1SS355USM(A)		K005035500010S	1		
	IC102	963239007790M	IC,LINEAR-REGULATOR IL1117_5.0 SOT-223 5.0V 1A LOW DROPOUT		J126111750010S	1		
	IC103	23681014050AS	IC,LOGIC-INTERFACE PCM9211 TRANSCEIVER LQFP48		J046921100010S	1		
	IC104	963231101310S	IC,LINEAR-REGULATOR KIA78R33F 3.3V LOW DROP 1A DPAK-5		J126781330050S	1		
	IC108	00MHC12273370	IC,ANALOG TAS5508CPAGR TQFP64 8CH DIGIT AUDIO PWM PROCESSOR		J080550800010S	1		
	IC110	00D2630995004	IC,LINEAR OP AZ4580MTR-E1 CU(C1:A~J) SOIC-8P OP AMP		J121458001020S	1		
	IC114	00D2630995004	IC,LINEAR OP NJM4556AM HEADPHONE AMP DMP8 300MW		J121455600010S	1		
	IC118	00D2623503911	IC,ANALOG TAS5142DKDR PSOP36 STEREO DIGITAL AMP POWER STAGE		J080514200010S	1		
	IC282	00D2631213905	IC,LINEAR-REGULATOR KIA7808AF 8V 1A DPAK		J126780800250S	1		
	IC301	23681012450AS	IC,LINEAR-DRIVER NCP380HMU15AATBG UDFN6		J127380150010S	1		
	IC303,304	963233100050S	IC,LOGIC TC7USB221FT(EL,M) USB SW TSSOP14		J040702215510S	1		
	IC306-308	963231101300S	IC,LOGIC-D/D CONVER AP3503E 340kHz 3A DC-DC BUCK CONVERTER PSOP8		J048350300010S	1		
	IC309	nsp	IC,LOGIC-DECODER MFI337S3959 COPROCESSOR(IPOD) DENON SAGUB		J044337395910S	1		
	IC310	23681012450AS	IC,LINEAR-DRIVER NCP380HMU15AATBG UDFN6		J127380150010S	1		
	IC401	963231101310S	IC,LINEAR-REGULATOR KIA78R33F 3.3V LOW DROP 1A DPAK-5		J126781330050S	1		
	IC402	00D2631242905	IC,LINEAR-REGULATOR NJM2831F33 3.3V 0.13A LDO WITH ON/OFF SOT-23-5P		J126283133010S	1		
	IC403	963243101500S	R5F56108VNFP RCD-N8 E2/JP	E2,JP	8952500000060	1	*	Ver.4
	IC403	963243101480S	R5F56108VNFP RCD-N8 E1C	E1C	8952500000070	1	*	Ver.4
	IC404	963239100780S	IC,LINEAR-RESET NCP300LSN30T1 TSOP-5		J125030050010S	1		
	IC405	943239100720S	IC,MEMORY-EEPROM R1EX24256BSAS0A 256Kbit SERIAL SOP8 RENESAS		J000242565570S	1		
	IC406	00MHC12252090	IC,LINEAR-REGULATOR NJM2387ADL3 1A 0.2V TO252-5 LOW DROP VOL REGULATOR		J126238700010S	1		
	IC701	963239100920S	IC,LOGIC-INTERFACE NJM2755V/SSOP16 4-IN/1-OUT STEREO AUDIO SELECTOR		J046275505310S	1		
	IC901	963231101210S	IC,LINEAR-REGULATOR IL1117-1.5 SOT-223 1.5V 1A LOW DROPOUT		J126111715070S	1		
	IC902	24501001500S	IC,LOGIC-DECODER TC94A92FG-301 LQFP80 CD HEAD AMP AND AUDIO DECODER		J044949200010S	1		
	IC903	23981000350AS	IC,LINEAR-DRIVER IP4001CR 28SSOPH-375 TUBE 5CH MOTOR DRIVE 5V REG		J127400100010S	1		
	Q105	00D9630121606	SEMI,CHIP TR/NPN 2SC KRC107S (NH)/SOT-23 REEL		J522107S00210S	1		
	Q106	90M-BA001600R	SEMI,CHIP TR/PNP 2SA KRA107S (PH) /SOT-23 REEL		J5200107S0050S	1		
	Q107	00D9630121606	SEMI,CHIP TR/NPN 2SC KRC107S (NH)/SOT-23 REEL		J522107S00210S	1		
	Q108	90M-BA001600R	SEMI,CHIP TR/PNP 2SA KRA107S (PH) /SOT-23 REEL		J5200107S0050S	1		
	Q110,111	00D2690192902	SEMI,CHIP TR/NPN 2SC KRC102S (NB) 0.2W/SOT-23 REEL		J522010200210S	1		
	Q112,113	90M-BA001600R	SEMI,CHIP TR/PNP 2SA KRA107S (PH) /SOT-23 REEL		J5200107S0050S	1		
	Q114,115	00D2690192902	SEMI,CHIP TR/NPN 2SC KRC102S (NB) 0.2W/SOT-23 REEL		J522010200210S	1		
	Q116	00D9630066606	SEMI,CHIP TR/NPN 2SC KTC3875Y(ALY) 0.15W/SMT-REEL		J5223875Y0210S	1		
	Q117,118	00D9630148508	SEMI,CHIP TR/PNP 2SA KTA1504S-Y 0.15W SOT-23 REEL		J520015040150S	1		
	Q119	00D9630066606	SEMI,CHIP TR/NPN 2SC KTC3875Y(ALY) 0.15W/SMT-REEL		J5223875Y0210S	1		
	Q120-125	00D2730460905	SEMI,CHIP TR/NPN 2SC KTC2875B(MB) 0.15W/LOW-ON-RES SOT23(RTK)		J5222875B0010S	1		
	Q126	90M-BA001600R	SEMI,CHIP TR/PNP 2SA KRA107S (PH) /SOT-23 REEL		J5200107S0050S	1		
	Q127	00D9630121606	SEMI,CHIP TR/NPN 2SC KRC107S (NH)/SOT-23 REEL		J522107S00210S	1		
	Q303	00D2690184907	SEMI,CHIP TR/PNP 2SA KRA102S(PB) 0.2W/SOT-23 REEL		J520010200210S	1		
	Q304	00D2690192902	SEMI,CHIP TR/NPN 2SC KRC102S (NB) 0.2W/SOT-23 REEL		J522010200210S	1		
	Q403	00D2690192902	SEMI,CHIP TR/NPN 2SC KRC102S (NB) 0.2W/SOT-23 REEL		J522010200210S	1		
	Q405	00D2690192902	SEMI,CHIP TR/NPN 2SC KRC102S (NB) 0.2W/SOT-23 REEL		J522010200210S	1		
	Q406	00D2690184907	SEMI,CHIP TR/PNP 2SA KRA102S(PB) 0.2W/SOT-23 REEL		J520010200210S	1		
	Q701	00D2690192902	SEMI,CHIP TR/NPN 2SC KRC102S (NB) 0.2W/SOT-23 REEL		J522010200210S	1		
	Q901	00D9630148508	SEMI,CHIP TR/PNP 2SA KTA1504S-Y 0.15W SOT-23 REEL		J520015040150S	1		
	RESISTORS GROUP							
	R101-104	nsp	R,CHIP THICK 100-J,1/16W-1608REEL		C20001016M160S	1		
	R105	nsp	R,CHIP THICK 1K-J,1/16W-1608REEL		C20001026M160S	1		
	R106	nsp	R,CHIP THICK 0-J,1/16W-1608REEL		C20000006M160S	1		
	R109	nsp	R,CHIP THICK 10K-J,1/16W-1608REEL		C20001036M160S	1		
	R111	nsp	R,CHIP THICK 33-J,1/16W-1608REEL		C20003306M160S	1		
	R114	nsp	R,CHIP THICK 1M-J,1/16W-1608REEL		C20001056M160S	1		
	R115	nsp	R,CHIP THICK 1K-J,1/16W-1608REEL		C20001026M160S	1		
	R116-118	nsp	R,CHIP THICK 47-J,1/16W-1608REEL		C20004706M160S	1		
	R119	nsp	R,CHIP THICK 680-J,1/16W-1608REEL		C20006816M160S	1		
	R120	nsp	COIL,BEAD HB-1M1608-301JT 300ohm SMD1608 TYPE		D340160803010S	1		
	R122,123	nsp	R,CHIP THICK 0-J,1/16W-1608REEL		C20000006M160S	1		
	R131	nsp	R,CHIP THICK 1K-J,1/16W-1608REEL		C20001026M160S	1		
	R132	nsp	R,CHIP THICK 3.3-J,1/16W-1608REEL		C2003R306M161S	1		
	R133	nsp	R,CHIP THICK 10K-J,1/16W-1608REEL		C20001036M160S	1		
	R135	nsp	R,CHIP THICK 10K-J,1/16W-1608REEL		C20001036M160S	1		
	R136,137	nsp	R,CHIP THICK 200-J,1/16W-1608REEL		C20002016M160S	1		
	R138	nsp	R,CHIP THICK 2.2-J,1/16W-1608REEL		C2002R206M160S	1		
	R139	nsp	R,CHIP THICK 10K-J,1/16W-1608REEL		C20001036M160S	1		
	R140-142	nsp	R,CHIP THICK 33-J,1/16W-1608REEL		C20003306M160S	1		
	R143	nsp	R,CHIP THICK 0-J,1/16W-1608REEL		C20000006M160S	1		
	R144	nsp	R,CHIP THICK 1-J,1/16W-1608REEL		C20000106M160S	1		
	R145	nsp	R,CHIP THICK 33-J,1/16W-1608REEL		C20003306M160S	1		
	R146	nsp	R,CHIP THICK 0-J,1/16W-1608REEL		C20000006M160S	1		
	R147	nsp	R,CHIP THICK 1M-J,1/16W-1608REEL		C20001056M160S	1		
	R148-151	nsp	R,CHIP THICK 0-J,1/16W-1608REEL		C20000006M160S	1		
	R152	nsp	R,CHIP THICK 33-J,1/16W-1608REEL		C20003306M160S	1		
	R153	nsp	R,CHIP THICK 22-J,1/16W-1608REEL		C20002206M160S	1		
	R154-156	nsp	R,CHIP THICK 33-J,1/16W-1608REEL		C20003306M160S	1		
	R157	nsp	R,CHIP THICK 0-J,1/16W-1608REEL		C20000006M160S	1		
	R158	nsp	R,CHIP THICK 100K-J,1/16W-1608REEL		C20001046M160S	1		
	R159	nsp	R,CHIP THICK 33-J,1/16W-1608REEL		C20003306M160S	1		
	R160,161	nsp	R,CHIP THICK 0-J,1/16W-1608REEL		C20000006M160S	1		
	R161	nsp	R,CHIP THICK 100K-J,1/16W-1608REEL		C20001046M160S	1		
	R162	nsp	R,CHIP THICK 4.7K-J,1/16W-1608REEL		C20004726M160S	1		
	R163	nsp	R,CHIP THICK 100K-J,1/16W-1608REEL		C20001046M160S	1		
	R164,165	nsp	R,CHIP THICK 2.2K-J,1/16W-1608REEL		C20002226M160S	1		
	R166	nsp	R,CHIP THICK 0-J,1/16W-1608REEL		C20000006M160S	1		
	R167-171	nsp	COIL,BEAD HB-1T1608-102JT 1000ohm SMD1608 TYPE		D340160821020S	1		
	R172,173	nsp	R,CHIP THICK 10K-J,1/16W-1608REEL		C20001036M160S	1		
	R174	nsp	R,CHIP THICK 27K-J,1/16W-1608REEL		C20002736M160S	1		
	R175-178	nsp	R,CHIP THICK 10-J,1/16W-1608REEL		C20001006M160S	1		
	R179-182	nsp	R,CHIP THICK 18-F,1/10W-2012REEL		C200018040200S	1		

	Ref. No.	Part No.	Part Name	Remarks		Q'ty	New	Ver
	R183-186	nsp	R,CHIP THICK 3.3-J,1/16W-1608REEL		C2003R306M161S	1		
	R187-190	nsp	R,CHIP THICK 2.2K-J,1/16W-1608REEL		C20002226M160S	1		
	R191	nsp	R,FIXED,M.O. RSD-R0-1WJ-91 3.2*8.5 P=5MM SMALL R.REEL		N113135691020S	1		
	R192,193	nsp	R,CHIP THICK 2.2K-J,1/16W-1608REEL		C20002226M160S	1		
	R194	nsp	R,FIXED,M.O. RSD-R0-1WJ-91 3.2*8.5 P=5MM SMALL R.REEL		N113135691020S	1		
	R195-200	nsp	R,CHIP THICK 4.7K-J,1/16W-1608REEL		C20004726M160S	1		
	R201,202	nsp	R,CHIP THICK 39K-J,1/16W-1608REEL		C20003936M160S	1		
	R203	nsp	R,CHIP THICK 100-J,1/16W-1608REEL		C20001016M160S	1		
	R204,205	nsp	R,CHIP THICK 10K-J,1/16W-1608REEL		C20001036M160S	1		
	R206	nsp	R,CHIP THICK 4.7K-J,1/16W-1608REEL		C20004726M160S	1		
	R207	nsp	R,CHIP THICK 100-J,1/16W-1608REEL		C20001016M160S	1		
	R208	nsp	R,CHIP THICK 10-J,1/16W-1608REEL		C20001006M160S	1		
	R209-214	nsp	R,CHIP THICK 4.7K-J,1/16W-1608REEL		C20004726M160S	1		
	R215,216	nsp	R,CHIP THICK 39K-J,1/16W-1608REEL		C20003936M160S	1		
	R217	nsp	R,CHIP THICK 10K-J,1/16W-1608REEL		C20001036M160S	1		
	R218	nsp	R,CHIP THICK 100-J,1/16W-1608REEL		C20001016M160S	1		
	R219	nsp	R,CHIP THICK 10K-J,1/16W-1608REEL		C20001036M160S	1		
	R220	nsp	R,CHIP THICK 4.7K-J,1/16W-1608REEL		C20004726M160S	1		
	R221	nsp	R,CHIP THICK 100-J,1/16W-1608REEL		C20001016M160S	1		
	R222	nsp	R,CHIP THICK 10-J,1/16W-1608REEL		C20001006M160S	1		
	R223,224	nsp	R,CHIP THICK 0-J,1/16W-1608REEL		C20000006M160S	1		
	R225,226	nsp	R,CHIP THICK 22K-J,1/16W-1608REEL		C20002236M160S	1		
	R227,228	nsp	R,CHIP THICK 1K-J,1/16W-1608REEL		C20001026M160S	1		
	R229,230	nsp	R,CHIP THICK 47K-J,1/16W-1608REEL		C20004736M160S	1		
	R231	nsp	R,CHIP THICK 1K-J,1/16W-1608REEL		C20001026M160S	1		
	R232	nsp	R,CHIP THICK 10K-J,1/16W-1608REEL		C20001036M160S	1		
	R233	nsp	R,CHIP THICK 4.7K-J,1/16W-1608REEL		C20004726M160S	1		
	R234	nsp	R,CHIP THICK 1K-J,1/16W-1608REEL		C20001026M160S	1		
	R235	nsp	R,CHIP THICK 10K-J,1/16W-1608REEL		C20001036M160S	1		
	R238-243	nsp	R,CHIP THICK 0-J,1/16W-1608REEL		C20000006M160S	1		
	R244,245	nsp	R,CHIP THICK 100K-J,1/16W-1608REEL		C20001046M160S	1		
	R246	nsp	R,CHIP THICK 47K-J,1/16W-1608REEL		C20004736M160S	1		
	R247,248	nsp	R,CHIP THICK 100K-J,1/16W-1608REEL		C20001046M160S	1		
	R249,250	nsp	R,CHIP THICK 150K-J,1/16W-1608REEL		C20001546M160S	1		
	R251	nsp	R,CHIP THICK 10K-J,1/16W-1608REEL		C20001036M160S	1		
	R252,253	nsp	R,CHIP THICK 150K-J,1/16W-1608REEL		C20001546M160S	1		
	R254,255	nsp	R,CHIP THICK 0-J,1/16W-1608REEL		C20000006M160S	1		
	R274,275	nsp	R,CHIP THICK 0-J,1/16W-1608REEL		C20000006M160S	1		
	R276	nsp	R,CHIP THICK 100-J,1/16W-1608REEL		C20001016M160S	1		
	R277	nsp	R,CHIP THICK 0-J,1/8W-3216REEL		C200000061300S	1		
	R278-281	nsp	R,CHIP THICK 0-J,1/16W-1608REEL		C20000006M160S	1		
	R282-285	nsp	R,CHIP THICK 0-J,1/10W-2012REEL		C200000060200S	1		
	R286,287	nsp	R,CHIP THICK 1K-J,1/16W-1608REEL		C20001026M160S	1		
	R288	nsp	R,CHIP THICK 1-J,1/16W-1608REEL		C20000106M160S	1		
	R289,290	nsp	R,CHIP THICK 0-J,1/8W-3216REEL		C200000061300S	1		
	R291,292	nsp	R,CHIP THICK 0-J,1/10W-2012REEL		C200000060200S	1		
	R293	nsp	R,CHIP THICK 0-J,1/8W-3216REEL		C200000061300S	1		
	R294-299	nsp	R,CHIP THICK 0-J,1/10W-2012REEL		C200000060200S	1		
	R300	nsp	R,CHIP THICK 0-J,1/16W-1608REEL		C20000006M160S	1		
	R302	nsp	R,CHIP THICK 10K-J,1/16W-1608REEL		C20001036M160S	1		
	R304	nsp	R,CHIP THICK 10K-J,1/16W-1608REEL		C20001036M160S	1		
	R305	nsp	R,CHIP THICK 47K-J,1/16W-1608REEL		C20004736M160S	1		
	R306	nsp	R,CHIP THICK 27K-J,1/16W-1608REEL		C20002736M160S	1		
	R307	nsp	R,CHIP THICK 75K-J,1/16W-1608REEL		C20007536M160S	1		
	R309	nsp	R,CHIP THICK 120K-J,1/16W-1608REEL		C20001246M160S	1		
	R311	nsp	R,CHIP THICK 75K-J,1/16W-1608REEL		C20007536M160S	1		
	R312	nsp	R,CHIP THICK 47K-J,1/16W-1608REEL		C20004736M160S	1		
	R314	nsp	R,CHIP THICK 27K-J,1/16W-1608REEL		C20002736M160S	1		
	R315	nsp	R,CHIP THICK 120K-J,1/16W-1608REEL		C20001246M160S	1		
	R319-322	nsp	R,CHIP THICK 0-J,1/16W-1608REEL		C20000006M160S	1		
	R324,325	nsp	R,CHIP THICK 0-J,1/16W-1608REEL		C20000006M160S	1		
	R326	nsp	R,CHIP THICK 10K-J,1/16W-1608REEL		C20001036M160S	1		
	R327	nsp	R,CHIP THICK 3.9K-J,1/16W-1608REEL		C20003926M160S	1		
	R328	nsp	R,CHIP THICK 100-J,1/16W-1608REEL		C20001016M160S	1		
	R329	nsp	R,CHIP THICK 820K-F,1/16W-1608REEL		C20008244M160S	1		
	R330	nsp	R,CHIP THICK 10K-J,1/16W-1608REEL		C20001036M160S	1		
	R331	nsp	R,CHIP THICK 3.9K-J,1/16W-1608REEL		C20003926M160S	1		
	R332	nsp	R,CHIP THICK 100-J,1/16W-1608REEL		C20001016M160S	1		
	R333	nsp	R,CHIP THICK 100K-F,1/16W-1608REEL		C20001044M160S	1		
	R334	nsp	R,CHIP THICK 10K-J,1/16W-1608REEL		C20001036M160S	1		
	R335	nsp	R,CHIP THICK 3.9K-J,1/16W-1608REEL		C20003926M160S	1		
	R336	nsp	R,CHIP THICK 100-J,1/16W-1608REEL		C20001016M160S	1		
	R339,340	nsp	R,CHIP THICK 2.2K-J,1/16W-1608REEL		C20002226M160S	1		
	R341-343	nsp	R,CHIP THICK 0-J,1/16W-1608REEL		C20000006M160S	1		
	R345-347	nsp	R,CHIP THICK 33-J,1/16W-1608REEL		C20003306M160S	1		
	R348	nsp	R,CHIP THICK 10K-J,1/16W-1608REEL		C20001036M160S	1		
	R349	nsp	R,CHIP THICK 0-J,1/16W-1608REEL		C20000006M160S	1		
	R350,351	nsp	R,CHIP THICK 33-J,1/16W-1608REEL		C20003306M160S	1		
	R352	nsp	R,CHIP THICK 0-J,1/16W-1608REEL		C20000006M160S	1		
	R353	nsp	R,CHIP THICK 100-J,1/16W-1608REEL		C20001016M160S	1		
	R359-361	nsp	R,CHIP THICK 0-J,1/16W-1608REEL		C20000006M160S	1		
	R362,363	nsp	R,CHIP THICK 75-J,1/16W-1608REEL		C20007506M160S	1		
	R368	nsp	R,CHIP THICK 0-J,1/16W-1608REEL		C20000006M160S	1		
	R373	nsp	R,CHIP THICK 12K-F,1/16W-1608REEL		C20001234M160S	1		
	R374	nsp	R,CHIP THICK 27K-F,1/16W-1608REEL		C20002734M160S	1		
	R375	nsp	R,CHIP THICK 3K-F,1/16W-1608REEL		C20003024M161S	1		
	R376,377	nsp	R,CHIP THICK 0-J,1/16W-1608REEL		C20000006M160S	1		
	R378	nsp	R,CHIP THICK 100K-J,1/16W-1608REEL		C20001046M160S	1		
	R380	nsp	R,CHIP THICK 100K-J,1/16W-1608REEL		C20001046M160S	1		
	R381	nsp	R,CHIP THICK 0-J,1/16W-1608REEL		C20000006M160S	1		
	R382	nsp	R,CHIP THICK 100-J,1/16W-1608REEL		C20001016M160S	1		
	R383	nsp	R,CHIP THICK 0-J,1/16W-1608REEL		C20000006M160S	1		
	R384	nsp	R,CHIP THICK 10K-J,1/16W-1608REEL		C20001036M160S	1		
	R386,387	nsp	R,CHIP THICK 0-J,1/10W-2012REEL		C200000060200S	1		
	R388	nsp	R,CHIP THICK 0-J,1/16W-1608REEL		C20000006M160S	1		
	R389,390	nsp	R,CHIP THICK 10K-J,1/16W-1608REEL		C20001036M160S	1		
	R391-393	nsp	R,CHIP THICK 0-J,1/10W-2012REEL		C200000060200S	1		
	R396	nsp	R,CHIP THICK 0-J,1/8W-3216REEL		C200000061300S	1		
	R401-404	nsp	R,CHIP THICK 0-J,1/16W-1608REEL		C20000006M160S	1		
	R407	nsp	R,CHIP THICK 47K-J,1/16W-1608REEL		C20004736M160S	1		
	R409,410	nsp	R,CHIP THICK 0-J,1/16W-1608REEL		C20000006M160S	1		
	R412	nsp	R,CHIP THICK 47K-J,1/16W-1608REEL		C20004736M160S	1		
	R417	nsp	R,CHIP THICK 10K-J,1/16W-1608REEL		C20001036M160S	1		
	R418	nsp	R,CHIP THICK 1K-J,1/16W-1608REEL		C20001026M160S	1		
	R423	nsp	R,CHIP THICK 10K-J,1/16W-1608REEL		C20001036M160S	1		
	R424	nsp	R,CHIP THICK 1K-J,1/16W-1608REEL		C20001026M160S	1		
	R426	nsp	R,CHIP THICK 1K-J,1/16W-1608REEL		C20001026M160S	1		
	R428	nsp	R,CHIP THICK 10K-J,1/16W-1608REEL	E2	C20001036M160S	1		
	R428	nsp	R,CHIP THICK 6.8K-J,1/16W-1608REEL	JP	C20006826M160S	1		
	R429-432	nsp	R,CHIP THICK 10K-J,1/16W-1608REEL		C20001036M160S	1		
	R433	nsp	R,CHIP THICK 1K-J,1/16W-1608REEL		C20001026M160S	1		

	Ref. No.	Part No.	Part Name	Remarks		Q'ty	New	Ver
	R434	nsp	R,CHIP THICK 1K-J,1/16W-1608REEL	JP	C20001026M160S	1		
	R435	nsp	R,CHIP THICK 10K-J,1/16W-1608REEL		C20001036M160S	1		
	R436	nsp	R,CHIP THICK 33-J,1/16W-1608REEL		C20003306M160S	1		
	R440,441	nsp	R,CHIP THICK 10K-J,1/16W-1608REEL		C20001036M160S	1		
	R442	nsp	R,CHIP THICK 4.7K-J,1/16W-1608REEL		C20004726M160S	1		
	R443	nsp	R,CHIP THICK 10K-J,1/16W-1608REEL		C20001036M160S	1		
	R444	nsp	R,CHIP THICK 1K-J,1/16W-1608REEL		C20001026M160S	1		
	R445	nsp	R,CHIP THICK 220-J,1/16W-1608REEL		C20002216M160S	1		
	R446	nsp	R,CHIP THICK 10K-J,1/16W-1608REEL		C20001036M160S	1		
	R447	nsp	R,CHIP THICK 100K-J,1/16W-1608REEL		C20001046M160S	1		
	R448,449	nsp	R,CHIP THICK 22-J,1/16W-1608REEL		C20002206M160S	1		
	R450	nsp	R,CHIP THICK 1M-J,1/16W-1608REEL		C20001056M160S	1		
	R451,452	nsp	R,CHIP THICK 22-J,1/16W-1608REEL		C20002206M160S	1		
	R454	nsp	R,CHIP THICK 10K-J,1/16W-1608REEL		C20001036M160S	1		
	R455	nsp	R,CHIP THICK 0-J,1/16W-1608REEL		C20000006M160S	1		
	R456	nsp	R,CHIP THICK 33-J,1/16W-1608REEL		C20003306M160S	1		
	R457	nsp	R,CHIP THICK 22-J,1/16W-1608REEL		C20002206M160S	1		
	R458	nsp	R,CHIP THICK 220-J,1/16W-1608REEL		C20002216M160S	1		
	R459-462	nsp	R,CHIP THICK 22-J,1/16W-1608REEL		C20002206M160S	1		
	R463	nsp	R,CHIP THICK 10K-J,1/16W-1608REEL		C20001036M160S	1		
	R464-468	nsp	R,CHIP THICK 22-J,1/16W-1608REEL		C20002206M160S	1		
	R469,470	nsp	R,CHIP THICK 10K-J,1/16W-1608REEL		C20001036M160S	1		
	R471-473	nsp	R,CHIP THICK 22-J,1/16W-1608REEL		C20002206M160S	1		
	R474	nsp	R,CHIP THICK 10K-J,1/16W-1608REEL		C20001036M160S	1		
	R475,476	nsp	R,CHIP THICK 33-J,1/16W-1608REEL		C20003306M160S	1		
	R477	nsp	R,CHIP THICK 10K-J,1/16W-1608REEL		C20001036M160S	1		
	R479	nsp	R,CHIP THICK 4.7K-J,1/16W-1608REEL		C20004726M160S	1		
	R480	nsp	R,CHIP THICK 0-J,1/16W-1608REEL		C20000006M160S	1		
	R481	nsp	R,CHIP THICK 4.7K-J,1/16W-1608REEL		C20004726M160S	1		
	R482	nsp	R,CHIP THICK 10K-J,1/16W-1608REEL		C20001036M160S	1		
	R484	nsp	R,CHIP THICK 10K-J,1/16W-1608REEL		C20001036M160S	1		
	R485	nsp	R,CHIP THICK 1.6K-J,1/16W-1608REEL		C20001626M160S	1		
	R486	nsp	R,CHIP THICK 1K-J,1/16W-1608REEL		C20001026M160S	1		
	R488	nsp	R,CHIP THICK 10K-J,1/16W-1608REEL		C20001036M160S	1		
	R489,490	nsp	R,CHIP THICK 4.7K-J,1/16W-1608REEL		C20004726M160S	1		
	R492	nsp	R,CHIP THICK 10K-J,1/16W-1608REEL		C20001036M160S	1		
	R493-497	nsp	R,CHIP THICK 4.7K-J,1/16W-1608REEL		C20004726M160S	1		
	R499-506	nsp	R,CHIP THICK 0-J,1/16W-1608REEL		C20000006M160S	1		
	R508,509	nsp	R,CHIP THICK 100K-J,1/16W-1608REEL		C20001046M160S	1		
	R510,511	nsp	R,CHIP THICK 33-J,1/16W-1608REEL		C20003306M160S	1		
	R512,513	nsp	R,CHIP THICK 10K-J,1/16W-1608REEL		C20001036M160S	1		
	R514	nsp	R,CHIP THICK 0-J,1/16W-1608REEL		C20000006M160S	1		
	R516,517	nsp	R,CHIP THICK 33-J,1/16W-1608REEL		C20003306M160S	1		
	R520	nsp	R,CHIP THICK 10K-J,1/16W-1608REEL		C20001036M160S	1		
	R521	nsp	R,CHIP THICK 0-J,1/10W-2012REEL		C200000060200S	1		
	R522	nsp	R,CHIP THICK 100K-J,1/16W-1608REEL		C20001046M160S	1		
	R527	nsp	R,CHIP THICK 33-J,1/16W-1608REEL		C20003306M160S	1		
	R529	nsp	R,CHIP THICK 0-J,1/16W-1608REEL		C20000006M160S	1		
	R531,532	nsp	R,CHIP THICK 0-J,1/16W-1608REEL		C20000006M160S	1		
	R561,562	nsp	R,CHIP THICK 22-J,1/16W-1608REEL		C20002206M160S	1		
	R563-566	nsp	R,CHIP THICK 10K-J,1/16W-1608REEL		C20001036M160S	1		
	R701,702	nsp	R,CHIP THICK 0-J,1/16W-1608REEL		C20000006M160S	1		
	R704	nsp	R,CHIP THICK 0-J,1/16W-1608REEL		C20000006M160S	1		
	R705	nsp	R,CHIP THICK 2.2K-J,1/16W-1608REEL		C20002226M160S	1		
	R706,707	nsp	R,CHIP THICK 510K-J,1/16W-1608REEL		C20005146M160S	1		
	R708,709	nsp	R,CHIP THICK 0-J,1/16W-1608REEL		C20000006M160S	1		
	R717,718	nsp	R,CHIP THICK 0-J,1/16W-1608REEL		C20000006M160S	1		
	R731-734	nsp	R,CHIP THICK 0-J,1/16W-1608REEL		C20000006M160S	1		
	R751,752	nsp	R,CHIP THICK 16K-J,1/16W-1608REEL		C20001636M160S	1		
	R753,754	nsp	R,CHIP THICK 15K-J,1/16W-1608REEL		C20001536M160S	1		
	R755	nsp	R,CHIP THICK 16K-J,1/16W-1608REEL		C20001636M160S	1		
	R756,757	nsp	R,CHIP THICK 15K-J,1/16W-1608REEL		C20001536M160S	1		
	R758	nsp	R,CHIP THICK 16K-J,1/16W-1608REEL		C20001636M160S	1		
	R759,760	nsp	R,CHIP THICK 5.1K-J,1/16W-1608REEL		C20005126M160S	1		
	R761,762	nsp	R,CHIP THICK 39K-J,1/16W-1608REEL		C20003936M160S	1		
	R763,764	nsp	R,CHIP THICK 10K-J,1/16W-1608REEL		C20001036M160S	1		
	R781	nsp	R,CHIP THICK 47-J,1/16W-1608REEL		C20004706M160S	1		
	R782-785	nsp	R,CHIP THICK 0-J,1/16W-1608REEL		C20000006M160S	1		
	R786,787	nsp	R,CHIP THICK 220-J,1/16W-1608REEL		C20002216M160S	1		
	R790	nsp	R,CHIP THICK 0-J,1/16W-1608REEL		C20000006M160S	1		
	R792	nsp	R,CHIP THICK 0-J,1/16W-1608REEL		C20000006M160S	1		
	R901	nsp	R,CHIP THICK 0-J,1/16W-1608REEL		C20000006M160S	1		
	R904-908	nsp	R,CHIP THICK 0-J,1/16W-1608REEL		C20000006M160S	1		
	R909	nsp	R,CHIP THICK 100-J,1/16W-1608REEL		C20001016M160S	1		
	R910	nsp	R,CHIP THICK 47K-J,1/16W-1608REEL		C20004736M160S	1		
	R911-913	nsp	R,CHIP THICK 0-J,1/16W-1608REEL		C20000006M160S	1		
	R914	nsp	R,CHIP THICK 47-J,1/16W-1608REEL		C20004706M160S	1		
	R915	nsp	R,CHIP THICK 1M-J,1/16W-1608REEL		C20001056M160S	1		
	R916	nsp	R,CHIP THICK 0-J,1/16W-1608REEL		C20000006M160S	1		
	R917-920	nsp	R,CHIP THICK 39-J,1/16W-1608REEL		C20003906M160S	1		
	R921-923	nsp	R,CHIP THICK 0-J,1/16W-1608REEL		C20000006M160S	1		
	R924	nsp	R,CHIP THICK 91-J,1/16W-1608REEL		C20009106M160S	1		
	R925	nsp	R,CHIP THICK 1K-J,1/16W-1608REEL		C20001026M160S	1		
	R926	nsp	R,CHIP THICK 10K-J,1/16W-1608REEL		C20001036M160S	1		
	R927	nsp	R,CHIP THICK 220-J,1/16W-1608REEL		C20002216M160S	1		
	R928	nsp	R,CHIP THICK 33-J,1/16W-1608REEL		C20003306M160S	1		
	R929	nsp	R,CHIP THICK 330K-J,1/16W-1608REEL		C20003346M160S	1		
	R930	nsp	R,CHIP THICK 47K-J,1/16W-1608REEL		C20004736M160S	1		
	R931-933	nsp	R,CHIP THICK 100-J,1/16W-1608REEL		C20001016M160S	1		
	R934	nsp	R,CHIP THICK 15K-J,1/16W-1608REEL		C20001536M160S	1		
	R935,936	nsp	R,CHIP THICK 100-J,1/16W-1608REEL		C20001016M160S	1		
	R937	nsp	R,CHIP THICK 0-J,1/16W-1608REEL		C20000006M160S	1		
	R938-940	nsp	R,CHIP THICK 10K-J,1/16W-1608REEL		C20001036M160S	1		
	R941	nsp	R,CHIP THICK 470-J,1/16W-1608REEL		C20004716M160S	1		
	R942-949	nsp	R,CHIP THICK 10K-J,1/16W-1608REEL		C20001036M160S	1		
	R952	nsp	R,CHIP THICK 470-J,1/16W-1608REEL		C20004716M160S	1		
	R953	nsp	R,CHIP THICK 0-J,1/16W-1608REEL		C20000006M160S	1		
	R955,956	nsp	R,CHIP THICK 47K-J,1/16W-1608REEL		C20004736M160S	1		
	R957	nsp	R,CHIP THICK 4.7K-J,1/16W-1608REEL		C20004726M160S	1		
	R959	nsp	R,CHIP THICK 0-J,1/16W-1608REEL		C20000006M160S	1		
	R960	nsp	R,CHIP THICK 4.7K-J,1/16W-1608REEL		C20004726M160S	1		
	CAPACITORS GROUP							
	C102	nsp	C,CERAMIC CHIP T.C COG100PF-J/50V-1608REEL		D010101167160S	1		
	C103	nsp	C,CERAMIC CHIP HIK Y5V0.1UF-Z/50V-1608REEL		D011104597160S	1		
	C106-108	nsp	C,CERAMIC CHIP T.C COG100PF-J/50V-1608REEL		D010101167160S	1		
	C109	00D9630338606	C,ELECT CHIP(GE) 10UF-MVG/16V,3.3*3.7*5.2 REEL (Z8154) SY		D050100083470S	1		
	C111	nsp	C,CERAMIC CHIP HIK X7R0.1UF-K/50V-1608REEL		D011104577160S	1		
	C112	00D2544694909	C,ELECT GE 85C 100UF-M/25V,6.3*11 RFO-25V101M ELNA		D040101084330S	1		
	C113	nsp	C,CERAMIC CHIP HIK X7R0.1UF-K/50V-1608REEL		D011104577160S	1		
	C114	nsp	C,CERAMIC CHIP T.C COG12PF-J/50V-1608REEL		D010120167160S	1		
	C115	nsp	C,CERAMIC CHIP T.C COG15PF-J/50V-1608REEL		D010150167160S	1		

	Ref. No.	Part No.	Part Name	Remarks		Q'ty	New	Ver
	C116	nsp	C,CERAMIC CHIP HIK X7R0.1UF-K/50V-1608REEL		D011104577160S	1		
	C117	nsp	C,CERAMIC CHIP HIK X7R4700PF-K/50V-1608REEL		D011472777160S	1		
	C118	nsp	C,CERAMIC CHIP T.C X7R 0.068UF-K/50V-1608REEL		D010683777160S	1		
	C119	00D2544694909	C,ELECT GE 85C 100UF-M/25V,6.3*11 RFO-25V101M ELNA		D040101084330S	1		
	C120,121	nsp	C,CERAMIC CHIP HIK X7R0.1UF-K/50V-1608REEL		D011104577160S	1		
	C122,123	00D9630338606	C,ELECT CHIP(GE) 10UF-MVG/16V,3.3*3.7*5.2 REEL (Z8154) SY		D050100083470S	1		
	C124,125	9631345022 10S	C,ELECT CHIP(GE) 22UF-MV/6.3V,3.3*3.7*5.2 REEL (Z8154) SY		D050220081460S	1		
	C126,127	nsp	C,CERAMIC CHIP T.C COG)10PF-J/50V-1608REEL		D010100167161S	1		
	C128,129	nsp	C,CERAMIC CHIP HIK X7R0.1UF-K/50V-1608REEL		D011104577160S	1		
	C130	nsp	C,CERAMIC CHIP HIK X7R0.01UF-K/50V-1608REEL		D011103777160S	1		
	C131-133	nsp	C,CERAMIC CHIP HIK X7R0.1UF-K/50V-1608REEL		D011104577160S	1		
	C134	nsp	C,CERAMIC CHIP HIK X7R0.01UF-K/50V-1608REEL		D011103777160S	1		
	C135	00D9630333203	C,ELECT GE 85C 100UF-M/16V,5*11-5RE,SHL SY		D040101083090S	1		
	C136-140	nsp	C,CERAMIC CHIP HIK X7R0.1UF-K/50V-1608REEL		D011104577160S	1		
	C141	nsp	C,CERAMIC CHIP T.C X7R 1000PF-K/50V-1608REEL		D010102777160S	1		
	C142	00D9639006557	C,ELECT GE 85C 220UF-M/6.3V,5*11-5RE-SHL SY		D040221081060S	1		
	C143-145	nsp	C,CERAMIC CHIP HIK X7R0.1UF-K/50V-1608REEL		D011104577160S	1		
	C146	nsp	C,CERAMIC CHIP T.C COG12PF-J/50V-1608REEL		D010120167160S	1		
	C147	nsp	C,CERAMIC CHIP T.C COG15PF-J/50V-1608REEL		D010150167160S	1		
	C148-150	nsp	C,CERAMIC CHIP HIK X7R0.1UF-K/50V-1608REEL		D011104577160S	1		
	C151	00D9639006557	C,ELECT GE 85C 220UF-M/6.3V,5*11-5RE-SHL SY		D040221081060S	1		
	C152	nsp	C,CERAMIC CHIP HIK X7R0.1UF-K/50V-1608REEL		D011104577160S	1		
	C153	9631340018 60S	C,ELECT GE 85C 470UF-M/16V,8*11.5-5RE,SHL-SY		D040471083080S	1		
	C154-157	nsp	C,CERAMIC CHIP HIK X7R0.1UF-K/50V-1608REEL		D011104577160S	1		
	C158,159	9631340018 60S	C,ELECT GE 85C 470UF-M/16V,8*11.5-5RE,SHL-SY		D040471083080S	1		
	C160	9631345021 40S	C,ELECT GE 85C 3300UF-M/50V 18*35.5L BLK SY		D040332087000S	1		
	C161	nsp	C,CERAMIC CHIP HIK X7R0.1UF-K/50V-1608REEL		D011104577160S	1		
	C162	nsp	C,CERAMIC CHIP HIK Y5V)0.033UF-K/100V-2012REEL		D01133357C201S	1		
	C163,164	nsp	C,CERAMIC CHIP HIK X7R0.1UF-K/50V-1608REEL		D011104577160S	1		
	C165,166	nsp	C,CERAMIC CHIP HIK Y5V)0.033UF-K/100V-2012REEL		D01133357C201S	1		
	C167,168	nsp	C,CERAMIC CHIP HIK X7R0.1UF-K/50V-1608REEL		D011104577160S	1		
	C169	nsp	C,CERAMIC CHIP HIK Y5V)0.033UF-K/100V-2012REEL		D01133357C201S	1		
	C170	nsp	C,CERAMIC CHIP HIK X7R0.1UF-K/50V-1608REEL		D011104577160S	1		
	C171	9631345021 40S	C,ELECT GE 85C 3300UF-M/50V 18*35.5L BLK SY		D040332087000S	1		
	C172-175	nsp	C,CERAMIC CHIP HIK X7R330PF-K/50V-2012REEL		D011331177210S	1		
	C176	nsp	C,FILM POLYESTER RED-0.47UF-J/100V-5RE MPEAM474J10005 MPE TYPE(S&A)		D02047406C050S	1		
	C177,178	nsp	C,FILM POLYESTER ST-0.1UF-J/100V-5RE PEFAM104J100 PEF TYPE		D02010406C060S	1		
	C179	nsp	C,FILM POLYESTER RED-0.47UF-J/100V-5RE MPEAM474J10005 MPE TYPE(S&A)		D02047406C050S	1		
	C180,181	nsp	C,FILM POLYESTER ST-0.1UF-J/100V-5RE PEFAM104J100 PEF TYPE		D02010406C060S	1		
	C182-185	nsp	C,FILM POLYESTER ST-0.01UF-J/100V-5RE PEFAM103J100 PEF TYPE		D02010306C060S	1		
	C186-189	nsp	C,FILM POLYESTER ST-0.1UF-J/100V-5RE PEFAM104J100 PEF TYPE		D02010406C060S	1		
	C190,191	9631345016 60S	C,ELECT GE 85C 220UF-M/25V,8*11.5-5RE.SMS SY		D040221084060S	1		
	C192	nsp	C,CERAMIC CHIP HIK X7R0.1UF-K/50V-1608REEL		D011104577160S	1		
	C193	nsp	C,CERAMIC CHIP HIK X7R0.01UF-K/50V-1608REEL		D011103777160S	1		
	C194,195	nsp	C,CERAMIC CHIP T.C X7R 1000PF-K/50V-1608REEL		D010102777160S	1		
	C196	nsp	C,CERAMIC CHIP HIK X7R0.01UF-K/50V-1608REEL		D011103777160S	1		
	C197,198	nsp	C,CERAMIC CHIP HIK X7R0.1UF-K/50V-1608REEL		D011104577160S	1		
	C199	nsp	C,CERAMIC CHIP HIK X7R0.01UF-K/50V-1608REEL		D011103777160S	1		
	C200	nsp	C,CERAMIC CHIP T.C X7R 1000PF-K/50V-1608REEL		D010102777160S	1		
	C201,202	nsp	C,CERAMIC CHIP HIK X7R0.1UF-K/50V-1608REEL		D011104577160S	1		
	C203,204	00D2544541939	C,ELECT GE 85C 47UF-M/25V 5*11-5RE.SMS SY		D040470084070S	1		
	C205,206	nsp	C,CERAMIC CHIP T.C COG270PF-J/50V-1608REEL		D010271167160S	1		
	C207,208	nsp	C,CERAMIC CHIP T.C COG100PF-J/50V-1608REEL		D010101167160S	1		
	C209	00D2544573981	C,ELECT GE 85C 10UF-M/50V,5*11-5RE.SMS SY		D040100087070S	1		
	C210	nsp	C,CERAMIC CHIP T.C COG100PF-J/50V-1608REEL		D010101167160S	1		
	C211,212	nsp	C,CERAMIC CHIP T.C COG270PF-J/50V-1608REEL		D010271167160S	1		
	C213,214	nsp	C,CERAMIC CHIP T.C COG100PF-J/50V-1608REEL		D010101167160S	1		
	C215	00D2544573981	C,ELECT GE 85C 10UF-M/50V,5*11-5RE.SMS SY		D040100087070S	1		
	C216	nsp	C,CERAMIC CHIP T.C COG100PF-J/50V-1608REEL		D010101167160S	1		
	C217,218	nsp	C,CERAMIC CHIP HIK X7R0.1UF-K/50V-1608REEL		D011104577160S	1		
	C219,220	00D2544541939	C,ELECT GE 85C 47UF-M/25V 5*11-5RE.SMS SY		D040470084070S	1		
	C221,222	00D9630293602	C,ELECT GE 85C 1UF-M/50V,5*11-5RE.SMS SY (Pb Free)		D040010087150S	1		
	C223	nsp	C,CERAMIC CHIP HIK X7R4700PF-K/50V-1608REEL		D011472777160S	1		
	C224,225	nsp	C,CERAMIC CHIP HIK X7R0.01UF-K/50V-1608REEL		D011103777160S	1		
	C226	00D2544740921	C,ELECT CHIP(GE) 47UF-MVG/16V,5.3*5.9*5.3 REEL (Z8156) SY		D050470083200S	1		
	C227,228	nsp	C,CERAMIC CHIP HIK X7R0.01UF-K/50V-1608REEL		D011103777160S	1		
	C229	nsp	C,CERAMIC CHIP T.C X7R 1000PF-K/50V-1608REEL		D010102777160S	1		
	C230	00D2544694909	C,ELECT GE 85C 100UF-M/25V,6.3*11 RFO-25V101M ELNA		D040101084330S	1		
	C231	nsp	C,CERAMIC CHIP HIK X7R0.1UF-K/50V-1608REEL		D011104577160S	1		
	C232	00D2544694909	C,ELECT GE 85C 100UF-M/25V,6.3*11 RFO-25V101M ELNA		D040101084330S	1		
	C233	nsp	C,CERAMIC CHIP HIK X7R0.1UF-K/50V-1608REEL		D011104577160S	1		
	C234-236	nsp	C,CERAMIC CHIP T.C X7R 1000PF-K/50V-1608REEL		D010102777160S	1		
	C237,238	9631345016 60S	C,ELECT GE 85C 220UF-M/25V,8*11.5-5RE.SMS SY		D040221084060S	1		
	C239	nsp	C,CERAMIC CHIP HIK X7R1000PF-K/50V-2012REEL		D011102777200S	1		
	C240	nsp	C,CERAMIC CHIP HIK X7R0.1UF-K/50V-2012REEL		D011104777200S	1		
	C241	nsp	C,CERAMIC CHIP HIK X7R0.01UF-K/50V-2012REEL		D011103777200S	1		
	C242-244	nsp	C,CERAMIC CHIP HIK X7R0.1UF-K/50V-1608REEL		D011104577160S	1		
	C245	nsp	C,CERAMIC CHIP T.C COG)10PF-J/50V-1608REEL		D010100167161S	1		
	C246	nsp	C,CERAMIC CHIP HIK X7R0.1UF-K/50V-1608REEL		D011104577160S	1		
	C247-250	9631345021 90S	C,ELECT CHIP(GE) 47UF-M/50V,8.3*9.0*10 REEL MVG (Z8158) SY		D050470087250S	1		
	C251	nsp	C,CERAMIC CHIP T.C X7R 1000PF-K/50V-1608REEL		D010102777160S	1		
	C252	nsp	C,CERAMIC CHIP HIK X7R0.01UF-K/50V-1608REEL		D011103777160S	1		
	C253	nsp	C,CERAMIC CHIP HIK X7R0.1UF-K/50V-1608REEL		D011104577160S	1		
	C262-264	nsp	C,CERAMIC CHIP HIK X7R0.1UF-K/50V-1608REEL		D011104577160S	1		
	C265	00D2544574922	C,ELECT GE 85C 100UF-M/50V,8*11.5-5RE.SMS SY		D040101087060S	1		
	C266	nsp	C,CERAMIC CHIP HIK Y5V0.1UF-Z/50V-1608REEL		D011104597160S	1		
	C267	00D2544574922	C,ELECT GE 85C 100UF-M/50V,8*11.5-5RE.SMS SY		D040101087060S	1		
	C268	nsp	C,CERAMIC CHIP HIK Y5V0.1UF-Z/50V-1608REEL		D011104597160S	1		
	C269	nsp	C,CERAMIC CHIP HIK Y5V0.01UF-Z/50V-1608REEL		D011103597160S	1		
	C270,271	00D2544302974	C,ELECT GE 85C 100UF-M/10V,6.3*5-5RE SY (Pb Free) SY		D040101082130S	1		
	C272	nsp	C,CERAMIC CHIP HIK Y5V0.01UF-Z/50V-1608REEL		D011103597160S	1		
	C273	nsp	C,CERAMIC CHIP T.C X7R 1000PF-K/50V-1608REEL		D010102777160S	1		
	C274,275	nsp	C,CERAMIC CHIP HIK X7R0.1UF-K/50V-1608REEL		D011104577160S	1		
	C276	nsp	C,CERAMIC CHIP T.C X7R 1000PF-K/50V-1608REEL		D010102777160S	1		
	C277,278	nsp	C,CERAMIC CHIP HIK X7R0.01UF-K/50V-1608REEL		D011103777160S	1		
	C279-282	nsp	C,CERAMIC CHIP HIK X7R0.1UF-K/50V-1608REEL		D011104577160S	1		
	C283	00D2544738917	C,ELECT CHIP(GE) 220UF-M/16V 6.3*7.7 REEL (Z8157) SY		D050221083200S	1		
	C284	nsp	C,CERAMIC CHIP HIK Y5V0.01UF-Z/50V-1608REEL		D011103597160S	1		
	C285	00D2544738917	C,ELECT CHIP(GE) 220UF-M/16V 6.3*7.7 REEL (Z8157) SY		D050221083200S	1		
	C286	nsp	C,CERAMIC CHIP HIK Y5V0.01UF-Z/50V-1608REEL		D011103597160S	1		
	C287-290	nsp	C,CERAMIC CHIP HIK X7R0.1UF-K/50V-1608REEL		D011104577160S	1		
	C291	nsp	C,CERAMIC CHIP HIK X7R0.01UF-K/50V-1608REEL		D011103777160S	1		
	C301	nsp	C,CERAMIC CHIP HIK X7R0.01UF-K/50V-1608REEL		D011103777160S	1		
	C302	nsp	C,CERAMIC CHIP HIK X7R1000PF-K/50V-1608REEL		D011102777160S	1		
	C303	nsp	C,CERAMIC CHIP HIK X7R)1UF-K/10V-1608REEL		D011105772161S	1		
	C304	nsp	C,CERAMIC CHIP HIK X7R0.1UF-K/50V-1608REEL		D011104577160S	1		
	C305	nsp	C,CERAMIC CHIP HIK X7R)1UF-K/10V-1608REEL		D011105772161S	1		
	C306	nsp	C,CERAMIC CHIP HIK X7R0.01UF-K/50V-1608REEL		D011103777160S	1		
	C307	nsp	C,CERAMIC CHIP HIK X7R1000PF-K/50V-1608REEL		D011102777160S	1		
	C308	nsp	C,CERAMIC CHIP HIK X7R)1UF-K/10V-1608REEL		D011105772161S	1		
	C309	nsp	C,CERAMIC CHIP HIK X7R0.1UF-K/50V-1608REEL		D011104577160S	1		

	Ref. No.	Part No.	Part Name	Remarks		Q'ty	New	Ver
	C310	nsp	C,CERAMIC CHIP HIK X7R)1UF-K/10V-1608REEL		D011105772161S	1		
	C311	nsp	C,CERAMIC CHIP HIK X5R)10UF-M/6.3V-1608REEL JMK107BJ106KA-T		D011106581160S	1		
	C312	nsp	C,CERAMIC CHIP HIK X7R0.01UF-K/50V-1608REEL		D011103777160S	1		
	C313	nsp	C,CERAMIC CHIP HIK X5R)10UF-M/6.3V-1608REEL JMK107BJ106KA-T		D011106581160S	1		
	C314	nsp	C,CERAMIC CHIP HIK X7R0.01UF-K/50V-1608REEL		D011103777160S	1		
	C318	nsp	C,CERAMIC CHIP HIK X7R5600PF-K/50V-1608REEL		D011562777160S	1		
	C319	nsp	C,CERAMIC CHIP HIK X7R0.1UF-K/50V-1608REEL		D011104577160S	1		
	C320-323	nsp	C,CERAMIC CHIP HIK X5R)10UF-M/6.3V-1608REEL JMK107BJ106KA-T		D011106581160S	1		
	C324	nsp	C,CERAMIC CHIP HIK X7R0.01UF-K/50V-1608REEL		D011103777160S	1		
	C326	nsp	C,CERAMIC CHIP HIK X7R4700PF-K/50V-1608REEL		D011472777160S	1		
	C327	nsp	C,CERAMIC CHIP HIK X7R0.1UF-K/50V-1608REEL		D011104577160S	1		
	C328-331	nsp	C,CERAMIC CHIP HIK X5R)10UF-M/6.3V-1608REEL JMK107BJ106KA-T		D011106581160S	1		
	C332	nsp	C,CERAMIC CHIP HIK X7R0.01UF-K/50V-1608REEL		D011103777160S	1		
	C334	nsp	C,CERAMIC CHIP HIK X7R3300PF-K/50V-1608REEL		D011332777160S	1		
	C335	nsp	C,CERAMIC CHIP HIK X7R0.1UF-K/50V-1608REEL		D011104577160S	1		
	C336-339	nsp	C,CERAMIC CHIP HIK X5R)10UF-M/6.3V-1608REEL JMK107BJ106KA-T		D011106581160S	1		
	C340	nsp	C,CERAMIC CHIP HIK X7R0.01UF-K/50V-1608REEL		D011103777160S	1		
	C342	nsp	C,CERAMIC CHIP HIK X7R)4.7UF-K/6.3V-1608REEL		D011475571160S	1		
	C343	nsp	C,CERAMIC CHIP HIK X7R0.1UF-K/50V-1608REEL		D011104577160S	1		
	C345	00D9630333203	C,ELECT GE 85C 100UF-M/16V,5*11-5RE,SHL SY		D040101083090S	1		
	C347	nsp	C,CERAMIC CHIP HIK X7R0.01UF-K/50V-1608REEL		D011103777160S	1		
	C349	nsp	C,CERAMIC CHIP HIK X7R0.1UF-K/50V-1608REEL		D011104577160S	1		
	C350	nsp	C,CERAMIC CHIP HIK X7R0.01UF-K/50V-1608REEL		D011103777160S	1		
	C351	00D9630333203	C,ELECT GE 85C 100UF-M/16V,5*11-5RE,SHL SY		D040101083090S	1		
	C352	nsp	C,CERAMIC CHIP HIK X7R0.1UF-K/50V-1608REEL		D011104577160S	1		
	C353	nsp	C,CERAMIC CHIP HIK X7R0.01UF-K/50V-1608REEL		D011103777160S	1		
	C354	nsp	C,CERAMIC CHIP HIK X7R1000PF-K/50V-1608REEL		D011102777160S	1		
	C355	nsp	C,CERAMIC CHIP HIK X7R0.1UF-K/50V-1608REEL		D011104577160S	1		
	C357	nsp	C,CERAMIC CHIP HIK X7R1000PF-K/50V-1608REEL		D011102777160S	1		
	C358,359	nsp	C,CERAMIC CHIP HIK X7R)4.7UF-K/6.3V-1608REEL		D011475571160S	1		
	C361	nsp	C,CERAMIC CHIP HIK X7R1000PF-K/50V-1608REEL		D011102777160S	1		
	C362	nsp	C,CERAMIC CHIP HIK X7R0.1UF-K/50V-1608REEL		D011104577160S	1		
	C363	00D2544538913	C,ELECT GE 85C 22UF-M/16V,5*11-5RE.SMS SY		D040220083070S	1		
	C364	nsp	C,CERAMIC CHIP HIK X7R0.1UF-K/50V-1608REEL		D011104577160S	1		
	C369	nsp	C,CERAMIC CHIP HIK X7R1000PF-K/50V-1608REEL		D011102777160S	1		
	C370	nsp	C,CERAMIC CHIP HIK Y5V0.1UF-Z/50V-1608REEL		D011104597160S	1		
	C371	nsp	C,CERAMIC CHIP HIK X7R1000PF-K/50V-1608REEL		D011102777160S	1		
	C372	nsp	C,CERAMIC CHIP HIK Y5V0.1UF-Z/50V-1608REEL		D011104597160S	1		
	C374,375	00D9639006557	C,ELECT GE 85C 220UF-M/6.3V,5*11-5RE-SHL SY		D040221081060S	1		
	C376-379	nsp	C,CERAMIC CHIP HIK X7R0.1UF-K/50V-1608REEL		D011104577160S	1		
	C388-391	nsp	C,CERAMIC CHIP T.C COG100PF-J/50V-1608REEL		D010101167160S	1		
	C401	nsp	C,CERAMIC CHIP HIK X7R0.1UF-K/50V-1608REEL		D011104577160S	1		
	C402	nsp	C,CERAMIC CHIP HIK X7R0.01UF-K/50V-1608REEL		D011103777160S	1		
	C403	nsp	C,CERAMIC CHIP T.C X7R 1000PF-K/50V-1608REEL		D010102777160S	1		
	C404	nsp	C,CERAMIC CHIP HIK X7R0.1UF-K/50V-1608REEL		D011104577160S	1		
	C405	nsp	C,CERAMIC CHIP HIK X7R0.01UF-K/50V-1608REEL		D011103777160S	1		
	C406	nsp	C,CERAMIC CHIP T.C X7R 1000PF-K/50V-1608REEL		D010102777160S	1		
	C407	nsp	C,CERAMIC CHIP HIK X7R0.1UF-K/50V-1608REEL		D011104577160S	1		
	C408	nsp	C,CERAMIC CHIP HIK X7R0.01UF-K/50V-1608REEL		D011103777160S	1		
	C409	nsp	C,CERAMIC CHIP T.C X7R 1000PF-K/50V-1608REEL		D010102777160S	1		
	C410	nsp	C,CERAMIC CHIP HIK X7R0.1UF-K/50V-1608REEL		D011104577160S	1		
	C411	nsp	C,CERAMIC CHIP HIK X7R0.01UF-K/50V-1608REEL		D011103777160S	1		
	C412	nsp	C,CERAMIC CHIP T.C X7R 1000PF-K/50V-1608REEL		D010102777160S	1		
	C413	nsp	C,CERAMIC CHIP HIK X7R0.1UF-K/50V-1608REEL		D011104577160S	1		
	C414	nsp	C,CERAMIC CHIP HIK X7R0.01UF-K/50V-1608REEL		D011103777160S	1		
	C415	nsp	C,CERAMIC CHIP T.C X7R 1000PF-K/50V-1608REEL		D010102777160S	1		
	C417	00D9609009940	C,ELECT GE 85C 1000UF-M/16V,10*16-L.BLK SY		D040102083030S	1		
	C418,419	nsp	C,CERAMIC CHIP HIK Y5V0.1UF-Z/50V-1608REEL		D011104597160S	1		
	C420	963134001860S	C,ELECT GE 85C 470UF-M/16V,8*11.5-5RE,SHL-SY		D040471083080S	1		
	C421	00D9609009940	C,ELECT GE 85C 1000UF-M/16V,10*16-L.BLK SY		D040102083030S	1		
	C422	nsp	C,CERAMIC CHIP HIK Y5V0.1UF-Z/50V-1608REEL		D011104597160S	1		
	C423	nsp	C,CERAMIC CHIP T.C COG100PF-J/50V-1608REEL		D010101167160S	1		
	C424	00D2544541939	C,ELECT GE 85C 47UF-M/25V 5*11-5RE.SMS SY		D040470084070S	1		
	C425	nsp	C,CERAMIC CHIP HIK X7R1000PF-K/50V-1608REEL		D011102777160S	1		
	C426	nsp	C,CERAMIC CHIP HIK Y5V0.1UF-Z/50V-1608REEL		D011104597160S	1		
	C428-431	nsp	C,CERAMIC CHIP T.C X7R 1000PF-K/50V-1608REEL		D010102777160S	1		
	C432	nsp	C,CERAMIC CHIP HIK X7R0.01UF-K/50V-1608REEL		D011103777160S	1		
	C433	nsp	C,CERAMIC CHIP T.C X7R 1000PF-K/50V-1608REEL		D010102777160S	1		
	C434	00D2544573981	C,ELECT GE 85C 10UF-M/50V,5*11-5RE.SMS SY		D040100087070S	1		
	C435	nsp	C,CERAMIC CHIP HIK X7R0.01UF-K/50V-1608REEL		D011103777160S	1		
	C436,437	nsp	C,CERAMIC CHIP HIK X7R0.1UF-K/50V-1608REEL		D011104577160S	1		
	C438	00D2544573981	C,ELECT GE 85C 10UF-M/50V,5*11-5RE.SMS SY		D040100087070S	1		
	C439	nsp	C,CERAMIC CHIP HIK X7R0.1UF-K/50V-1608REEL		D011104577160S	1		
	C440	nsp	C,CERAMIC CHIP T.C X7R 1000PF-K/50V-1608REEL		D010102777160S	1		
	C441	nsp	C,CERAMIC CHIP HIK X7R0.01UF-K/50V-1608REEL		D011103777160S	1		
	C442	nsp	C,CERAMIC CHIP T.C X7R 1000PF-K/50V-1608REEL		D010102777160S	1		
	C444	nsp	C,CERAMIC CHIP T.C X7R 1000PF-K/50V-1608REEL		D010102777160S	1		
	C445	nsp	C,CERAMIC CHIP HIK X7R0.01UF-K/50V-1608REEL		D011103777160S	1		
	C447	nsp	C,CERAMIC CHIP T.C X7R 1000PF-K/50V-1608REEL		D010102777160S	1		
	C448,449	nsp	C,CERAMIC CHIP HIK X7R0.01UF-K/50V-1608REEL		D011103777160S	1		
	C450,451	nsp	C,CERAMIC CHIP T.C X7R 1000PF-K/50V-1608REEL		D010102777160S	1		
	C452	nsp	C,CERAMIC CHIP HIK X7R0.01UF-K/50V-1608REEL		D011103777160S	1		
	C453	nsp	C,CERAMIC CHIP T.C X7R 1000PF-K/50V-1608REEL		D010102777160S	1		
	C454	nsp	C,CERAMIC CHIP HIK X7R0.1UF-K/50V-1608REEL		D011104577160S	1		
	C456	nsp	C,CERAMIC CHIP T.C X7R 1000PF-K/50V-1608REEL		D010102777160S	1		
	C457	nsp	C,CERAMIC CHIP HIK X7R0.01UF-K/50V-1608REEL		D011103777160S	1		
	C458	nsp	C,CERAMIC CHIP HIK X7R0.1UF-K/50V-1608REEL		D011104577160S	1		
	C459	nsp	C,CERAMIC CHIP T.C X7R 1000PF-K/50V-1608REEL		D010102777160S	1		
	C460	nsp	C,CERAMIC CHIP HIK X7R0.01UF-K/50V-1608REEL		D011103777160S	1		
	C461	nsp	C,CERAMIC CHIP HIK X7R0.1UF-K/50V-1608REEL		D011104577160S	1		
	C462	nsp	C,CERAMIC CHIP T.C X7R 1000PF-K/50V-1608REEL		D010102777160S	1		
	C463	nsp	C,CERAMIC CHIP HIK X7R0.01UF-K/50V-1608REEL		D011103777160S	1		
	C464	nsp	C,CERAMIC CHIP HIK X7R0.1UF-K/50V-1608REEL		D011104577160S	1		
	C465	00D9639006544	C,ELECT GE 85C 22UF-M/25V,5*11-5RE SMS SY		D040220084050S	1		
	C466	nsp	C,CERAMIC CHIP HIK X7R0.1UF-K/50V-1608REEL		D011104577160S	1		
	C467	nsp	C,CERAMIC CHIP HIK X7R0.01UF-K/50V-1608REEL		D011103777160S	1		
	C468	00D9630293602	C,ELECT GE 85C 1UF-M/50V,5*11-5RE.SMS SY (Pb Free)		D040010087150S	1		
	C469	nsp	C,CERAMIC CHIP T.C X7R 1000PF-K/50V-1608REEL		D010102777160S	1		
	C470	nsp	C,CERAMIC CHIP HIK X7R0.01UF-K/50V-1608REEL		D011103777160S	1		
	C471	nsp	C,CERAMIC CHIP HIK X7R0.1UF-K/50V-1608REEL		D011104577160S	1		
	C473	nsp	C,CERAMIC CHIP HIK X7R0.01UF-K/50V-1608REEL		D011103777160S	1		
	C474,475	nsp	C,CERAMIC CHIP HIK X7R0.1UF-K/50V-1608REEL		D011104577160S	1		
	C546	nsp	C,CERAMIC CHIP T.C X7R 1000PF-K/50V-1608REEL		D010102777160S	1		
	C551	nsp	C,CERAMIC CHIP T.C COG100PF-J/50V-1608REEL		D010101167160S	1		
	C702	nsp	C,CERAMIC CHIP HIK Y5V0.1UF-Z/50V-1608REEL		D011104597160S	1		
	C703,704	nsp	C,CERAMIC CHIP HIK X7R1000PF-K/50V-1608REEL		D011102777160S	1		
	C705	nsp	C,CERAMIC CHIP HIK Y5V0.1UF-Z/50V-1608REEL		D011104597160S	1		
	C706	nsp	C,CERAMIC CHIP HIK Y5V1UF-Z/50V-1608REEL		D011105597160S	1		
	C707	nsp	C,CERAMIC CHIP HIK X7R0.01UF-K/50V-1608REEL		D011103777160S	1		
	C711,712	nsp	C,CERAMIC CHIP HIK X7R0.01UF-K/50V-1608REEL		D011103777160S	1		
	C713-715	nsp	C,CERAMIC CHIP HIK Y5V0.1UF-Z/50V-1608REEL		D011104597160S	1		

	Ref. No.	Part No.	Part Name	Remarks		Q'ty	New	Ver
	C716	nsp	C,CERAMIC CHIP HIK X7R1000PF-K/50V-1608REEL		D011102777160S	1		
	C751-758	nsp	C,CERAMIC CHIP T.C COG100PF-J/50V-1608REEL		D010101167160S	1		
	C760	nsp	C,CERAMIC CHIP HIK X7R0.1UF-K/50V-1608REEL		D011104577160S	1		
	C761-763	00D9630338606	C,ELECT CHIP(GE) 10UF-MVG/16V,3.3*3.7*5.2 REEL (Z8154) SY		D050100083470S	1		
	C764,765	00D2544573981	C,ELECT GE 85C 10UF-M/50V,5*11-5RE.SMS SY		D040100087070S	1		
	C766-768	00D9630338606	C,ELECT CHIP(GE) 10UF-MVG/16V,3.3*3.7*5.2 REEL (Z8154) SY		D050100083470S	1		
	C769	nsp	C,CERAMIC CHIP HIK X7R0.1UF-K/50V-1608REEL		D011104577160S	1		
	C770	00D9630333203	C,ELECT GE 85C 100UF-M/16V,5*11-5RE,SHL SY		D040101083090S	1		
	C771	00D9630338606	C,ELECT CHIP(GE) 10UF-MVG/16V,3.3*3.7*5.2 REEL (Z8154) SY		D050100083470S	1		
	C772,773	nsp	C,CERAMIC CHIP HIK X7R)1UF-K/16V-1608REEL		D011105173161S	1		
	C780	nsp	C,CERAMIC CHIP HIK X7R0.1UF-K/50V-1608REEL		D011104577160S	1		
	C781	963134000450S	C,ELECT CHIP(GE) 100UF-MVG/16V,6.6*7.2*5.7 REEL (Z8157) SY		D050101083660S	1		
	C782	nsp	C,CERAMIC CHIP HIK X7R0.1UF-K/50V-1608REEL		D011104577160S	1		
	C901	963134000450S	C,ELECT CHIP(GE) 100UF-MVG/16V,6.6*7.2*5.7 REEL (Z8157) SY		D050101083660S	1		
	C902	nsp	C,CERAMIC CHIP HIK X7R0.1UF-K/50V-1608REEL		D011104577160S	1		
	C903	nsp	C,CERAMIC CHIP T.C X7R 1000PF-K/50V-1608REEL		D010102777160S	1		
	C904	nsp	C,CERAMIC CHIP HIK X7R0.1UF-K/50V-1608REEL		D011104577160S	1		
	C905	nsp	C,CERAMIC CHIP HIK X7R0.01UF-K/50V-1608REEL		D011103777160S	1		
	C906,907	nsp	C,CERAMIC CHIP T.C COG470PF-J/50V-1608REEL		D010471167160S	1		
	C908	nsp	C,CERAMIC CHIP HIK X7R0.1UF-K/50V-1608REEL		D011104577160S	1		
	C909,910	nsp	C,CERAMIC CHIP HIK X7R0.047UF-K/16V-1608REEL		D011473773160S	1		
	C911	963134000450S	C,ELECT CHIP(GE) 100UF-MVG/16V,6.6*7.2*5.7 REEL (Z8157) SY		D050101083660S	1		
	C912,913	00D2544302974	C,ELECT GE 85C 100UF-M/10V,6.3*5-5RE SY (Pb Free) SY		D040101082130S	1		
	C915	nsp	C,CERAMIC CHIP HIK X7R0.1UF-K/50V-1608REEL		D011104577160S	1		
	C916	nsp	C,CERAMIC CHIP T.C X7R 1000PF-K/50V-1608REEL		D010102777160S	1		
	C917	nsp	C,CERAMIC CHIP HIK X7R0.01UF-K/50V-1608REEL		D011103777160S	1		
	C918,919	nsp	C,CERAMIC CHIP HIK X7R0.1UF-K/50V-1608REEL		D011104577160S	1		
	C920	00D2544302974	C,ELECT GE 85C 100UF-M/10V,6.3*5-5RE SY (Pb Free) SY		D040101082130S	1		
	C921	nsp	C,CERAMIC CHIP HIK X7R5600PF-K/50V-1608REEL		D011562777160S	1		
	C922	963134000450S	C,ELECT CHIP(GE) 100UF-MVG/16V,6.6*7.2*5.7 REEL (Z8157) SY		D050101083660S	1		
	C923	nsp	C,CERAMIC CHIP HIK X7R0.1UF-K/50V-1608REEL		D011104577160S	1		
	C924,925	00D2544302974	C,ELECT GE 85C 100UF-M/10V,6.3*5-5RE SY (Pb Free) SY		D040101082130S	1		
	C926,927	nsp	C,CERAMIC CHIP T.C COG15PF-J/50V-1608REEL		D010150167160S	1		
	C928-931	nsp	C,CERAMIC CHIP HIK X7R0.1UF-K/50V-1608REEL		D011104577160S	1		
	C932,933	00D2544302974	C,ELECT GE 85C 100UF-M/10V,6.3*5-5RE SY (Pb Free) SY		D040101082130S	1		
	C934	nsp	C,CERAMIC CHIP HIK X7R 0.033UF-K/25V-1608REEL		D011333774161S	1		
	C935,936	nsp	C,CERAMIC CHIP HIK X7R0.1UF-K/50V-1608REEL		D011104577160S	1		
	C937	963134000450S	C,ELECT CHIP(GE) 100UF-MVG/16V,6.6*7.2*5.7 REEL (Z8157) SY		D050101083660S	1		
	C938	nsp	C,CERAMIC CHIP HIK X7R0.1UF-K/50V-1608REEL		D011104577160S	1		
	C939	nsp	C,CERAMIC CHIP T.C X7R 1000PF-K/50V-1608REEL		D010102777160S	1		
	C940,941	nsp	C,CERAMIC CHIP HIK X7R0.1UF-K/50V-1608REEL		D011104577160S	1		
	C942	00D2544302974	C,ELECT GE 85C 100UF-M/10V,6.3*5-5RE SY (Pb Free) SY		D040101082130S	1		
	C943,944	nsp	C,CERAMIC CHIP HIK X7R0.1UF-K/50V-1608REEL		D011104577160S	1		
	C945	963134000450S	C,ELECT CHIP(GE) 100UF-MVG/16V,6.6*7.2*5.7 REEL (Z8157) SY		D050101083660S	1		
	C946	nsp	C,CERAMIC CHIP HIK X7R0.1UF-K/50V-1608REEL		D011104577160S	1		
	C947	nsp	C,CERAMIC CHIP T.C X7R 1000PF-K/50V-1608REEL		D010102777160S	1		
	C948	nsp	C,CERAMIC CHIP HIK X7R0.01UF-K/50V-1608REEL		D011103777160S	1		
	C951	nsp	C,CERAMIC CHIP HIK X7R0.1UF-K/50V-1608REEL		D011104577160S	1		
	C952	nsp	C,CERAMIC CHIP HIK X7R0.015UF-K/50V-1608REEL		D011153777160S	1		
	C953	nsp	C,CERAMIC CHIP HIK X7R0.1UF-K/50V-1608REEL		D011104577160S	1		
	C954	nsp	C,CERAMIC CHIP HIK X7R4700PF-K/50V-1608REEL		D011472777160S	1		
	C955,956	963134502200S	C,ELECT CHIP(GE) 470UF-M/16V,10*10 MV 16VC470 SY		D050471083471S	1		
	C957	nsp	C,CERAMIC CHIP HIK X7R0.01UF-K/50V-1608REEL		D011103777160S	1		
	C959	00D2544302974	C,ELECT GE 85C 100UF-M/10V,6.3*5-5RE SY (Pb Free) SY		D040101082130S	1		
	C960	nsp	C,CERAMIC CHIP HIK X7R2200PF-K/50V-1608REEL		D011222777160S	1		
	C962,963	nsp	C,CERAMIC CHIP HIK X7R0.1UF-K/50V-1608REEL		D011104577160S	1		
	C965	nsp	C,CERAMIC CHIP HIK X7R0.015UF-K/50V-1608REEL		D011153777160S	1		
	C966	nsp	C,CERAMIC CHIP HIK X7R0.1UF-K/50V-1608REEL		D011104577160S	1		
	C967	nsp	C,CERAMIC CHIP HIK X7R0.01UF-K/50V-1608REEL		D011103777160S	1		
	C968-970	nsp	C,CERAMIC CHIP HIK X7R0.1UF-K/50V-1608REEL		D011104577160S	1		
	C971	nsp	C,CERAMIC CHIP T.C COG47PF-J/50V-1608REEL		D010470167160S	1		
	C973	nsp	C,CERAMIC CHIP T.C X7R 1000PF-K/50V-1608REEL		D010102777160S	1		
	C975,976	nsp	C,CERAMIC CHIP HIK X7R0.1UF-K/50V-1608REEL		D011104577160S	1		
	C978	nsp	C,CERAMIC CHIP HIK X7R0.1UF-K/50V-1608REEL		D011104577160S	1		
	C980	00D2544302974	C,ELECT GE 85C 100UF-M/10V,6.3*5-5RE SY (Pb Free) SY		D040101082130S	1		
	C981	nsp	C,CERAMIC CHIP HIK X7R0.1UF-K/50V-1608REEL		D011104577160S	1		
	C985-989	nsp	C,CERAMIC CHIP HIK X7R0.1UF-K/50V-1608REEL		D011104577160S	1		
	C990	nsp	C,CERAMIC CHIP T.C X7R 1000PF-K/50V-1608REEL		D010102777160S	1		
	C991	nsp	C,CERAMIC CHIP HIK X7R0.01UF-K/50V-1608REEL		D011103777160S	1		
	C994	963134502200S	C,ELECT CHIP(GE) 470UF-M/16V,10*10 MV 16VC470 SY		D050471083471S	1		
	C995	nsp	C,CERAMIC CHIP HIK X7R0.1UF-K/50V-1608REEL		D011104577160S	1		
	C996	nsp	C,CERAMIC CHIP HIK X7R)1UF-K/16V-1608REEL		D011105173161S	1		
	OTHERS PARTS GROUP							
	CN101	nsp	CN,WIRE 260MM/6P 5264-06=CKM2509HV-06 WH1007#22		L000261060080S	1		
	CN303	nsp	CN,WIRE 2MM 200MM/7P 20010HS-07=CKM2002HR-07 RD2725#28 TUBE		L002201070080S	1		
	CN401	nsp	CN.FPC 1.0MM 1.0-11-29P ST DIP		L130100112910S	1		
	CN408	nsp	CN,WIRE 2MM 130MM/15P 20010HS-15=CKM2002HV-15 BK1007#24		L002131150180S	1		
	CN902	nsp	CN,WIRE 2MM 100MM/6P 20010HS-06=CKM2002HV-06 WH20080#28		L002101060200S	1		
	CN903	nsp	CN,WIRE 2MM 120MM/5P 20010HS-05=CKM2002HV-05 RD1007#26		L002121050190S	1		
	CP104	nsp	CN.WAFER 2.0MM 20010WS-07A00 DIP7P STRAIGHT		L101200100710S	1		
	CP201	nsp	CN.WAFER C125Z1-29 29P BtoB HEADER(MALE) P=1.25MM		L109012512920S	1		
	CP301	nsp	CN.WAFER 2.0MM 20010WS-06A00 DIP6P STRAIGHT		L101200100610S	1		
	CP302	nsp	CN.WAFER C125Z2-29 29P BtoB SOCKET(FEMALE) P=1.25MM		L109012522920S	1		
	CP303	nsp	CN.WAFER 2.0MM 20010WS-07A00 DIP7P STRAIGHT		L101200100710S	1		
	CP304	nsp	CN.FPC 1.0MM 1.0-16-7PB-2 7P ST SMT (JSY)		L130100160730S	1		
	CP403	nsp	CN.FPC 1.0MM 1.0-9-4P ST JSY		L130100090410S	1		
	CP404	nsp	CN.FPC 1.0MM 1.0-11-7P ST DIP		L130100110710S	1		
	CP701	963644101590S	PIN,TER.MALE MFI514S0117 SMD IPOD DOCK (DENON SAGUB)		L15015630A310S	1		
	CP901	nsp	CN.FPC 1.0MM 10022HS-16C 16P VERTICAL SMT NON ZIF TYPE		L130100220160S	1		
	GPT101	nsp	TERMINAL MET37-0002/TAPIG EARTH FITTING		3790040886000S	1		
	GPT103-105	nsp	TERMINAL MET37-0002/TAPIG EARTH FITTING		3790040886000S	1		
	J101,102	nsp	CN,WIRE 1P JUMPER (0.6/52MM)		L045084006040S	1		
	JACK101	00D9630237503	MODULE JSR1165/OPTICAL RECEIVER 96K SHUTTER		E100116500040S	1		
	JACK102	00D9630132103	TER,RCA 4PIN RCA-405B-04(WH,WH,RD,RD)-YUQIU		G602405B0400YS	1		
	JACK104	00D9630146005	TER,RCA 1PIN RCA-107A(BK)		G600107A0000YS	1		
	JACK105	963646100500S	TER,BOARD SCREW 4P JB-405EWG-02(2RD/BK) 투명		G612405EWG02YS	1		
	JACK301	963643100130S	JACK,MODULAR RJ45 1*1W/TRANSFORMER W/O LED 99TA-03188400023101		G4060RJ450120S	1		
	L104-107	963115100320S	COIL,BEAD CBW201209U221T 220ohm SMD2012 TYPE		D340201202210S	1		
	L108,109	nsp	COIL,INDUCTOR POWER INDUCTOR 7W14L-100M-RE(10UH*2) SAGAMI		D310701401010S	1		
	L110	nsp	COIL,BEAD HB-1T2012-102JT SMD2012 TYPE		D340201200090S	1		
	L302-304	963115100320S	COIL,BEAD CBW201209U221T 220ohm SMD2012 TYPE		D340201202210S	1		
	L305-307	nsp	COIL,INDUCTOR NR8040T 4R7N 8*8 SMD		D310804064720S	1		
	L308,309	nsp	R,CHIP THICK 0-J,1/10W-2012REEL		C200000060200S	1		
	L311	nsp	R,CHIP THICK 0-J,1/16W-1608REEL		C20000006M160S	1		
	L312-314	nsp	COIL,BEAD BLM18BD102SN1D 1000ohm 100mA SMD1608 REEL		D340160831020S	1		
	L701	963115100320S	COIL,BEAD CBW201209U221T 220ohm SMD2012 TYPE		D340201202210S	1		
	L781-783	963115100320S	COIL,BEAD CBW201209U221T 220ohm SMD2012 TYPE		D340201202210S	1		
	L785-788	nsp	COIL,BEAD HB-1T1608-102JT 1000ohm SMD1608 TYPE		D340160821020S	1		
	L901-906	nsp	COIL,BEAD CBW160808U121T 120ohm SMD1608 TYPE		D340160811210S	1		
	L907	nsp	COIL,FILTER-INDUCTOR 10UH-Q40/24M-R2.5-52RE 02TB		D330100700520S	1		
	RES401	00D9630217701	RESONATOR,CERAMIC ZTT12.00MT-TF C1,C2=22PF 3PIN 2.5-REEL		E830120000060S	1		

	Ref. No.	Part No.	Part Name	Remarks		Q'ty	New	Ver
	SW401	963662100130S	SW,TACT THHH583RAA VERTICAL TACT SWITCH 260G		G180583000010S	1		
	U100	nsp	CN.WAFER 2.5MM FEMALE HEADER 2.54MM 64P(2*32) CSHA201-3202 DUAL		L102201640200S	1		
	X901	963141100070S	CRYSTAL 16.934MHZ HC-49/SMD CL=12PF		E80016R934030S	1		
	XTAL101	963141100770S	CRYSTAL CHIP 24.576MHz CL=10PF FA-238/SMD3225 EPSON		E80524R576050S	1		
	XTAL102	963141100770S	CRYSTAL CHIP 13.5MHz CL=10PF FA-238V/SMD3225 EPSON		E80513R500050S	1		
	BKT101	nsp	BRACKET AVR133(HARMAN) BURRING HOLE SPTE 0.8t/SCREW		4010210196100S	1		
	BKT301,302	nsp	BRACKET AVR133(HARMAN) BURRING HOLE SPTE 0.8t/SCREW		4010210196100S	1		
	★	963189100410D	CX870-3B-D60 JUKEBOX NETWORK 2ANT 64MSDRAM NEW F/W (E2) RCDN8		8.9528E+12	1	*	
	★	963189100420D	CX870-3B-D60 JUKEBOX NETWORK 2ANT 64MSDRAM NEW F/W (JP) RCDN8		8.9528E+12	1	*	
	★	963189100500S	CX870-3B-D60 JUKEBOX NETWORK 2ANT 64MSDRAM NEW F/W (E1C) RCDN8		8.9525E+12	1	*	Ver.3
	★	nsp	HEAT SINK DRAF109SP AL6063 77*16*(H)49(ANAM:CMY1A368)/MAIN		2120212118000S	1		
	★	nsp	PLATE DRAF109SP(DENON) SPTE t0.3 A4/TERMINAL		4470212666000S	1		
	★	nsp	SCREW,TAP TITE +2S 3*8 B-TYPE ZNW/BH		B020030081B10S	3		
	★	943183100210S	TUNER,FM KST-MW104FV1-S63V 4GANG+FM ONLY+50US+RDS	E2	E900104011630S	1		
	★	963183100300S	TUNER,FM/AM KST-MW004MV1-S63	JP	E903004100020S	1		

PARTS LIST OF EXPLODED VIEW

Note The symbols in the column "Remarks" indicate the following destinations.
E2 : Europe model E3 : US & Canada model JP : Japan model E1C : China model
BLACK : Black model WHITE : White model

	Ref. No.	Part No.	Part Name	Remarks		Q'ty	New	Ver
	★	9U6391009500D	P.C.B TOTAL ASSY RCDN8**E2(DENON)/MAIN	E2	7025MU1201020	-	*	Ver.3
	★	9U6391009600D	P.C.B TOTAL ASSY RCDN8**JP(DENON)/MAIN	JP	7025MU1201040	-	*	Ver.3
	★	9U6391009700D	P.C.B TOTAL ASSY RCDN8**E1C(DENON)/MAIN	E1C	7025MU1201060	-	*	Ver.3
	P2	-	MAIN PCB ASSY		-	1	*	Ver.3
	P4	-	IPOD PCB ASSY		-	1	*	Ver.3
	P5	-	NW PCB ASSY		-	1	*	Ver.3
	★	nsp	RCDN8 / FRONT		7025MU1201021	-		Ver.3
	P1	-	FRONT PCB ASSY		-	1	*	Ver.3
	P3	-	CNT(L) PCB ASSY		-	1	*	Ver.3
	P6	-	SUP PCB ASSY		-	1	*	Ver.3
!	P7	963189100390D	POWER TRANS ASSY(SMPS)	E2, E1C	8208000990020S	1	*	Ver.3
!	P7	963189100400D	POWER TRANS ASSY(SMPS)	JP	8208000990010S	1	*	
	1	963416100840S	WINDOW, DISPLAY		5077213413000S	1	*	
	2	963402103000S	PANEL FRONT	WHITE	3067215731100S	1	*	Ver.3
	2	963402103010S	PANEL FRONT	BLACK	3067215731000S	1	*	Ver.3
	3	nsp	TAPE ACETATE(A:10*20)		1220210799000S	1	*	
	4	nsp	WIFI ANTENA (BK)		E608051030120S	1	*	
	6	nsp	TAPE(NITTO#500)		A710000520000S	0.18		
	7	963411102180S	BUTTON POWER	WHITE	5090215141100S	1		Ver.3
	7	963411102190S	BUTTON POWER	BLACK	5090215141000S	1		Ver.3
	8	nsp	ACETATE TAPE(C:6*9)		1220210789010S	2		
	9	nsp	TAPE ACETATE(D:15*60)		1220210059010S	1		
	10	963409100390S	DOOR TRAY	WHITE	5040210731100S	1	*	Ver.3
	10	963409100400S	DOOR TRAY	BLACK	5040210731000S	1	*	Ver.3
	11	963404100440S	PANEL SIDE L	WHITE	3060215741100S	1	*	Ver.3
	11	963404100450S	PANEL SIDE L	BLACK	3060215741000S	1	*	Ver.3
	12	nsp	SURPPORTER MECHA		4070212191000S	2	*	Ver.3
	13	nsp	HEAT SINK		2120212118000S	1		
	14	nsp	SUPPORT, WIFI MODULE		4070212141000S	1		
	15	nsp	SPACER, WIFI		4300210291000S	1		
	16	nsp	CLAMP WIRE(MTG)		4330000310000S	1		
	17	963409100430S	HOLDER, IPOD DOCK ESC	WHITE	4320211281300S	1	*	Ver.3
	17	963409100440S	HOLDER, IPOD DOCK ESC	BLACK	4320211281200S	1	*	Ver.3
	18	963436100520S	CUSHION, IPOD	WHITE	4050214275100S	1	*	Ver.3
	18	963436100530S	CUSHION, IPOD	BLACK	4050214275000S	1	*	Ver.3
	19	nsp	CUSHION, IPOD DOCK		4050214289000S	2	*	
	20	963409100350S	COVER,IPOD DOCK(LID)	WHITE	4317215681100S	1	*	Ver.3
	20	963409100360S	COVER,IPOD DOCK(LID)	BLACK	4317215681000S	1	*	Ver.3
	21	963409100460S	COVER, TOP	WHITE	4310215691100S	1	*	Ver.3
	21	963409100470S	COVER, TOP	BLACK	4310215691000S	1	*	Ver.3
	22	nsp	HINGE, ADAPTOR SPRING	WHITE	4090210101100S	1		Ver.3
	22	nsp	HINGE, ADAPTOR SPRING	BLACK	4090210101000S	1		Ver.3
	23	nsp	SPRING, SPRING (IPOD DOCK)		3720210526000S	2		
	24	nsp	BRACKET TOP		4010215686000S	1	*	
	25	nsp	RIVET, WIFI MODULE		1560210031000S	1		
	26	nsp	BUSHING, TERMINAL (RED)	E2, E1C	2410040353020S	2		
	27	nsp	BUSHING, TERMINAL (BLACK)	E2, E1C	2410040353010S	2		
	28	nsp	PLATE, TERMINAL		4470212666000S	1		
	29	nsp	CHASSIS, BOTTOM	E2	3207214436000S	1	*	
	29	nsp	CHASSIS, BOTTOM	JP	3207214436100S	1	*	
	29	nsp	CHASSIS, BOTTOM	E1C	3207214436010S	1	*	Ver.3
	30	nsp	COVER, SCREW		4310215316000S	1	*	
	31	nsp	BRACKET, SMPS		4010214936100S	1	*	
	32	963404100480S	PANEL, SIDE R	WHITE	3060215751100S	1	*	Ver.3
	32	963404100490S	PANEL, SIDE R	BLACK	3060215751000S	1	*	Ver.3
	33	963407100300S	FOOT		4000210621000S	4		
	34	963436100510S	CUSHION, FOOT		4050213125000S	4		
	35	nsp	BRACKET, FRONT		4010215696000S	1	*	
	36	nsp	HOLDER, OLED		4320211121000S	1		Ver.3
	37	963411102280S	BUTTON, ENTER	WHITE	5097215181100S	1	*	Ver.3
	37	963411102290S	BUTTON, ENTER	BLACK	5097215181000S	1	*	Ver.3
	38	963411102300S	BUTTON, CURSOR	WHITE	5097215171100S	1	*	Ver.3
	38	963411102310S	BUTTON, CURSOR	BLACK	5097215171000S	1	*	Ver.3
	39	nsp	WIFI ANTENA (GY)		E608054030120S	1		
	40	963411102220S	BUTTON, SOURCE	WHITE	5090215161100S	1		Ver.3
	40	963411102230S	BUTTON, SOURCE	BLACK	5090215161000S	1		Ver.3
	41	nsp	SPACER, MAIN (6mm)		4300210311000S	2		
	42	nsp	TAPE ACETATE(E:10*30)		1220210589000S	1		
	43	nsp	CUSHION SCREW		4050213025000S	1		
	44	nsp	OIL GREASE		A550210029000S	0.01		
	45	nsp	SHEET LED		1210212149000S	1		
	46	nsp	SUPPORTER LED		4070212203000S	1	*	
	★	963179100040S	DISPLAY,LED MXS4035A OLED		K531040350010S	1		
	★	943302100130D	CD MECHA EBG EM101		8030101010010S	1		
	WIERS							
	★	963606501710S	CABLE,FLAT CARD 1.0MM 1.0*16*100*A(4/4/8/8)*(0.035*0.65)		N711161012480S	1		
	★	963606501430S	CABLE,FLAT CARD 1.0MM 1.0*29*150*B(4/4/8/8)*(0.035*0.65)		N711291522480S	1		
	SCREWS							
	S1	nsp	SCREW (+2S 3*8 ZNW/BH)	WHITE	B020030081B10S	57		
	S1	nsp	SCREW (+2S 3*8 ZNW/BH)	BLACK	B020030081B10S	46		
	S2	nsp	SCREW (+2S 3*8 BK/FH)		B020030083F10S	14		
	S3	nsp	SCREW (+2S 3*10 ZNW/BH)		B020030101B10S	8		
	S4	nsp	SCREW (+2S 2.6*8 BK/BH)		B020026083B10S	3		
	S5	nsp	SCREW (+2S 3*10 DOT BK)		B020030103B11S	12		
	S6	nsp	SCREW (+2S 3*8 BK/BH)	BLACK	B020030083B10S	11		
	38	963411102310S	BUTTON, CURSOR	JP/BLACK	5097215171000S	1	*	
	39	nsp	WIFI ANTENA (GY)		E608054030120S	1		
	40	963411102220S	BUTTON, SOURCE	E2/WHITE	5090215161100S	1		
	40	963411102230S	BUTTON, SOURCE	E2/BLACK	5090215161000S	1		
	40	963411102220S	BUTTON, SOURCE	JP/WHITE	5090215161100S	1		
	40	963411102230S	BUTTON, SOURCE	JP/BLACK	5090215161000S	1		
	41	nsp	SPACER, MAIN (6mm)		4300210311000S	2		
	42	nsp	TAPE ACETATE(E:10*30)		1220210589000S	1		
	43	nsp	CUSHION SCREW		4050213025000S	1		
	44	nsp	OIL GREASE		A550210029000S	0.01		
	45	nsp	SHEET LED		1210212149000S	1		
	46	nsp	SUPPORTER LED		4070212203000S	1	*	
	★	963179100040S	DISPLAY,LED MXS4035A OLED		K531040350010S	1		
	★	943302100130D	CD MECHA EBG EM101		8030101010010S	1		
	WIERS							
	★	963606501710S	CABLE,FLAT CARD 1.0MM 1.0*16*100*A(4/4/8/8)*(0.035*0.65)		N711161012480S	1		
	★	963606501430S	CABLE,FLAT CARD 1.0MM 1.0*29*150*B(4/4/8/8)*(0.035*0.65)		N711291522480S	1		
	SCREWS							
	S1	nsp	SCREW (+2S 3*8 ZNW/BH)	WHITE	B020030081B10S	57		

	Ref. No.	Part No.	Part Name	Remarks		Q'ty	New	Ver
	S1	nsp	SCREW (+2S 3*8 ZNW/BH)	BLACK	B020030081B10S	46		
	S2	nsp	SCREW (+2S 3*8 BK/FH)		B020030083F10S	14		
	S3	nsp	SCREW (+2S 3*10 ZNW/BH)		B020030101B10S	8		
	S4	nsp	SCREW (+2S 2.6*8 BK/BH)		B020026083B10S	3		
	S5	nsp	SCREW (+2S 3*10 DOT BK)		B020030103B11S	12		
	S6	nsp	SCREW (+2S 3*8 BK/BH)	BLACK	B020030083B10S	11		

PARTS LIST OF PACKING & ACCESSORIES

Note The symbols in the column "Remarks" indicate the following destinations.
E2 : Europe model E3 : US & Canada model JP : Japan model E1C : China model
BK : Black model WT : White model

	Ref. No.	Part No.	Part Name	Remarks		Q'ty	New	Ver
	1	nsp	CODE	E2(WT)	MU120101	1		
	1	nsp	CODE	E2(BK)	MU120102	1		
	1	nsp	CODE	JP(WT)	MU120103	1		
	1	nsp	CODE	E1C(BK)	MU120106	1		Ver.3
	1	nsp	CODE	JP(BK)	MU120104	1		
	2	nsp	SHEET POP		5227000007460S	1		
	3	nsp	SLEEVE		5227000007440S	1	*	Ver.3
	4	54111092000AD	START GUIDE	E2	5707000007390S	1		
	4	54111104900AD	START GUIDE	E1C(BK)	5707000007530S	1	*	Ver.3
	4	54111092200AD	START GUIDE	JP	5707000007400S	1		
	5	963533101400S	CUSHION,TOP L/R		6230213304000S	1	*	
	6	963533101410S	CUSHION, BOTTOM L/R		6230213294000S	1	*	
	7	nsp	LABEL MAC		5507000010790S	1		
	8	963116100070S	ANTENNA FM		E605010140020S	1		Ver.3
	9	nsp	TAPE,COLOR (BLUE)		1220211492000S	1		
	10	nsp	POLY BAG(270*70)		6330210642000S	1		
	11	963116100080S	ANTENNA AM	JP	E601019000010S	1		Ver.3
	12	963531102880S	BOX, GIFT	E2	6007212220000S	1	*	
	12	53111032300AD	BOX, GIFT	E1C(BK)	6007212220020S	1	*	Ver.3
	12	963531102890S	BOX, GIFT	JP	6007212220010S	1	*	
	13	963533101420S	CUSHION, TOP CENTER		6230213314000S	1	*	
	14	nsp	TAPE (Double-sided)		A710000510000S	1		
	15	nsp	BATTERY DRY		G670001R50240S	1		
	16	963307101280S	RCD-N8(DENON) RC-1174 WHITE	WT	8300117400010S	1	*	
	16	963307101290S	RCD-N8(DENON) RC-1174 BLACK	BK	8300117400020S	1	*	
!	17	963611012960S	AC CORD	E2	L068250251800S	1		
!	17	972611000440S	AC CORD	E1C(BK)	L068125100220S	1		Ver.3
!	17	963611500460S	AC CORD	JP	L068125070160S	1		
	18	nsp	PE SHEET		6327210009000S	1		
	19	nsp	WARRANTY CARD E1C	E1C(BK)	5727000000401S	1	*	Ver.3
	19	nsp	WARRANTY CARD	JP	5727000002001S	1		
	20	nsp	LABEL CONTROL		5507000010280S	1	*	
	20	nsp	LABEL CONTROL		5507000010290S	1	*	
	20	nsp	LABEL CONTROL		5507000010300S	1	*	
	20	nsp	LABEL CONTROL		5507000010310S	1	*	
	20	nsp	LABEL CONTROL	E1C(BK)	5507000011780S	1	*	Ver.3
	21	nsp	LABEL COLOR	WT	5507020170680S	1		
	22	nsp	LABEL WIFI	E2	5507000008060S	1		
	23	nsp	PACKING TAPE		1220210772000S	1		
	A	nsp	POLY BAG (MENUAL)		6337040062010S	1		
	24	nsp	CARD S.S LIST	E2	577700162001HS	1		Ver.3
	24	nsp	CARD S.S LIST	JP	577720004001CS	1		
	25	54111104500AD	INSTRUCTION MANUAL E1C	E1C(BK)	5707000007930S	1	*	Ver.3
	25	54111092100AD	INSTRUCTION MANUAL JP	JP	5707000007380S	1		
	27	nsp	NOTES ON RADIO MANUAL	E2	5227000007810S	1		
	28	nsp	WPS CAUTION SHEET		5227000007840S	1		
	29	35201017100AD	DISK MANUAL(CD)	E2	6517000001040S	1		
	30	nsp	LABEL MAC		-	1		
	31	nsp	QC PASS CARD	E1C(BK)	577700000020S	1		Ver.3