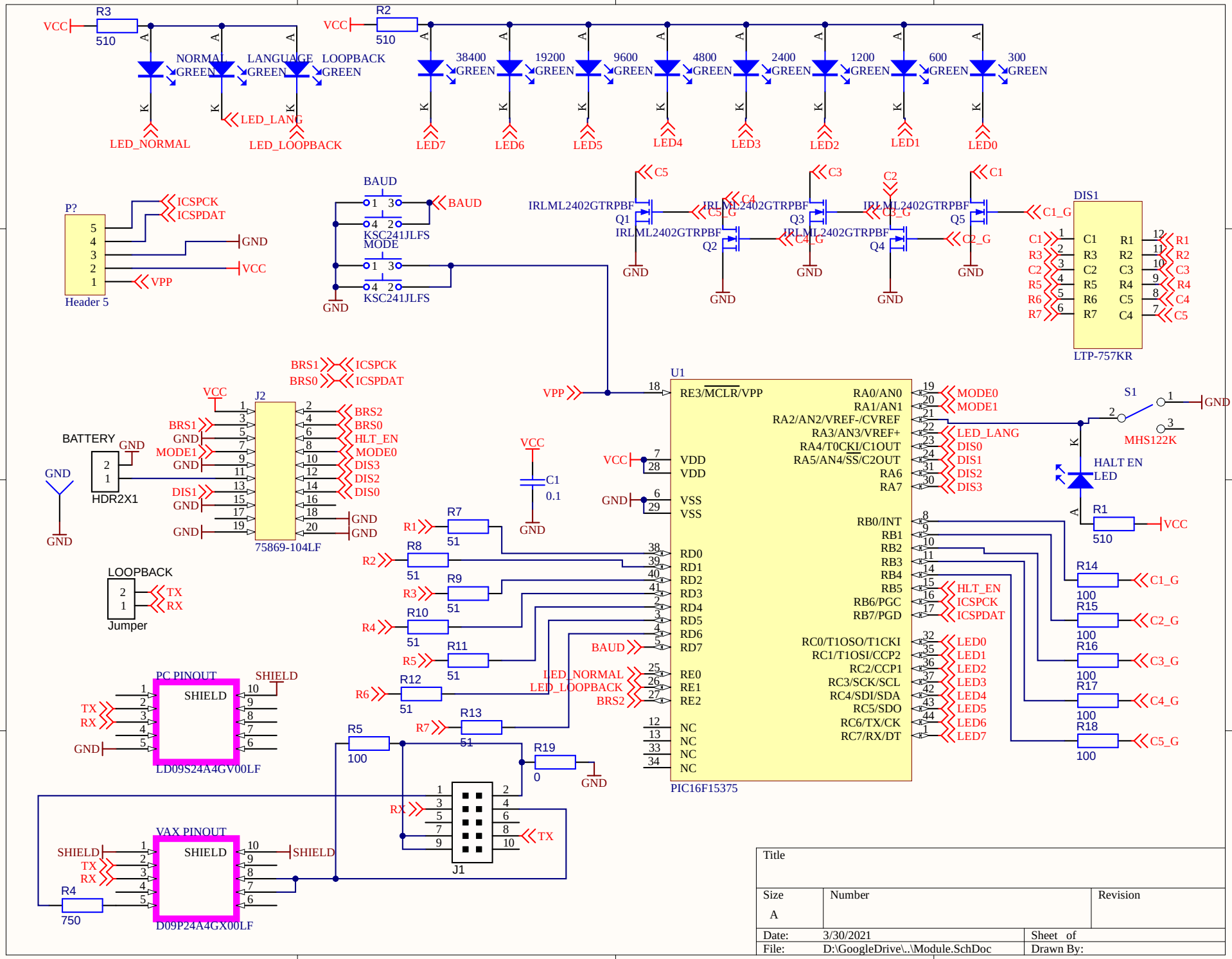

Title		
Size A	Number	Revision
Date: 3/30/2021		Sheet of
File: D:\GoogleDrive\..\Module.SchDoc		Drawn By: