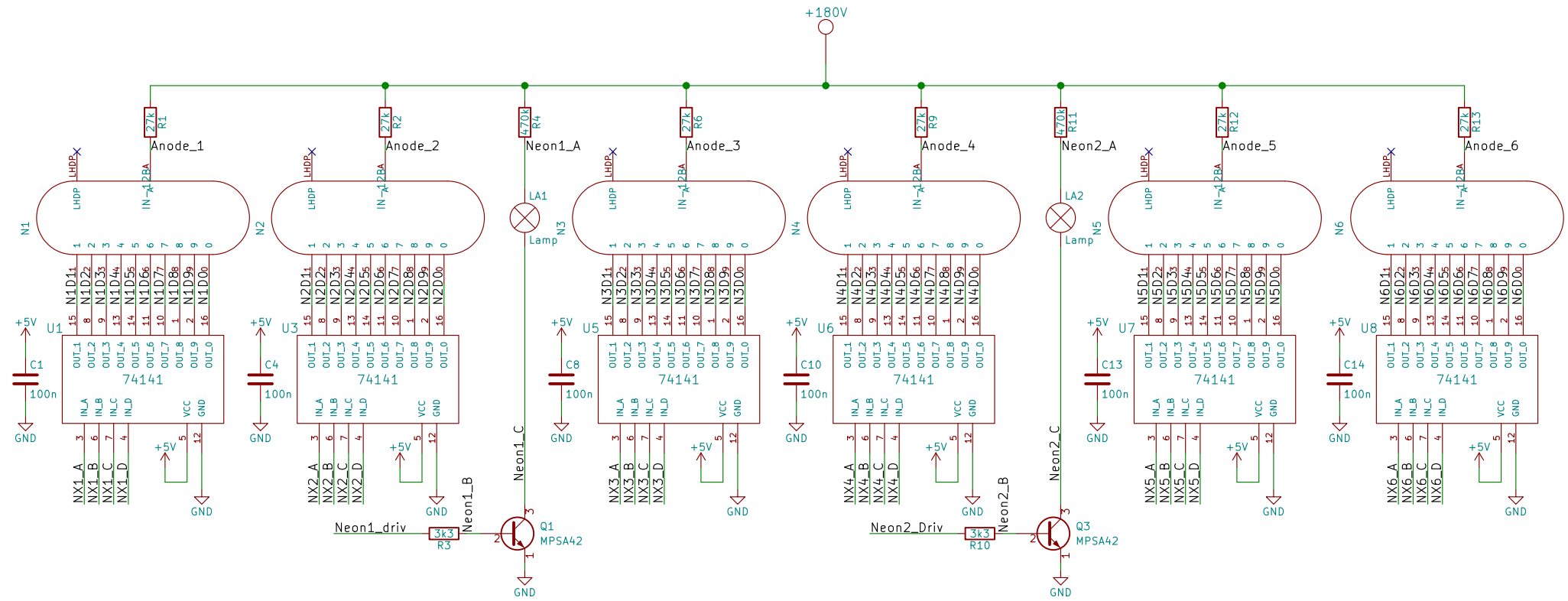

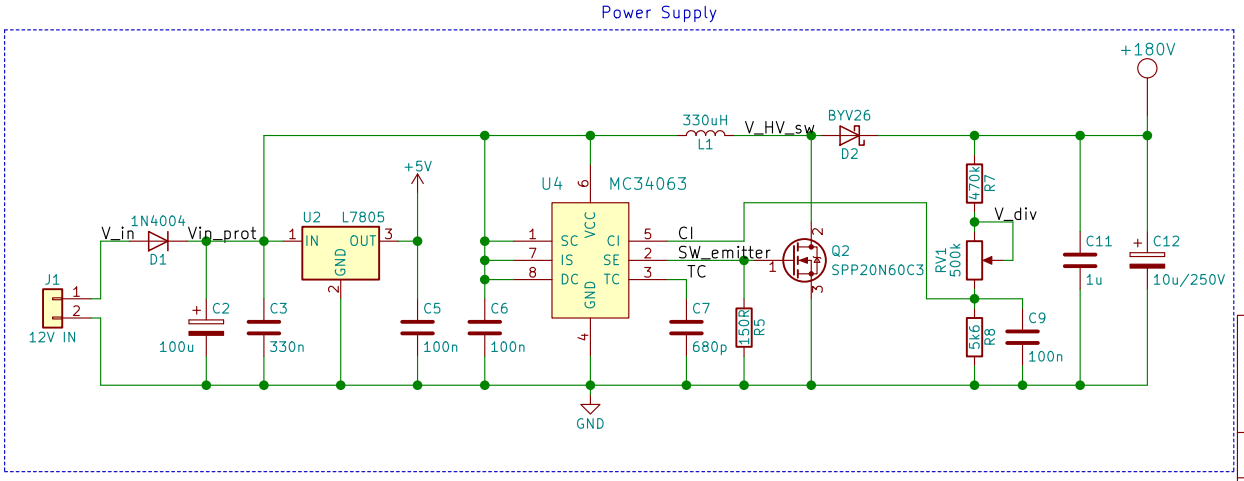

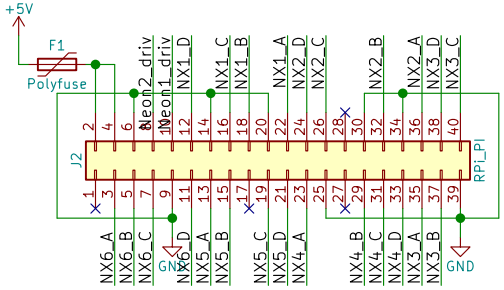

Based on GPS Nixie clock project from Elektor May/June 2016

M. Gossye & J.J. Spaander

Sheet: /

File: nixie_clock.sch

Title: Nixie Tube Clock		
Size: A4	Date: 2018-03-24	**Rev: A**
KiCad E.D.A. kicad (5.1.0)-1		Id: 1/1