Printout

Thursday, February 9, 2023 5:48 PM

Lillian Tucker

This handout expands on "Experiment 41: Differential Amplifiers" in the *Experiments Manual for Contemporary Electronics: Fundamentals, Devices, Circuits, and Systems* by Louis E. Frenzel.

Instructions: Be sure to review the introduction section to Experiment 41 in the Manual. Then, complete this handout and complete the experiment (by making notes in your notebook). **Submit handout and notebook images as a *.PDF** to the D2L dropbox (Assignments > *CMRR and Op Amp Limitations – Simulated Investigation*).

Objectives: Approximate the gain the common-mode rejection ratio (CMRR) of a differential amplifier, and determine which set-up conditions or design related choices can influence CMRR values.

Differential Amplifier Review (Alexander & Sadiku Chapter 5.7):

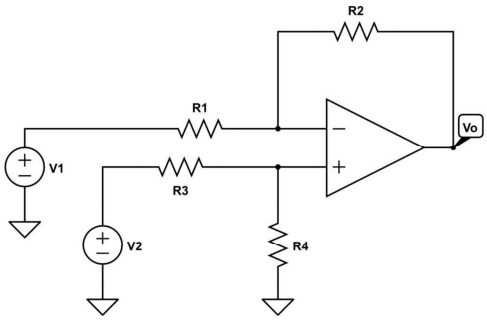

When $R_1 \neq R_2 \neq R_3 \neq R_4$:

$$v_0 = \frac{R_2(1 + R_1/R_2)}{R_1(1 + R_3/R_4)} v_2 - \frac{R_2}{R_1} v_1$$

When $R_1/R_2 = R_3/R_4$:

$$v_0 = \frac{R_2}{R_1}(v_2 - v_1)$$

When $R_1 = R_2 = R_3 = R_4$:

$$v_0 = v_2 - v_1$$

Datasheet Comparison: Compare the AD711(c) datasheet and the LT1037 datasheet. *Hint: you may need to estimate some of these parameters from plots.*

AD711(c) *Typical* Specifications from Datasheet:	**LT1037 *Typical* Specifications from Datasheet:**
Z_{IN} (Ω): 3 x 10^12	R_{IN} (Ω): 5
Z_{OUT} (Ω): 0.01 - 80	R_{OUT} (Ω): 70
V_{OS} (μV): 0.1 x 10 ^ -3	V_{OS} (μV): 40
CMRR (dB): 80 - 10	CMRR (dB): 120
Slew Rate (V/μs): 20	Slew Rate (V/μs): 15
Unity Gain Bandwidth (Hz): 3 x 10 ^6	GBP or GBW (Hz): 60 x 10^6
Best uses and/or Other key features: output amplifier for CMOS DACs perform both 2-quadrant and 4-quadrant operation	Best uses and/or Other key features: Microvolt Comparator with Hysteresis Infrared Detector Preamplifier Phono Preamplifier Tape Head Amplifier LOW FREQUENCY, HIGH CLOSED-LOOP GAIN AMPLIFIER APPLICATIONS

Procedure:

1. Let's begin the analysis with the AD711. Construct the following Circuit in LT Spice. Run a transient analysis.

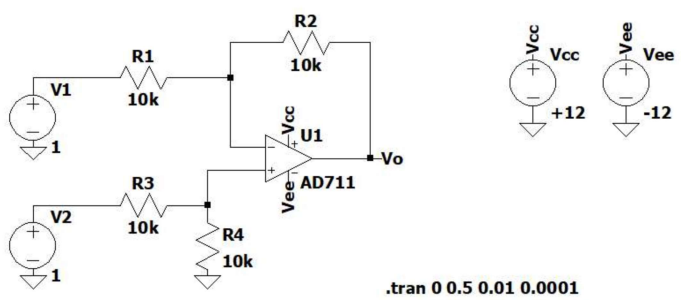

2. Hover the red probe over Vo to get an accurate reading of the output voltage. If the op amp were ideal, it should read 0V. However, with v1 = 1.0V and v2 = 1.0V, you should get a value in the nV range. Now, calculate CMRR using units of V/V and in dB. Recall:
$CMRR = \left|\frac{A}{A_{cm}}\right|$ and $v_0 = A(v_2 - v_1) + A_{cm}(v_{ic})$, where v_{ic} is the average of the input signals.

3. Does CMRR vary based on the voltage values of the DC signals v_1 and v_2? To investigate this, complete the following table.

Table 41-1. CMRR and A_{cm} Calculations using different v_1 and v_2 for the AD711 (c).

v_1 [V]	v_2 [V]	v_0 [nV]	v_{ic} [V]	A_{cm}	CMRR	CMRR [dB]
1.0	1.0	74	1	74	0.0135	-1.44
2.0	2.0	147	1	73.5	0.0136	-1.43
5.0	5.0	365	1	75	0.0133	-1.44
8.0	8.0	576	1	72	0.0139	-1.43

4. **Describe the behavior of CMRR.**

CMRR in dB remains approximately the same through the voltage changes. As for the V/V CMRR, the value gets larger except between 2 v and 5 v where it decreases although the values still stay relatively the same.

(2)

a) $V_{ic} = 1V$

$A_1 = 1 \frac{V}{V}$

$A_{cm} = \frac{74 - 1(1-1)}{1}$

$A_{cm} = 74 \frac{V}{V}$

$CMRR = \frac{1}{74} \frac{V}{V}$

$CMRR = -1.44$ dB

b) $V_{ic} = 2V$

$A = 1 \frac{V}{V}$

$A_{cm} = \frac{147 - 1(2-2)}{2}$

$A_{cm} = 73.5 \frac{V}{V}$

$CMRR = \frac{1}{73.5} \frac{V}{V}$

$CMRR = -1.43$ dB

c) $V_{ic} = 5V$

$A = 1 \frac{V}{V}$

$A_{cm} = \frac{365 - 1(5-5)}{5}$

$A_{cm} = 75 \frac{V}{V}$

$CMRR = \frac{1}{75} \frac{V}{V}$

$CMRR = -1.44$ dB

d) $V_{ic} = 8V$

$A = 1 \frac{V}{V}$

$A_{cm} = \frac{576 - 1(8-8)}{8}$

$A_{cm} = 72 \frac{V}{V}$

$CMRR = \frac{1}{72} \frac{V}{V}$

$CMRR = -1.43$ dB

5. Steps 2-3 should tell you the best CMRR we could hope to achieve because all of the resistors are perfectly matched. In practice, how well an amplifier rejects common-mode signals also depends on how well matched the resistors are. Update your resistor values to match the following circuit diagram. These values were chosen to reflect 1% tolerance in 10 kΩ. Update v1 = 1.0V and v2 = 1.0V.

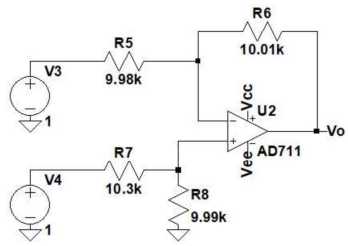

V0 = -16.8 mV

6. Determine CMRR in dB for the circuit in step 5. Do this 2 ways: (1) Assume A = 1 V/V (aka all resistors are really 10 kΩ), and (2) use the gain equation found on page 1 to calculate the gain more precisely.

(b) $V_{iC} = 1\ V$

$$V_o = \frac{R_2\left(1+\frac{R_1}{R_2}\right)}{R_1\left(1+\frac{R_3}{R_4}\right)} V_2 - \frac{R_2}{R_1} V_1$$

$$A_{cm} = \frac{V_o}{V_{iC}} = \frac{-16.8\,m}{1}$$

$$A_{cm} = -16.8\,m$$

$$\downarrow V_1 = V_2$$

$$A = \frac{R_2\left(1+\frac{R_1}{R_2}\right)}{R_1\left(1+\frac{R_3}{R_4}\right)} - \frac{R_2}{R_1}$$

$$A = \frac{10.01k\left(1+\frac{9.98k}{10.01k}\right)}{9.98k\left(1+\frac{10.3k}{9.99k}\right)}$$

$$A = 0.986202$$

$$CMRR = \left|\frac{A}{A_{cm}}\right| = \frac{16.8 \cdot 10^{-3}}{0.986}$$

$$CMRR = 0.017\ \frac{V}{V}$$

$$\boxed{CMRR = -1.359\ dB}$$

7. Let's investigate the CMRR effects when AC signals of various frequencies are used. Change the resistor values to match their ideal settings used in step 1. Make $v_1 = 1\sin(2\pi 1000t)$V and $v_1 = v_2$. *Hint: record the peak-to-peak voltage. Click on the name in the plot to activate the cursors.*

Table 41-2. CMRR and A_{cm} Calculations at different frequencies for the AD711(c). Both v_1 and v_2 have magnitudes of 1 V.

Frequency [Hz]	v_0 [μV$_{pk}$]	v_{ic} [V$_{pk}$]	A_{cm}	CMRR	CMRR [dB]
1.0 k	7.72	1	7.72 u	12953	3.92
10.0 k	76.9	1	77 u	13003	3.16
100.0 k	768.0	1	768 u	1302.1	2.39
1.0 M	8800	1	8800 u	113.63	1.58
10.0 M	89000	1	89000 u	11.236	0.811

8. **Describe the behavior of CMRR as frequency is varied.**

CMRR in dB gets consistently smaller as frequency is increased while the CMRR get exponentially smaller as frequency is increased

9. Repeat steps 1, 2, 7, and 8 for the LT1037 op amp. Steps 2, 7, and 8 are repeated here (as Steps 10-12) for your convenience.

10. Hover the red probe over Vo to get an accurate reading of the output voltage. If the op amp were ideal, it should read 0V. However, with v1 = 1.0V and v2 = 1.0V, you should get a value in the nV range. Now, calculate CMRR using units of V/V and in dB. Recall:

$CMRR = \left|\frac{A}{A_{cm}}\right|$ and $v_0 = A(v_2 - v_1) + A_{cm}(v_{ic})$, where v_{ic} is the average of the input signals.

11

a) $v_{ic} = 1v$
$A = 1\frac{v}{v}$
$A_{cm} = \frac{0.113 \times 10^{-6}}{1}$
$A_{cm} = 0.113\ u$
$CMRR = \frac{1}{0.113u}\ \frac{v}{v}$
$CMRR = 5.34\ dB$

b) $v_{ic} = 1v$
$A = 1\frac{v}{v}$
$A_{cm} = \frac{1.13 \times 10^{-6}}{1}$
$A_{cm} = 1.13u$
$CMRR = \frac{1}{1.13u}\ \frac{v}{v}$
$CMRR = 4.57\ dB$

c) $v_{ic} = 1v$
$A = 1\frac{v}{v}$
$A_{cm} = \frac{11.6 \times 10^{-6}}{1}$
$A_{cm} = 11.6u$
$CMRR = \frac{1}{11.6u}\ \frac{v}{v}$
$CMRR = 3.79\ dB$

d) $v_{ic} = 1v$
$A = 1\frac{v}{v}$
$A_{cm} = \frac{230 \times 10^{-6}}{1}$
$A_{cm} = 230u$
$CMRR = \frac{1}{230u}\ \frac{v}{v}$
$CMRR = 2.80\ dB$

e) $v_{ic} = 1v$
$A = 1\frac{v}{v}$
$A_{cm} = \frac{15300 \times 10^{-6}}{1}$
$A_{cm} = .0153$
$CMRR = \frac{1}{0.0153}\ \frac{v}{v}$
$CMRR = 1.40\ dB$

7

a) $v_{ic} = 1v$
$A = 1\frac{v}{v}$
$A_{cm} = \frac{7.72 \times 10^{-6}}{1}$
$A_{cm} = 7.7 \times 10^{-6}\ \frac{v}{v}$
$CMRR = \frac{1}{8u}\ \frac{v}{v}$ $CMRR = 3.917\ dB$

b) $v_{ic} = 1v$
$A = 1\frac{v}{v}$
$A_{cm} = \frac{76.9 \times 10^{-6}}{1}$
$A_{cm} = 77u\frac{v}{v}$
$CMRR = \frac{1}{77u}$ $CMRR = 3.16\ dB$

c) $v_{ic} = 1v$
$A = 1\frac{v}{v}$
$A_{cm} = \frac{768 \times 10^{-6}}{1}$
$A_{cm} = 768u\frac{v}{v}$
$CMRR = \frac{1}{768u}$ $CMRR = 2.39\ dB$

d) $v_{ic} = 1v$
$A = 1\frac{v}{v}$
$A_{cm} = \frac{8.8 \times 10^{-3}}{1}$
$A_{cm} = 8.8\ m\frac{v}{v}$
$CMRR = \frac{1}{8.8m}$ $CMRR = 1.58\ dB$

e) $v_{ic} = 1v$
$A = 1\frac{v}{v}$
$A_{cm} = \frac{89 \times 10^{-3}}{1}$
$A_{cm} = 89\ m\frac{v}{v}$
$CMRR = \frac{1}{89m}$ $CMRR = 0.811\ dB$

11. Let's investigate the CMRR effects when AC signals of various frequencies are used. Change the resistor values to match their ideal settings used in step 1. Make $v_1 = 1\sin(2\pi 1000t)$V and $v_1 = v_2$.

Table 41-3. CMRR and A_{cm} Calculations at different frequencies for the LT1037. Both v_1 and v_2 have magnitudes of 1 V.

Frequency [Hz]	v_0 **[μV$_{pk}$]**	v_{ic} **[V$_{pk}$]**	A_{cm}	**CMRR**	**CMRR [dB]**
1.0 k	0.113	1	0.113 u	8849557	5.34
10.0 k	1.13	1	1.13 u	884956	4.57
100.0 k	11.6	1	11.6 u	86206.9	3.79
1.0 M	230	1	230 u	4347.83	2.80
10.0 M	15300	1	153000 u	65.359	1.40

12. **Describe the behavior of CMRR as frequency is varied.**

CMRR in dB gets consistently smaller as frequency is increased while the CMRR get exponentially smaller as frequency is increased

13. Compare the performance between the AD711 and LT1037. Discuss CMRR and other features. When would 1 be a better choice over another?

CMRR in dB gets consistently smaller as frequency is increased while the CMRR get exponentially smaller as frequency is increased
The performance between the AD711 and LT1037 was similar. The increase of Vo was the same for both op amps but AD711 was about 10x larger for the same conditions. As for CMRR [V/V] , the difference was more drastic for LT1037 than it was for AD711 for varying frequencies. The change for LT1037 was approximately 10^5 and 10^3 for AD711.

Although both amplifiers are high speed precision, LT1037 is better for low noise conditions. AD711 is better for higher noise conditions because one of its main applications is an active filter