McMASTER-CARR®

18-8 Stainless Steel Pan Head Torx Screws

M2 x 0.40 mm Thread Size, 12 mm Long

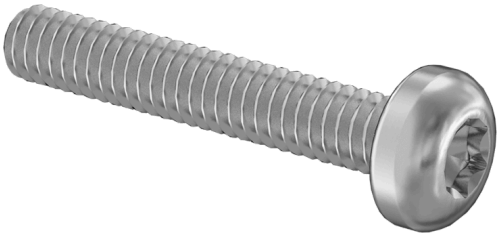

Delivers Monday

$13.79 per pack of 100
90362A141

Thread	
Size	M2
Pitch	0.4 mm
Direction	Right Hand
Spacing	Coarse
Type	Metric
Fit	Metric Class 6g
Tip Type	Flat
Fastener Head Type	Rounded
Head	
Style	Pan
Profile	Standard
Height	1.6 mm
Diameter	4 mm
Drive	
Style	Torx
Size	T6
Length	12 mm
Threading	Fully Threaded
Tensile Strength	70,000 psi
Specifications Met	ISO 14583
Certificate Form	Digital
Certificate Type	Material Certificate with Traceable Lot Number
Hardness	Not Rated
Material	18-8 Stainless Steel
Performance	Corrosion Resistant
System of Measurement	Metric
Country of Origin	Canada, China, Germany, India, Italy, Japan, Mexico, Taiwan, Thailand, United States, Vietnam
DFARS Compliance	Not Specialty Metals Compliant
Export Control Classification Number (ECCN)	EAR99
REACH Compliance	REACH (EC 1907/2006) (02/04/2026, 253 SVHC) Compliant
RoHS Compliance	RoHS 3 (2015/863/EU) Compliant
Schedule B Number	731815.9000
U.S.–Mexico–Canada Agreement (USMCA) Qualifying	No

The most corrosion-resistant pan head Torx screws we offer. Pan heads have a moderate height and width profile, offering a middle ground between

narrower button heads and wider truss heads. With a deep six-lobe opening, the Torx drive prevents your driver from slipping and stripping the drive. Also known as star drives, they withstand more torque than slotted, Phillips, and hex drives.

Length is measured from under the head.

18-8 Stainless Steel—The choice for wet and outdoor environments, these screws won't rust. However, they don't hold up to the harsh chemicals that 316 stainless steel can.

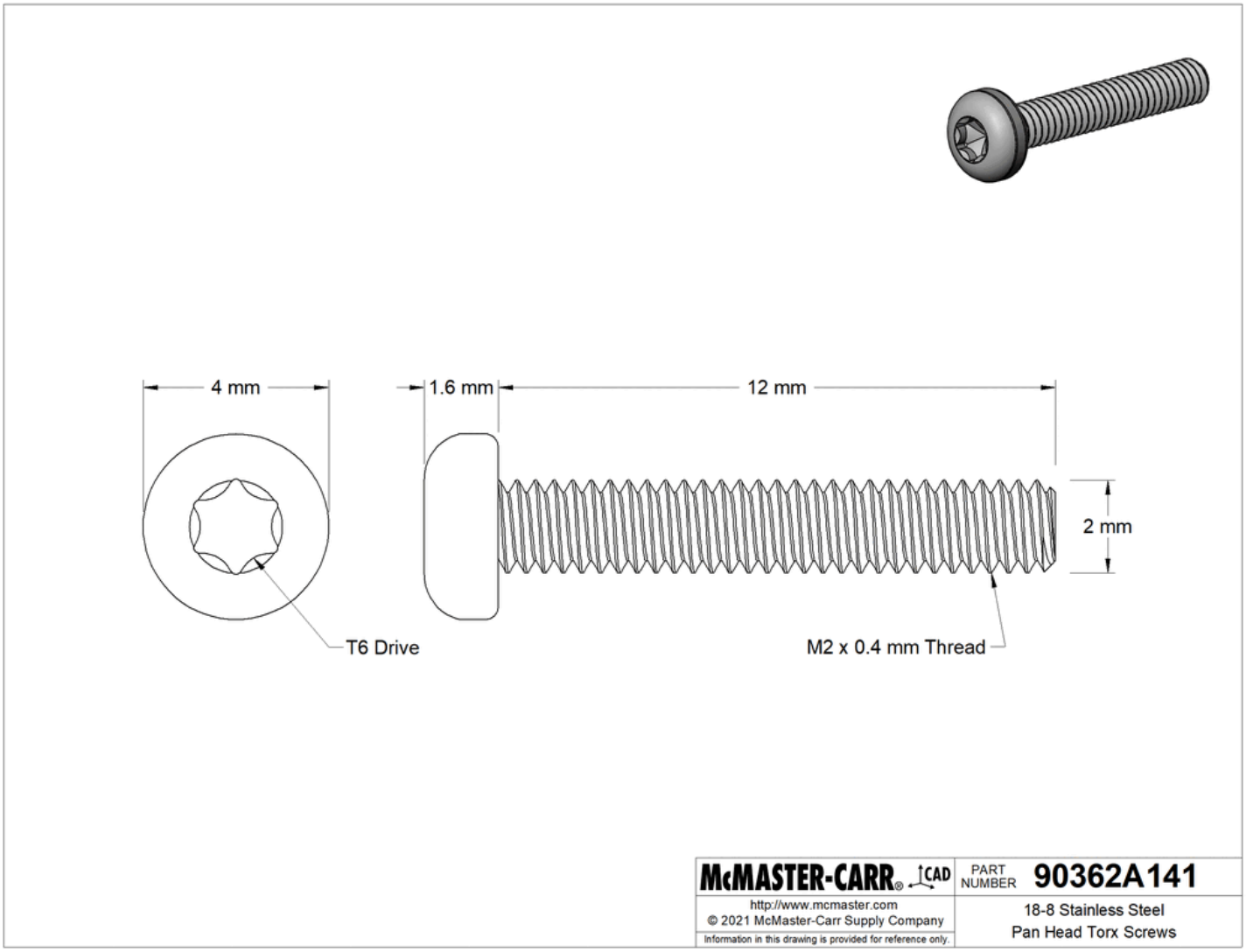

The information in this 3-D model is provided for reference only.