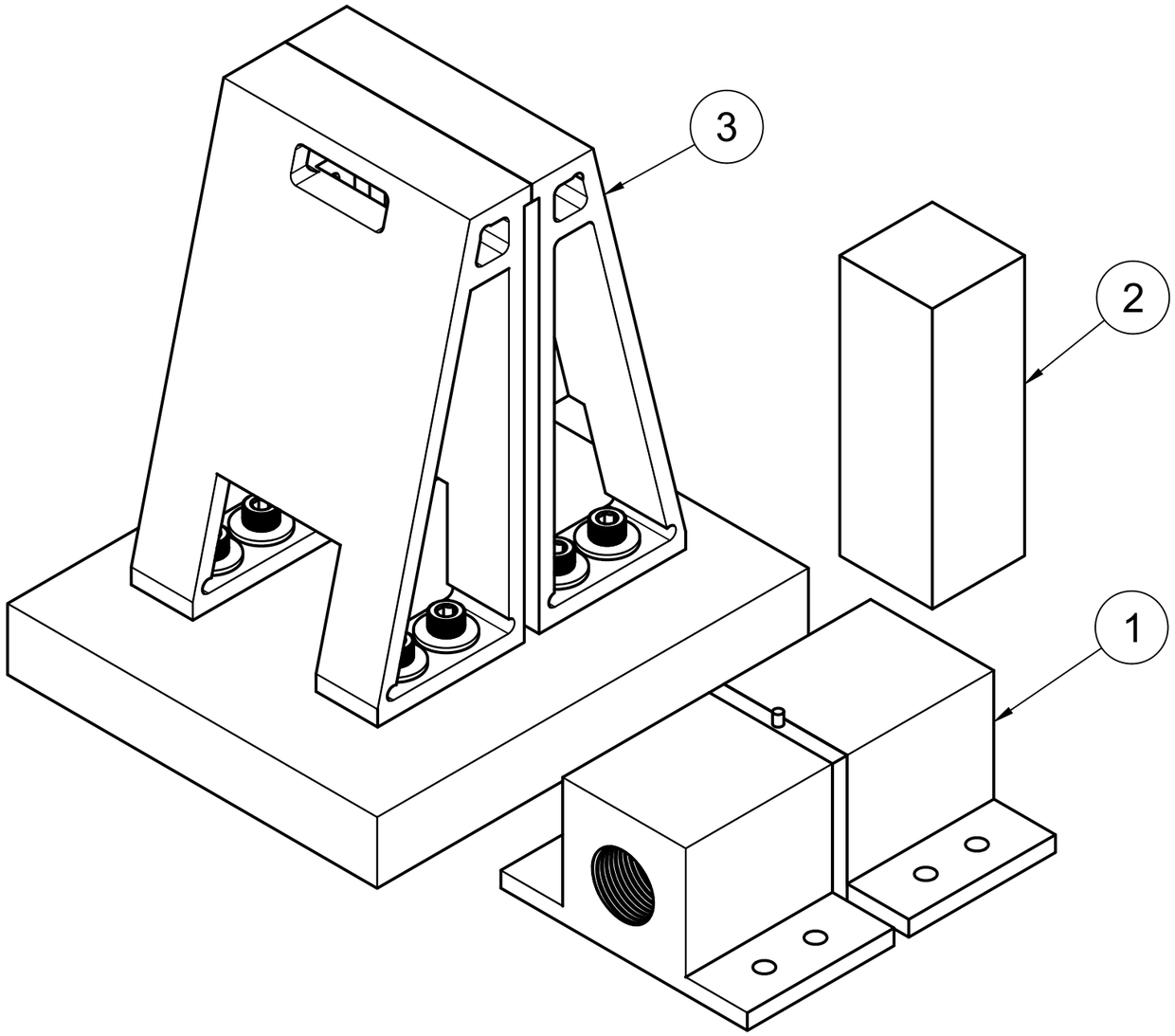

PTCD Sub-Assembly Identification		
Item	Name	Number
1	Valve Sub-Assembly	V0
2	Actuator Sub-Assembly	A0
3	Mount Sub-Assembly	M0

Department: UC DAVIS COLLEGE OF ENGINEERING

Part: Complete Assembly

Team: THE NOBLE AGGIE LABS

Rev.: 1

Sponsor: Sandia National Laboratories

UNLESS OTHERWISE SPECIFIED
DIMENSIONS ARE IN MM

TOLERANCES:
X.X = ± 0.05
X.XX = ± 0.025
X.XXX = ± 0.01

DWG No.: C0

Material:

Scale: 3:4

Date of issue: 03/20/2026

Sheet: 1/14

Parts List			
Item	Qty	Part Name	Part Number
1	1	Housing Center	V1
2	1	Valve Orifice	V5
3	1	Valve Stem	V4
4	1	Bellows	V6
5	1	Housing Inlet v3	V2
6	1	Housing Outlet v4	V3

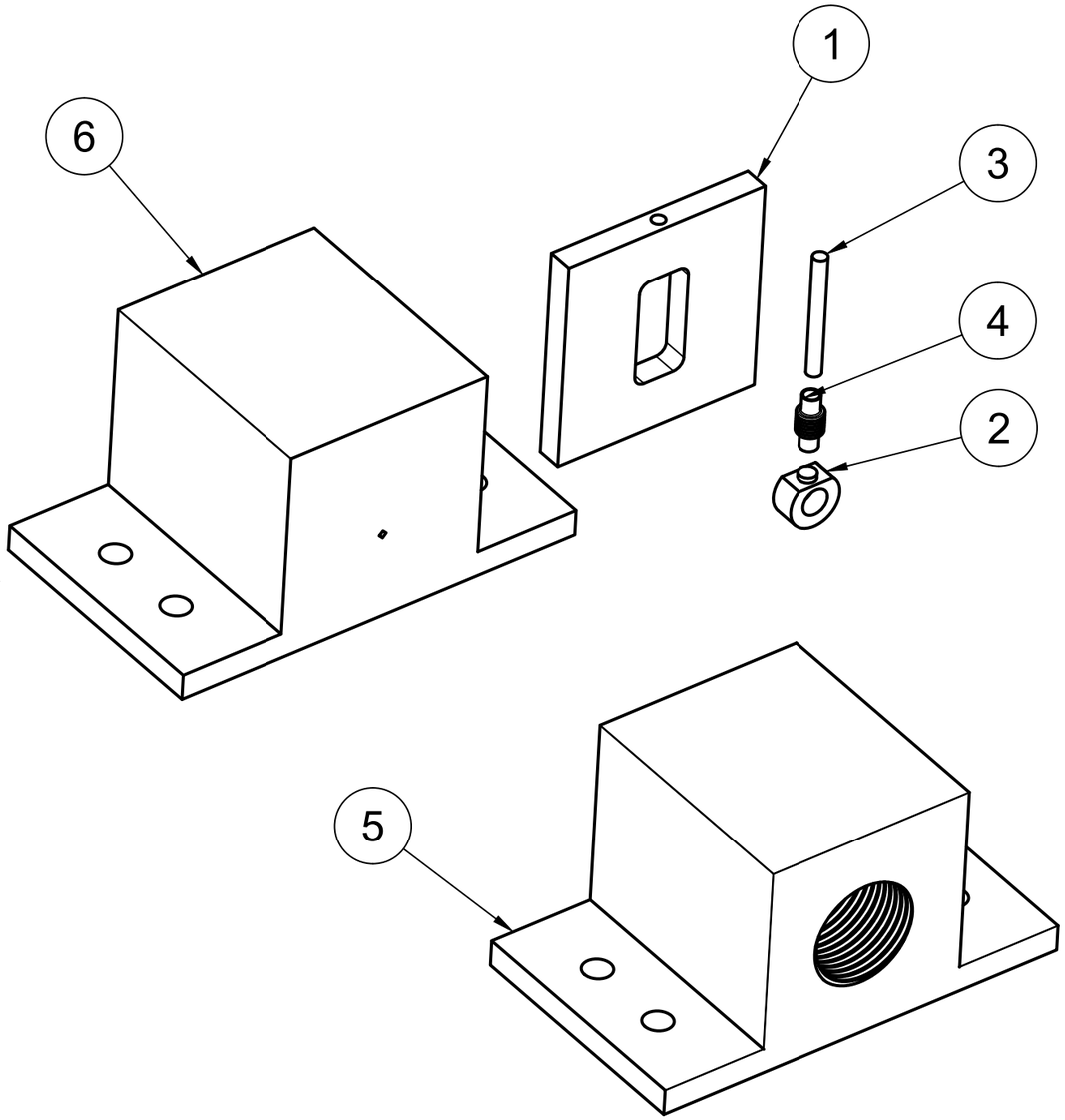

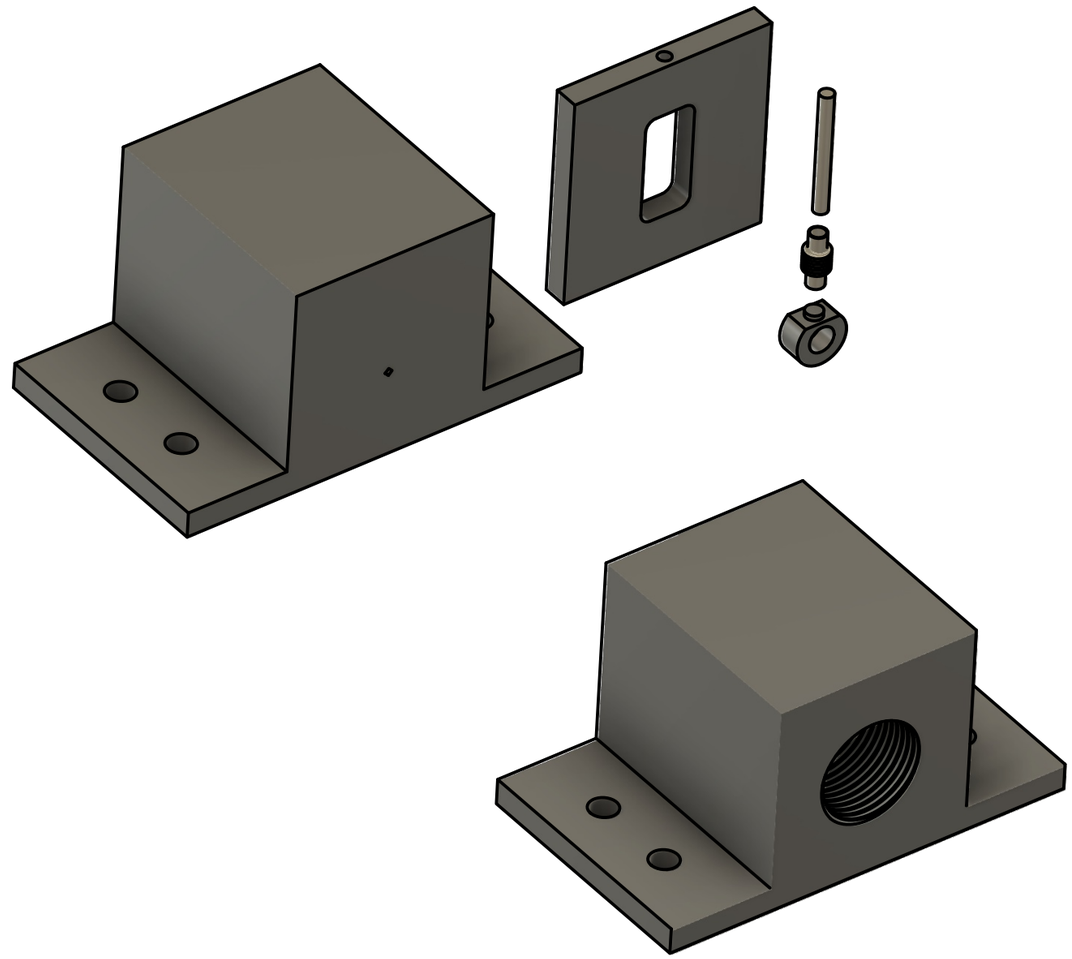

Department: UC DAVIS COLLEGE OF ENGINEERING

Part: Valve Sub-Assembly

Team: THE NOBLE AGGIE LABS

Rev.: 1

Sponsor: Sandia National Laboratories

UNLESS OTHERWISE SPECIFIED
DIMENSIONS ARE IN MM

TOLERANCES:
X.X = ± 0.05
X.XX = ± 0.025
X.XXX = ± 0.01

DWG No.: V0

Material:

Scale: 1:1

Date of Issue: 03/20/2026

Sheet: 2/14

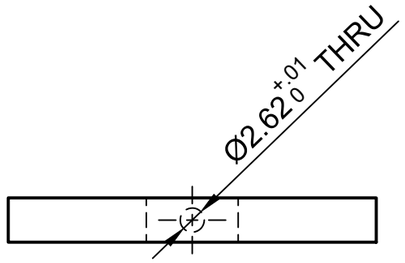

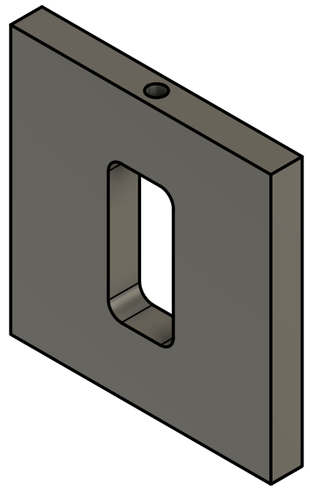

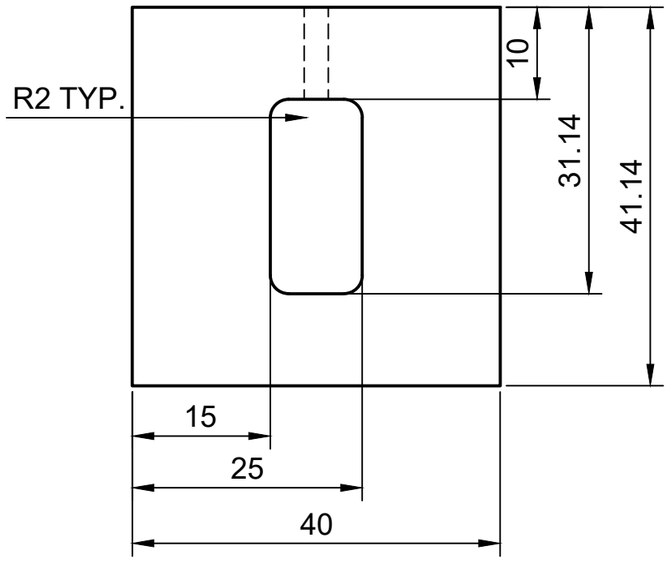

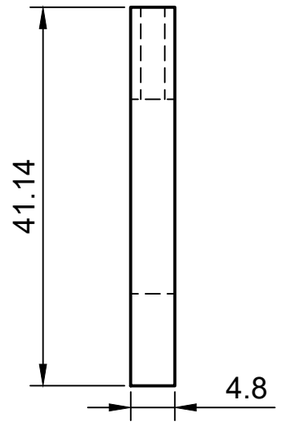

Department: UC DAVIS COLLEGE OF ENGINEERING		Part: Housing Center	
		Team: THE NOBLE AGGIE LABS	Rev.: 1
Sponsor: Sandia National Laboratories	UNLESS OTHERWISE SPECIFIED DIMENSIONS ARE IN MM TOLERANCES: X.X = ± 0.05 X.XX = ± 0.025 X.XXX = ± 0.01	DWG No.: V1	Material: 1018 Steel
		Scale: 3:2	Date of issue: 03/20/2026
			Sheet: 3/14

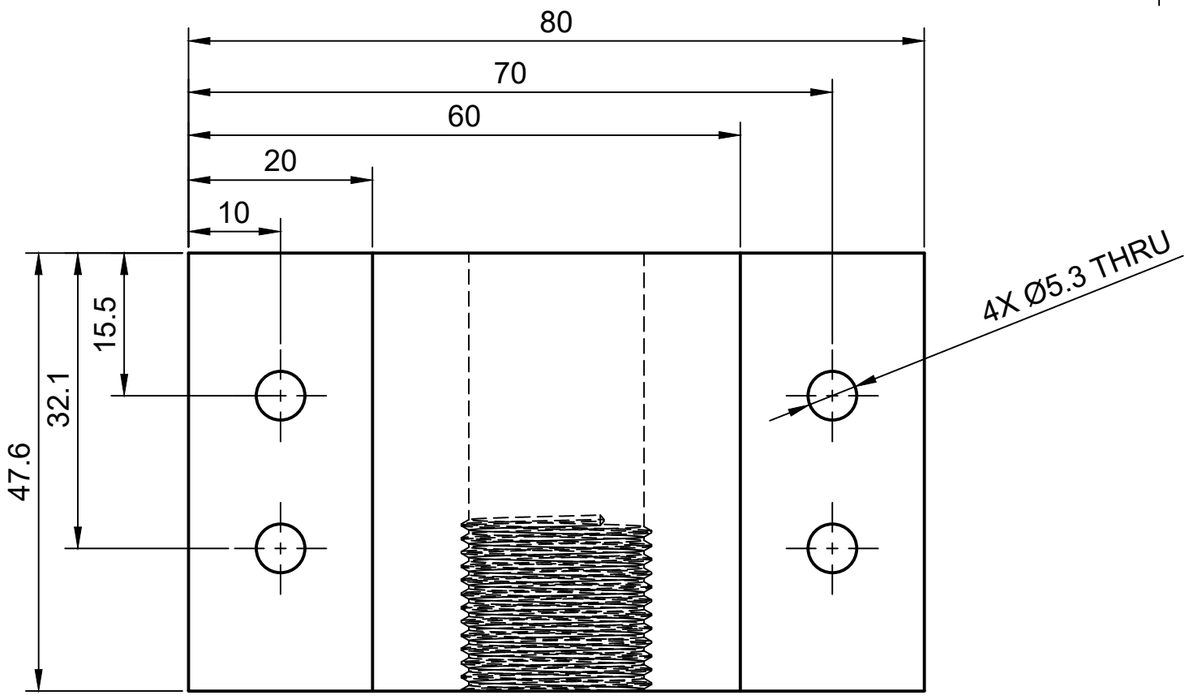

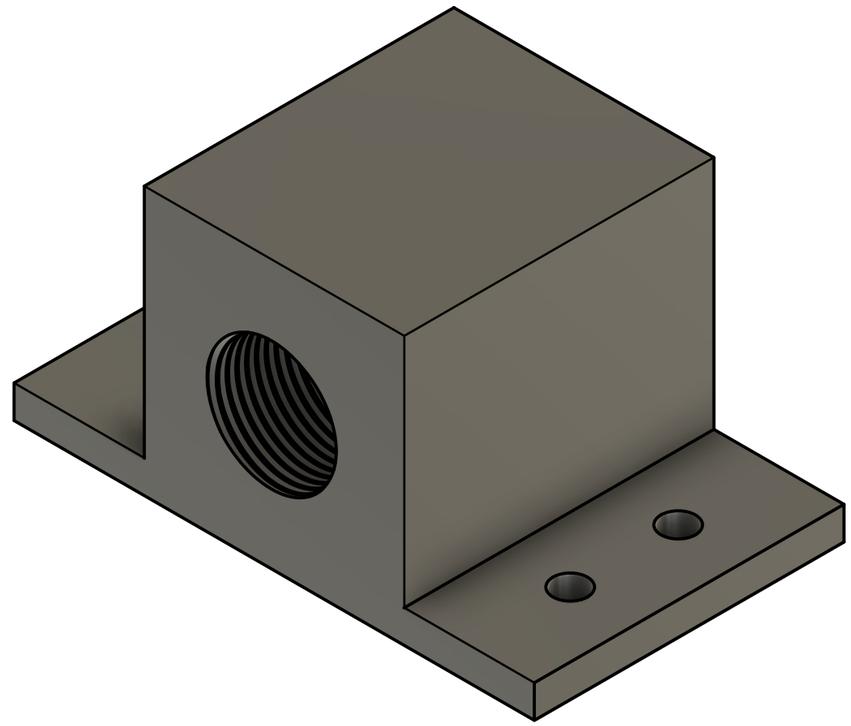

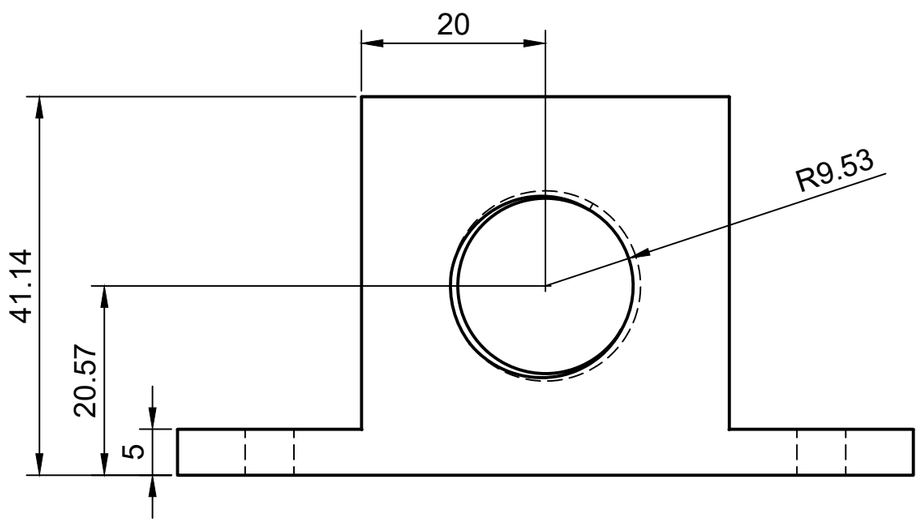

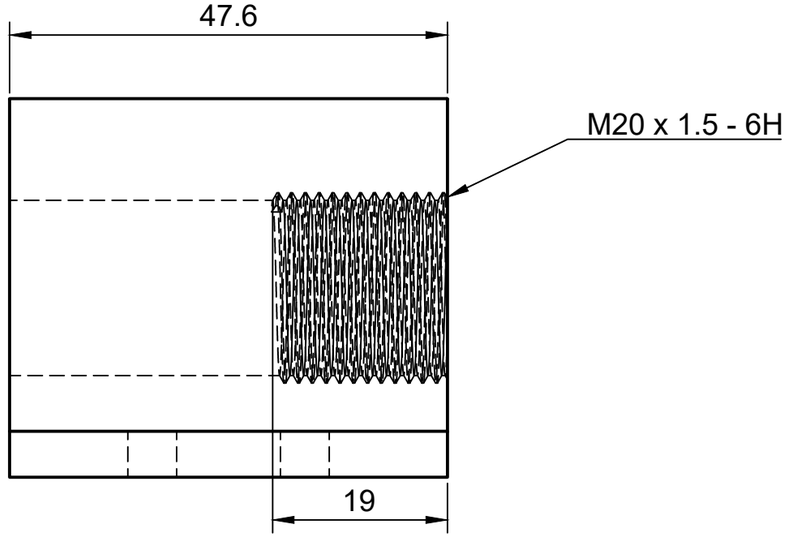

Department: UC DAVIS COLLEGE OF ENGINEERING		Part: Housing Inlet	
		Team: THE NOBLE AGGIE LABS	Rev.: 1
Sponsor: Sandia National Laboratories	UNLESS OTHERWISE SPECIFIED DIMENSIONS ARE IN MM TOLERANCES: X.X = ± 0.05 X.XX = ± 0.025 X.XXX = ± 0.01	DWG No.: V2	Material: 1018 Steel
		Scale: 3:2	Date of issue: 03/20/2026
			Sheet: 4/14

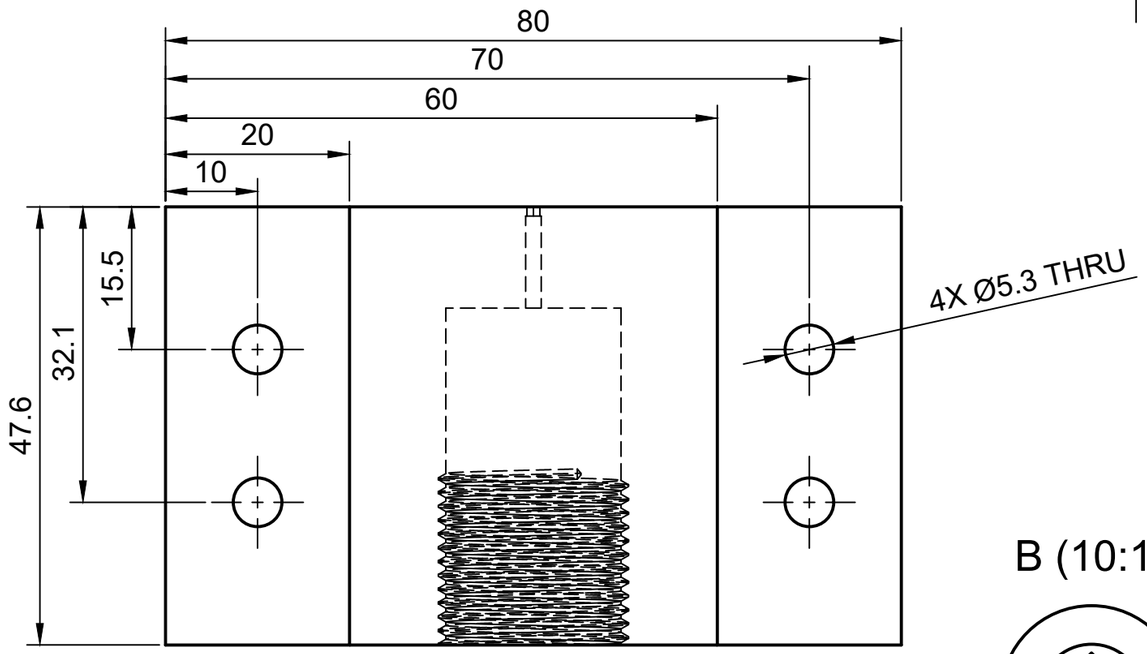

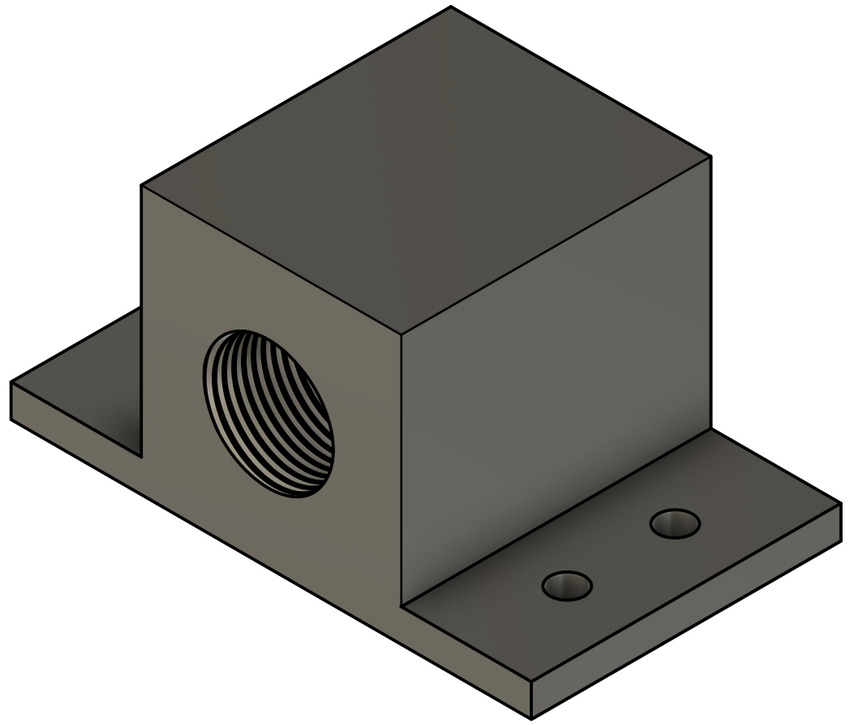

B (10:1)

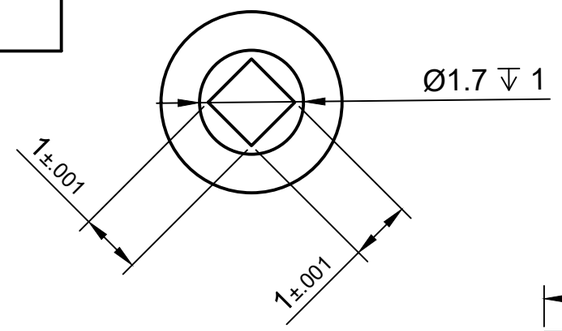

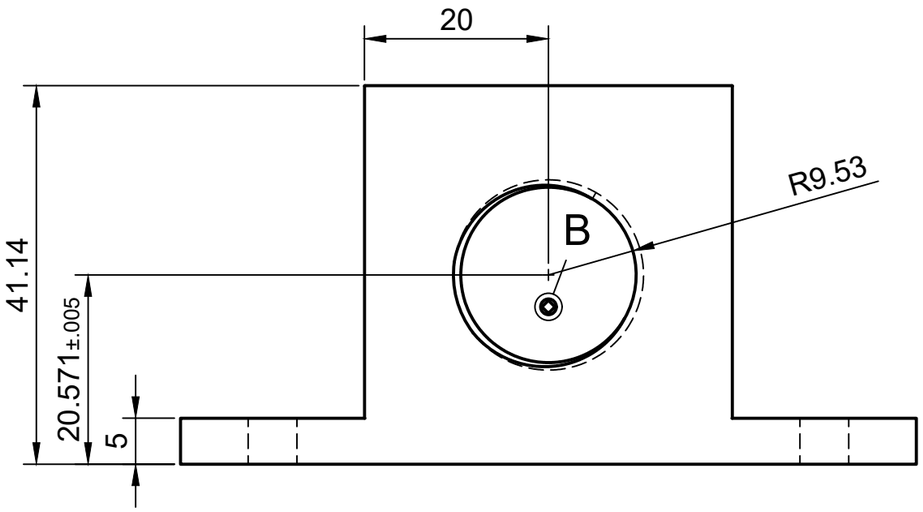

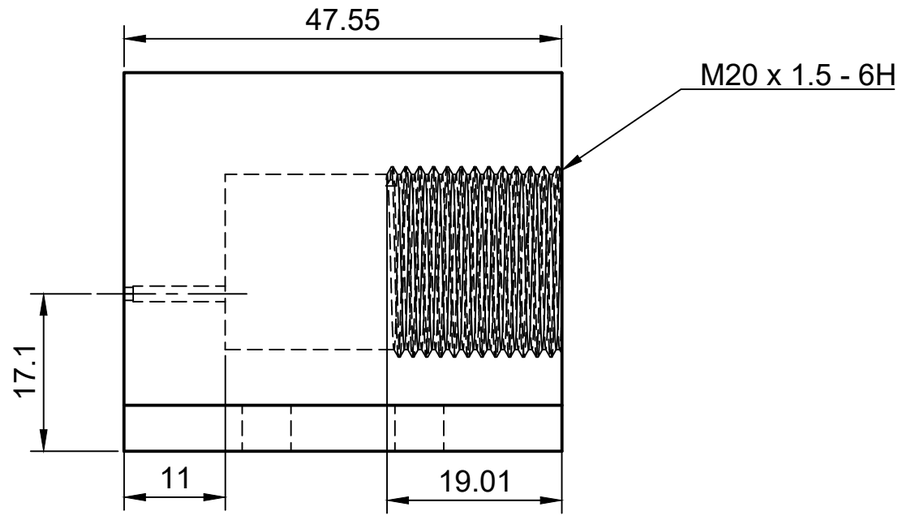

Department: UC DAVIS COLLEGE OF ENGINEERING		Part: Housing Outlet	
		Team: THE NOBLE AGGIE LABS	Rev.: 1
Sponsor: Sandia National Laboratories	UNLESS OTHERWISE SPECIFIED DIMENSIONS ARE IN MM TOLERANCES: X.X = ± 0.05 X.XX = ± 0.025 X.XXX = ± 0.01	DWG No.: V3	Material: 1018 Steel
		Scale: 3:2	Date of issue: 03/20/2026
			Sheet: 5/14

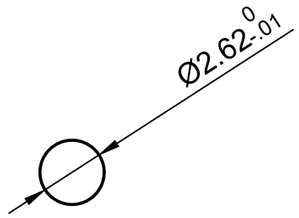

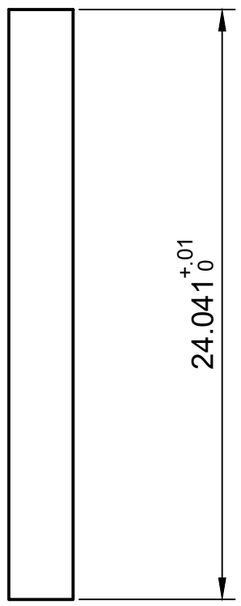

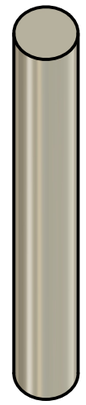

Department: UC DAVIS COLLEGE OF ENGINEERING		Part: Valve Stem	
		Team: THE NOBLE AGGIE LABS	Rev.: 1
Sponsor: Sandia National Laboratories	UNLESS OTHERWISE SPECIFIED DIMENSIONS ARE IN MM TOLERANCES: X.X = ± 0.05 X.XX = ± 0.025 X.XXX = ± 0.01	DWG No.: V4	Material: Invar 36
		Scale: 4:1	Date of issue: 03/20/2026
			Sheet: 6/14

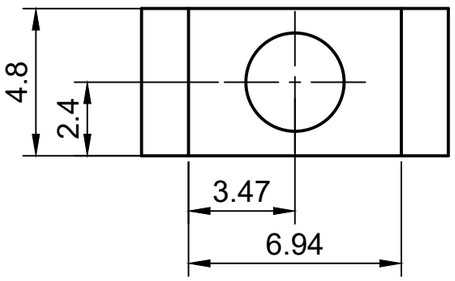

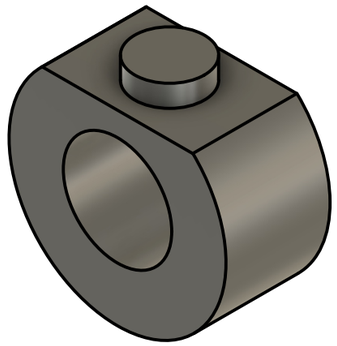

A (15:1)

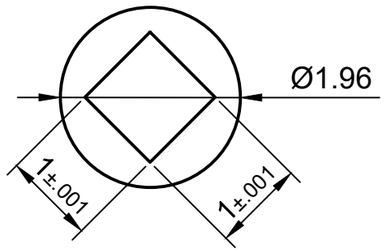

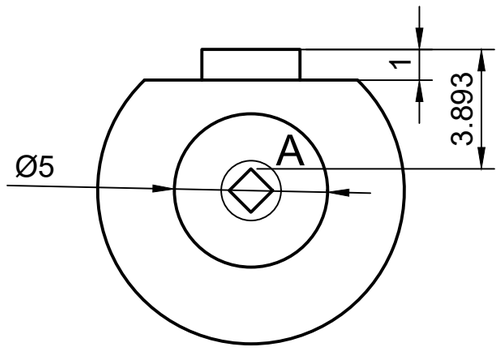

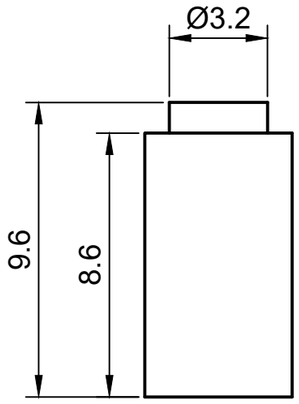

Department: UC DAVIS COLLEGE OF ENGINEERING		Part: Valve Orifice	
		Team: THE NOBLE AGGIE LABS	Rev.: 1
Sponsor: Sandia National Laboratories	UNLESS OTHERWISE SPECIFIED DIMENSIONS ARE IN MM TOLERANCES: X.X = ± 0.05 X.XX = ± 0.025 X.XXX = ± 0.01	DWG No.: V5	Material: 1018 Steel
		Scale: 5:1	Date of issue: 03/20/2026
			Sheet: 7/14

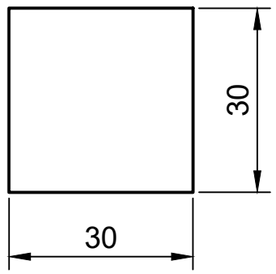

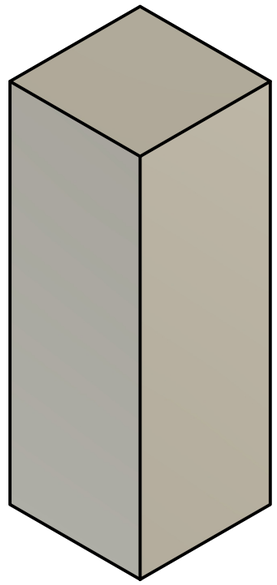

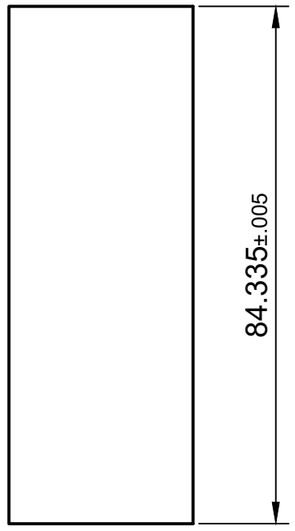

Department: UC DAVIS COLLEGE OF ENGINEERING		Part: Actuator	
		Team: THE NOBLE AGGIE LABS	Rev.: 1
Sponsor: Sandia National Laboratories	UNLESS OTHERWISE SPECIFIED DIMENSIONS ARE IN MM TOLERANCES: X.X = ± 0.05 X.XX = ± 0.025 X.XXX = ± 0.01	DWG No.: A1	Material: 6061 Aluminium
		Scale: 1:1	Date of issue: 03/20/2026
			Sheet: 8/14

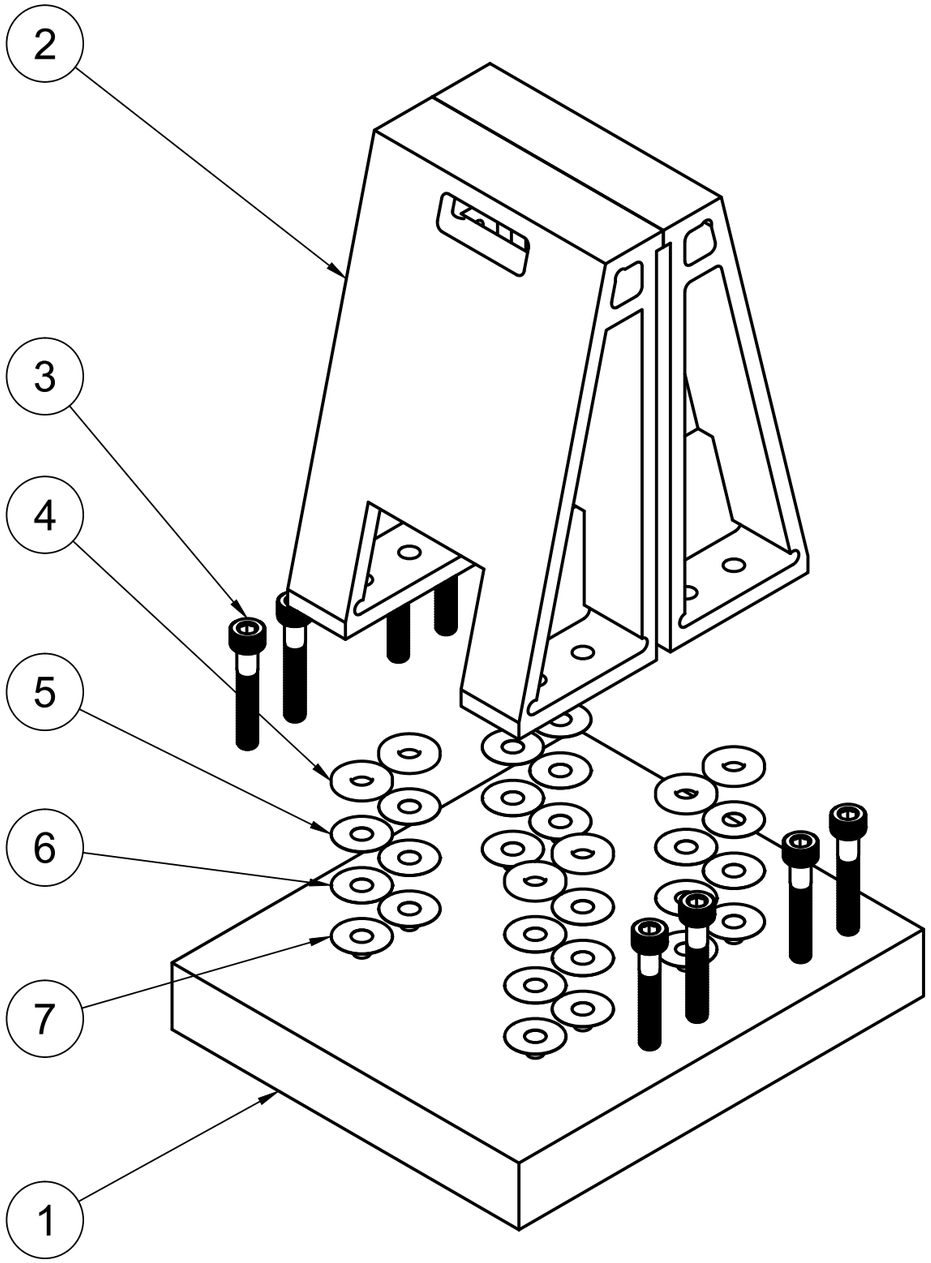

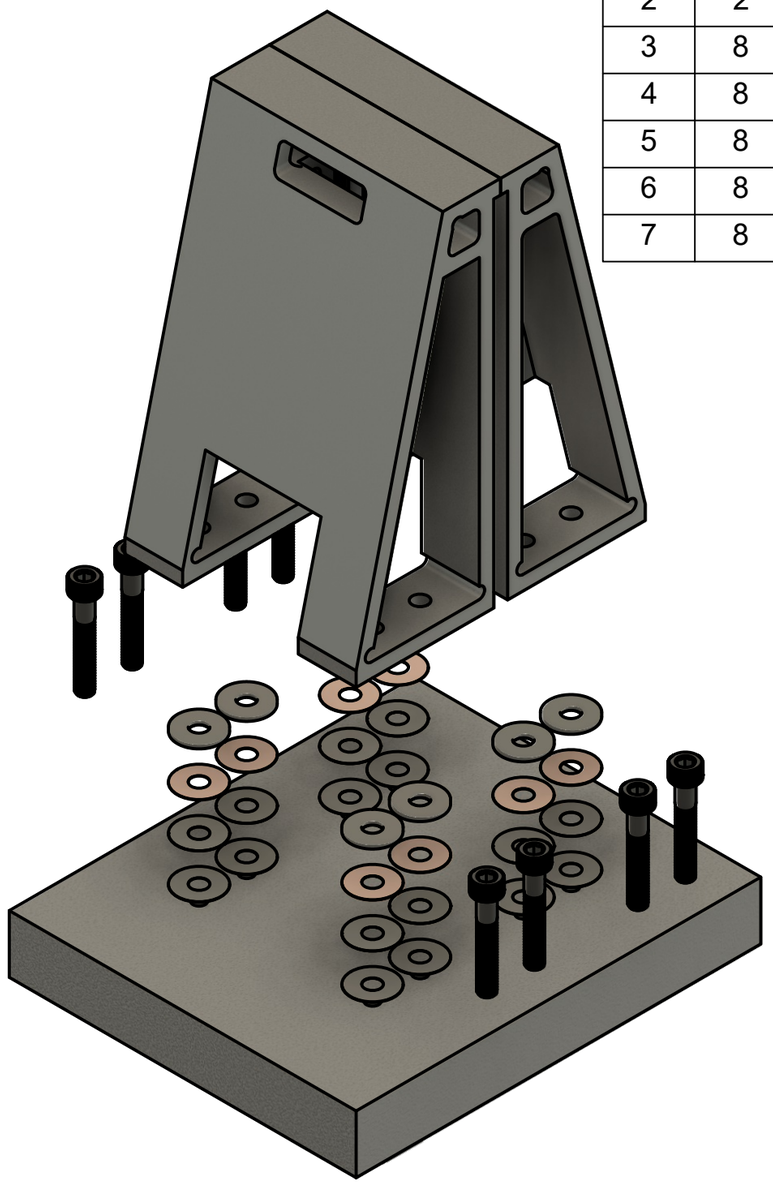

Parts List			
Item	Qty	Part Name	Part Number
1	1	Fixture	M2
2	2	Mount	M1
3	8	Screw	M3
4	8	Standard Washer	M4
5	8	Crush Washer	M7
6	8	Thin Shim Washer	M6
7	8	Thick Shim Washer	M5

Department: UC DAVIS COLLEGE OF ENGINEERING

Part: Mount Sub-Assembly

Team: THE NOBLE AGGIE LABS

Rev.: 1

Sponsor: Sandia National Laboratories

UNLESS OTHERWISE SPECIFIED
DIMENSIONS ARE IN MM
TOLERANCES:
X.X = ± 0.05
X.XX = ± 0.025
X.XXX = ± 0.01

DWG No.: M0

Material:

Scale: 2:3

Date of Issue: 03/20/2026

Sheet: 9/14

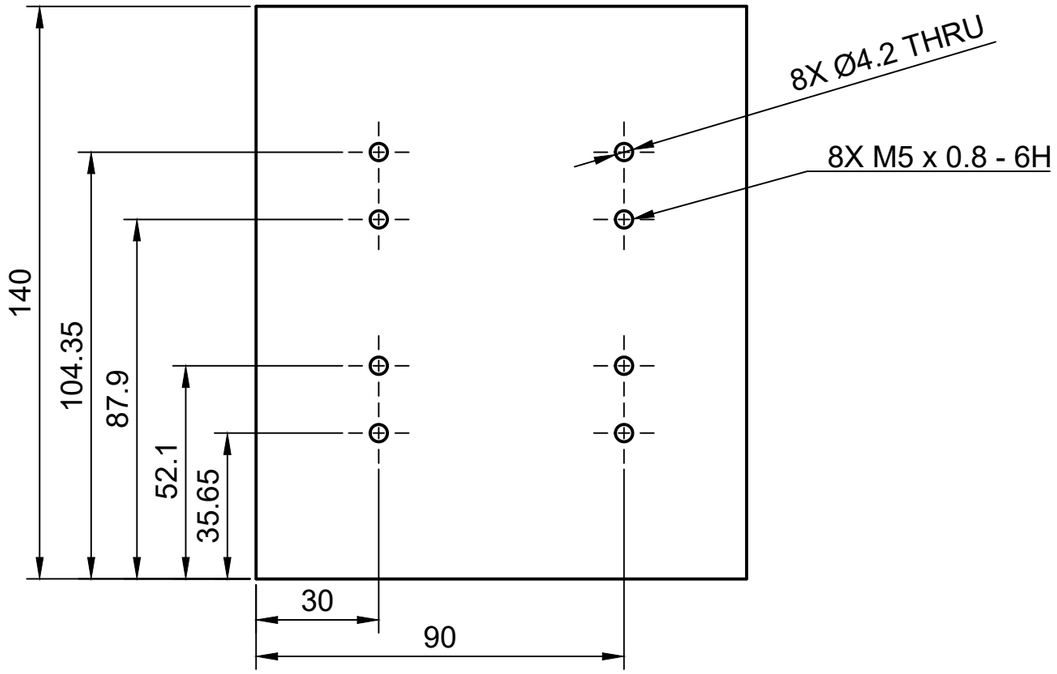

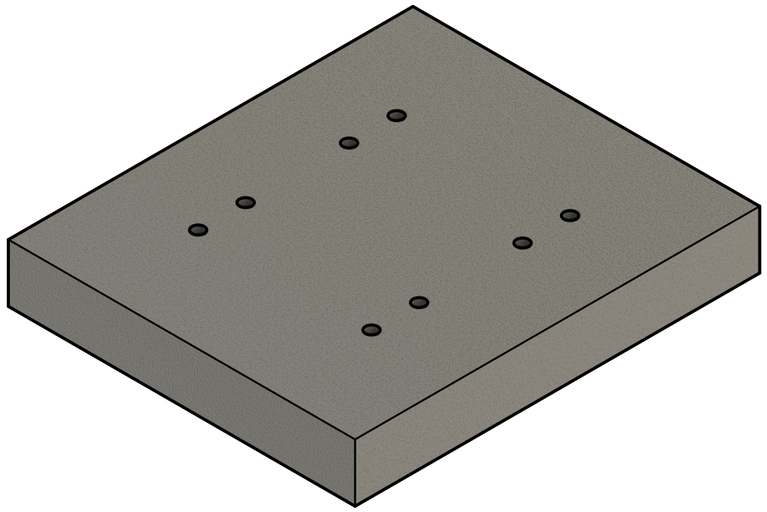

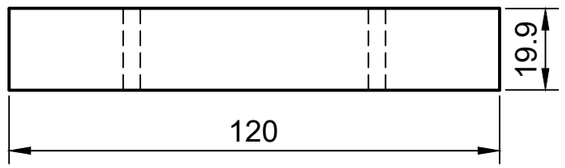

Department: UC DAVIS COLLEGE OF ENGINEERING		Part: Fixture	
		Team: THE NOBLE AGGIE LABS	Rev.: 1
Sponsor: Sandia National Laboratories	UNLESS OTHERWISE SPECIFIED DIMENSIONS ARE IN MM TOLERANCES: X.X = ± 0.05 X.XX = ± 0.025 X.XXX = ± 0.01	DWG No.: M1	Material: 1018 Steel
		Scale: 2:3	Date of issue: 03/20/2026
			Sheet: 10/14

D-D (2:3)

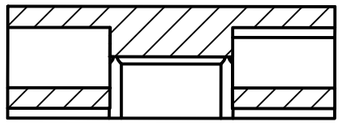

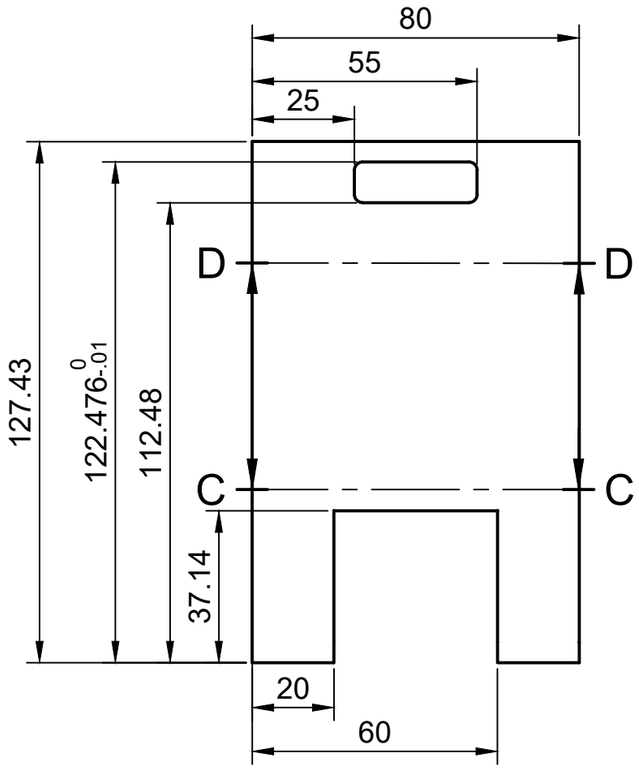

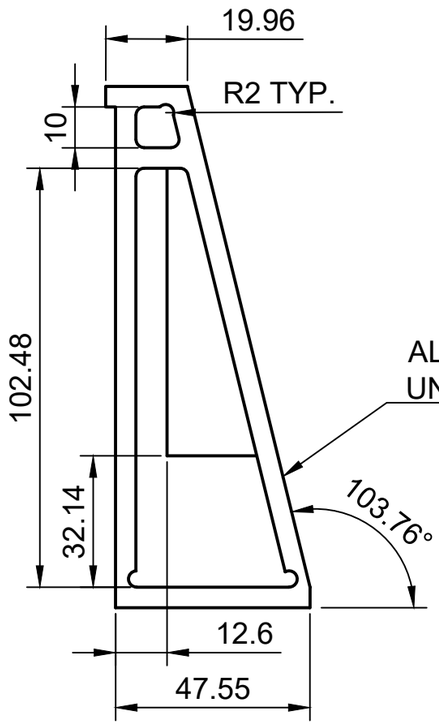

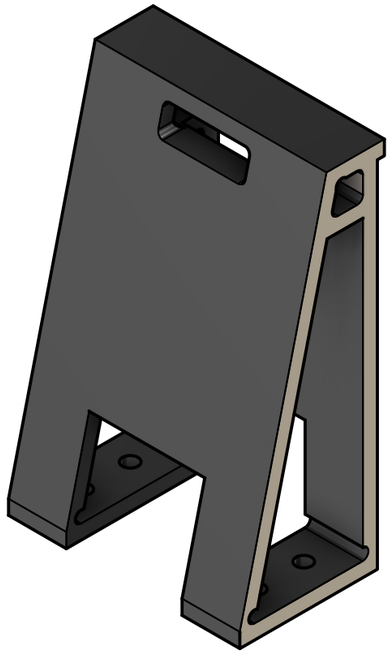

ALL WALL THICKNESSES ARE 5 mm
UNLESS OTHERWISE SPECIFIED

C-C (2:3)

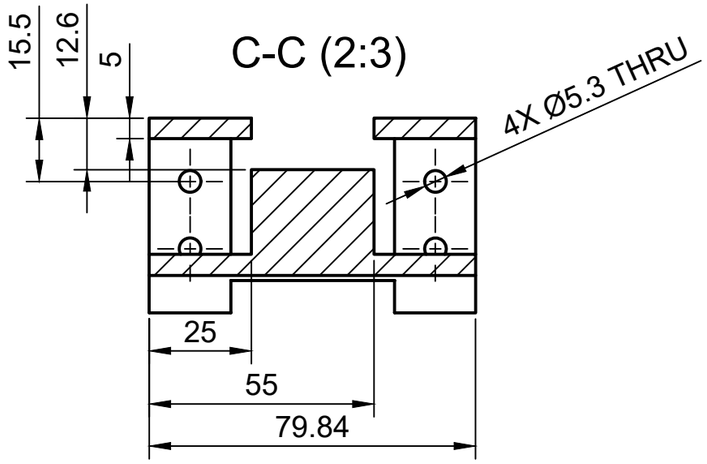

Department: UC DAVIS COLLEGE OF ENGINEERING		Part: Mount	
		Team: THE NOBLE AGGIE LABS	Rev.: 1
Sponsor: Sandia National Laboratories	UNLESS OTHERWISE SPECIFIED DIMENSIONS ARE IN MM TOLERANCES: X.X = ± 0.05 X.XX = ± 0.025 X.XXX = ± 0.01	DWG No.: M2	Material: Invar 36
		Scale: 2:3	Date of issue: 03/20/2026
			Sheet: 11/14

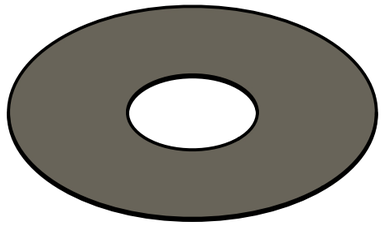

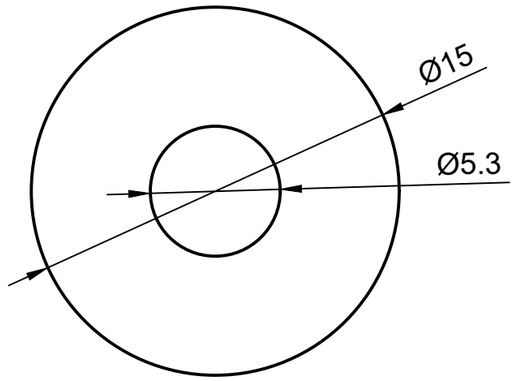

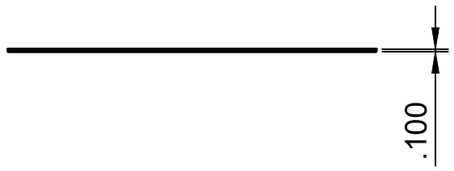

Department: UC DAVIS COLLEGE OF ENGINEERING		Part: Thick Shim Washer	
		Team: THE NOBLE AGGIE LABS	Rev.: 1
Sponsor: Sandia National Laboratories	UNLESS OTHERWISE SPECIFIED DIMENSIONS ARE IN MM TOLERANCES: X.X = ± 0.05 X.XX = ± 0.025 X.XXX = ± 0.01	DWG No.: M5	Material: 1075 Steel
		Scale: 4:1	Date of issue: 03/20/2026 / Sheet: 12/14

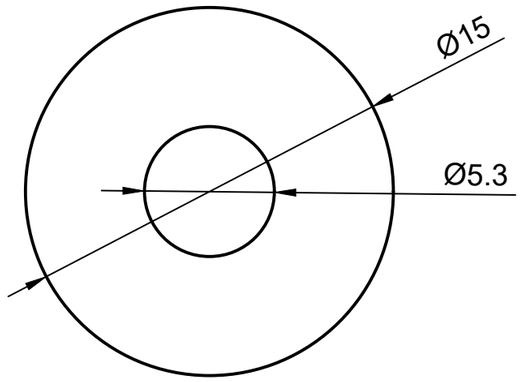

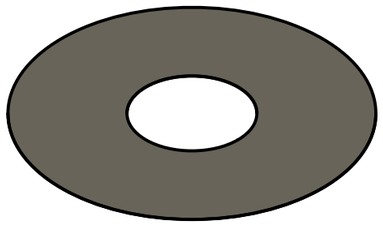

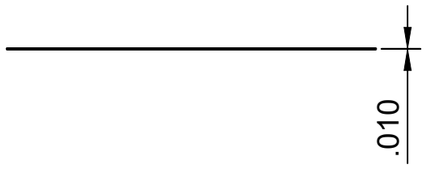

Department

UC DAVIS COLLEGE OF ENGINEERING

Part: Thin Shim Washer

Team: THE NOBLE AGGIE LABS

Rev.: 1

Sponsor: Sandia National Laboratories

UNLESS OTHERWISE SPECIFIED

DIMENSIONS ARE IN MM

TOLERANCES:
X.X = ± 0.05
X.XX = ± 0.025
X.XXX = ± 0.01

DWG No.: M6

Material: 1075 Steel

Scale: 4:1

Date of issue: 03/20/2026

Sheet: 13/14

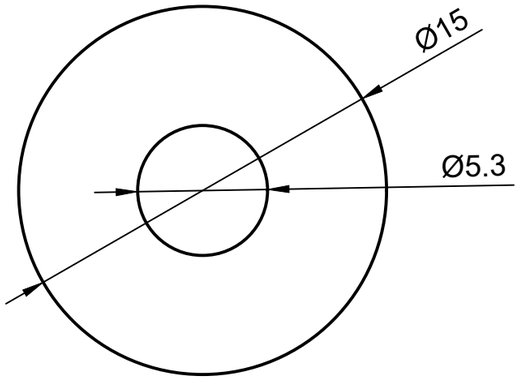

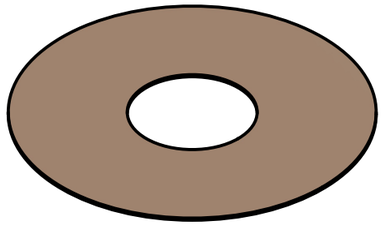

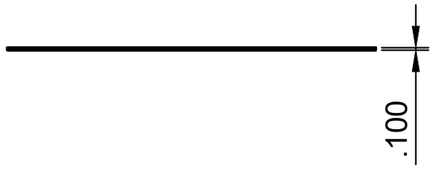

Department: UC DAVIS COLLEGE OF ENGINEERING	Part: Crush Washer		
	Team: THE NOBLE AGGIE LABS	Rev.: 1	
Sponsor: Sandia National Laboratories	UNLESS OTHERWISE SPECIFIED DIMENSIONS ARE IN MM TOLERANCES: X.X = ± 0.05 X.XX = ± 0.025 X.XXX = ± 0.01	DWG No.: M7	Material: Copper
		Scale: 4:1	Date of issue: 03/20/2026	Sheet: 14/14