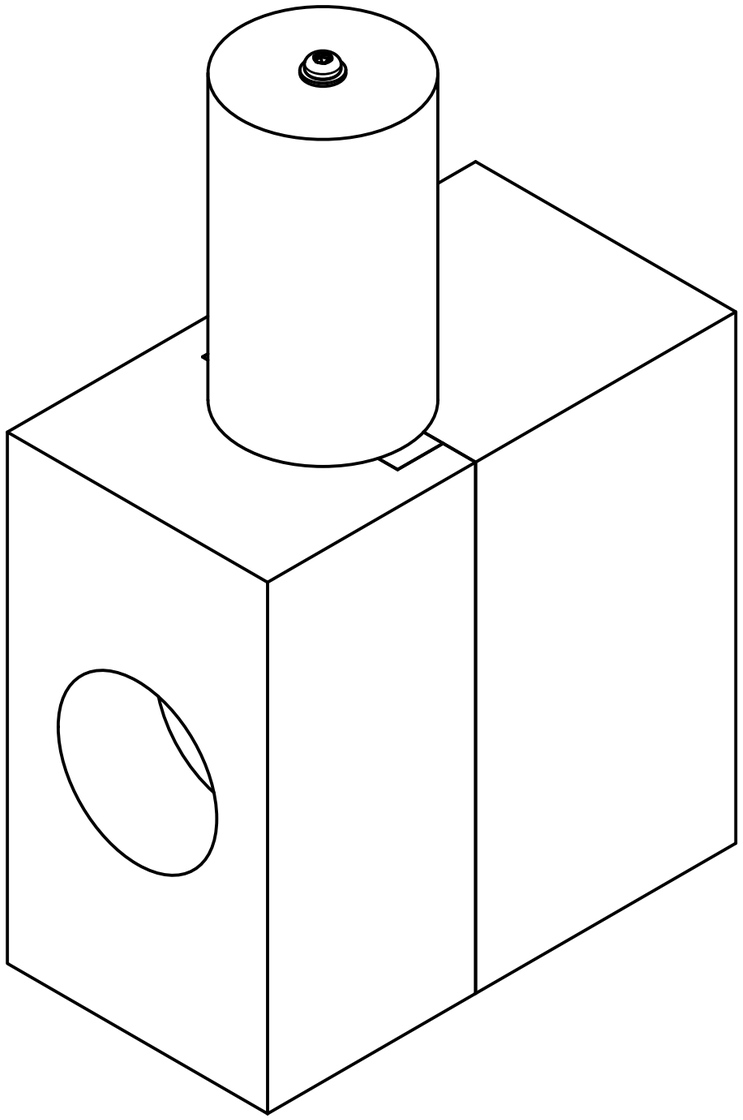

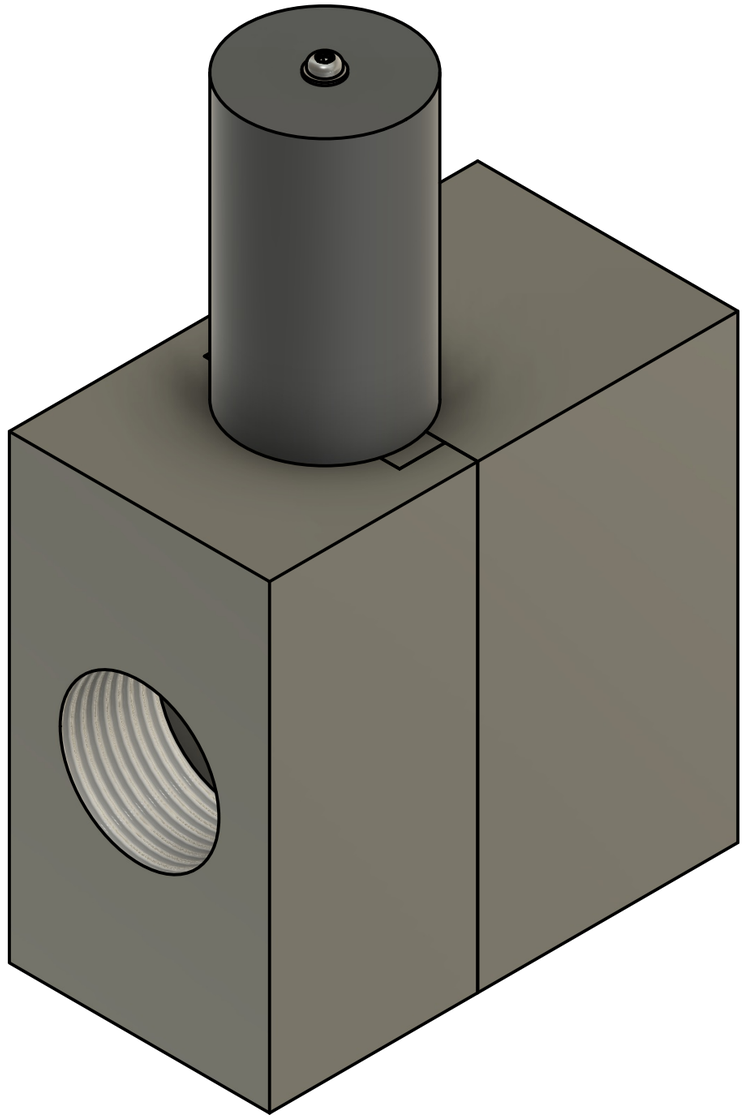

Department: UC DAVIS COLLEGE OF ENGINEERING		Part: COMPLETE ASSEMBLY	
		Team: NOBLE AGGIE LABS	Rev.: 2
Sponsor: Sandia National Laboratories	UNLESS OTHERWISE SPECIFIED DIMENSIONS ARE IN MM TOLERANCES: X.X = ± 0.2 X.XX = ± 0.02 X.XXX = ± 0.01	DWG No.: C0	Material:
		Scale: 3:2	Date of Issue: 5/12/2026
			Sheet: 1/6

Sub-Assembly Identification		
Item	Name	Number
1	Valve Sub-Assembly	V0
2	Actuator Sub-Assembly	A0

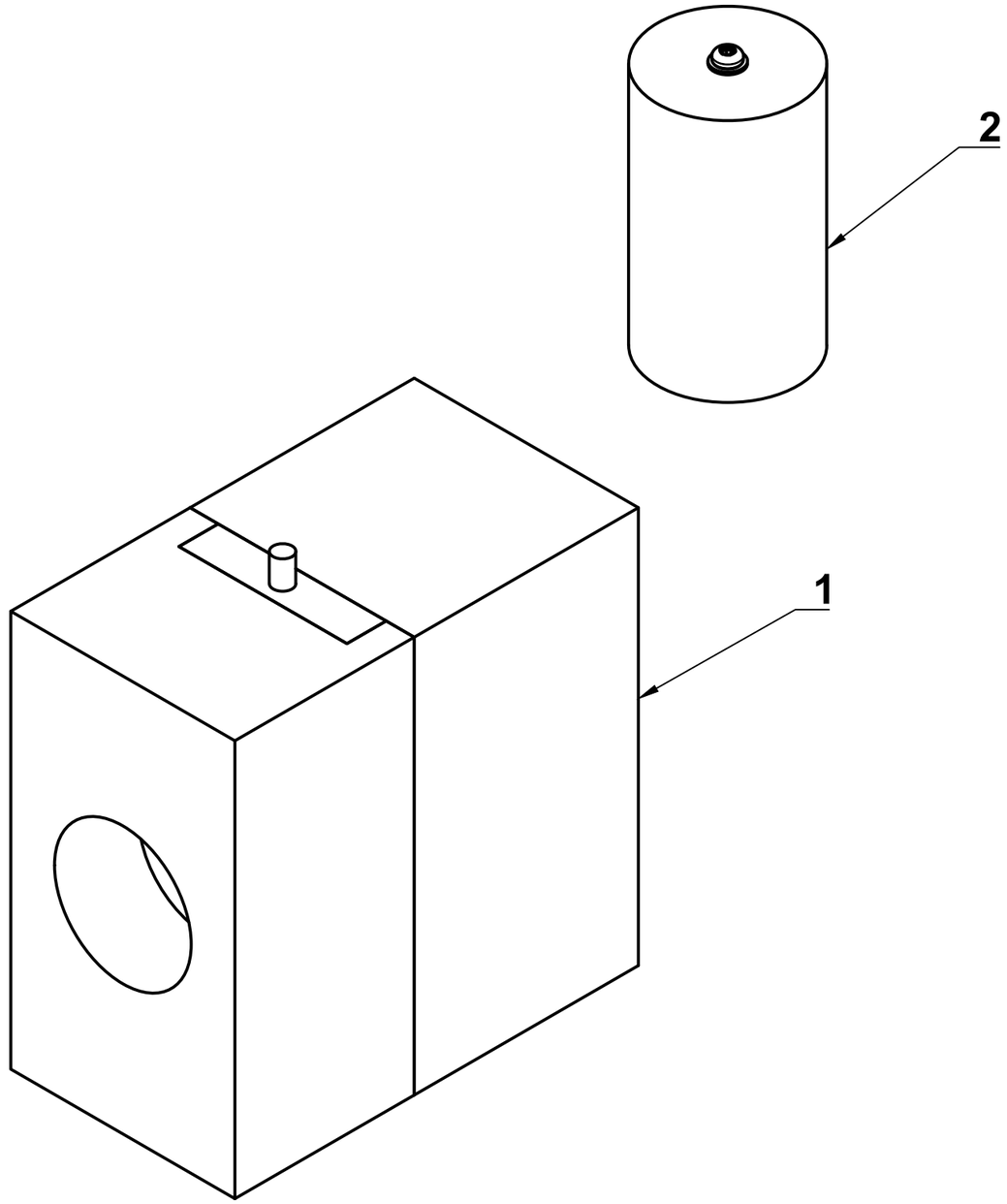

Department: UC DAVIS COLLEGE OF ENGINEERING

Part: SUB-ASSEMBLY IDENTIFICATION

Team: NOBLE AGGIE LABS

Rev.: 2

Sponsor: Sandia National Laboratories

UNLESS OTHERWISE SPECIFIED
DIMENSIONS ARE IN MM

TOLERANCES:
X.X = ± 0.2
X.XX = ± 0.02
X.XXX = ± 0.01

DWG No.: S0

Material:

Scale: 4:3

Date of Issue: 5/12/2026

Sheet: 2/6

Parts List				
Item	Qty	Part Name	Part Number	Material
1	1	Housing Inlet v6	V2	Invar 36
2	2	Housing Center v3	V1	Invar 36
3	1	Housing Outlet v4	V3	Invar 36
4	1	Valve Orifice v3	V4	Invar 36
5	2	Bellows v2	I718-159-72-430	Inconel 718

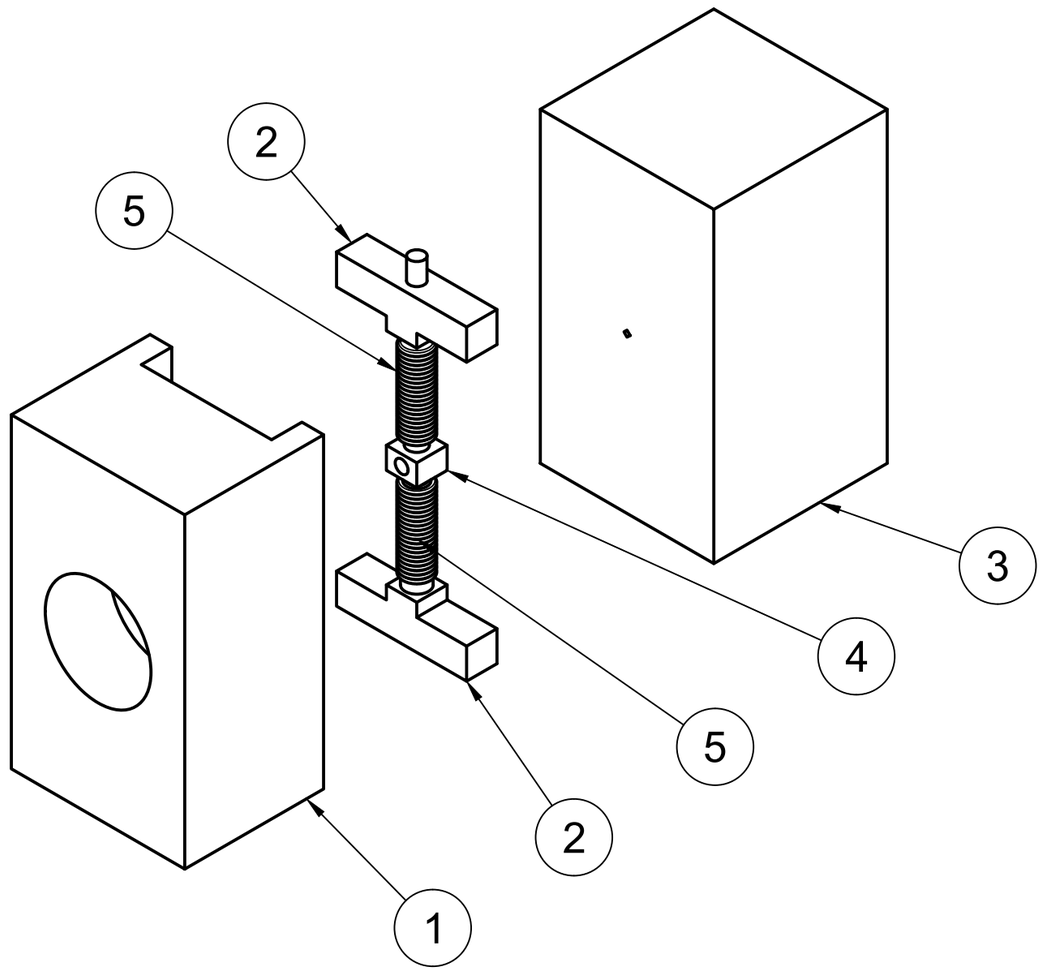

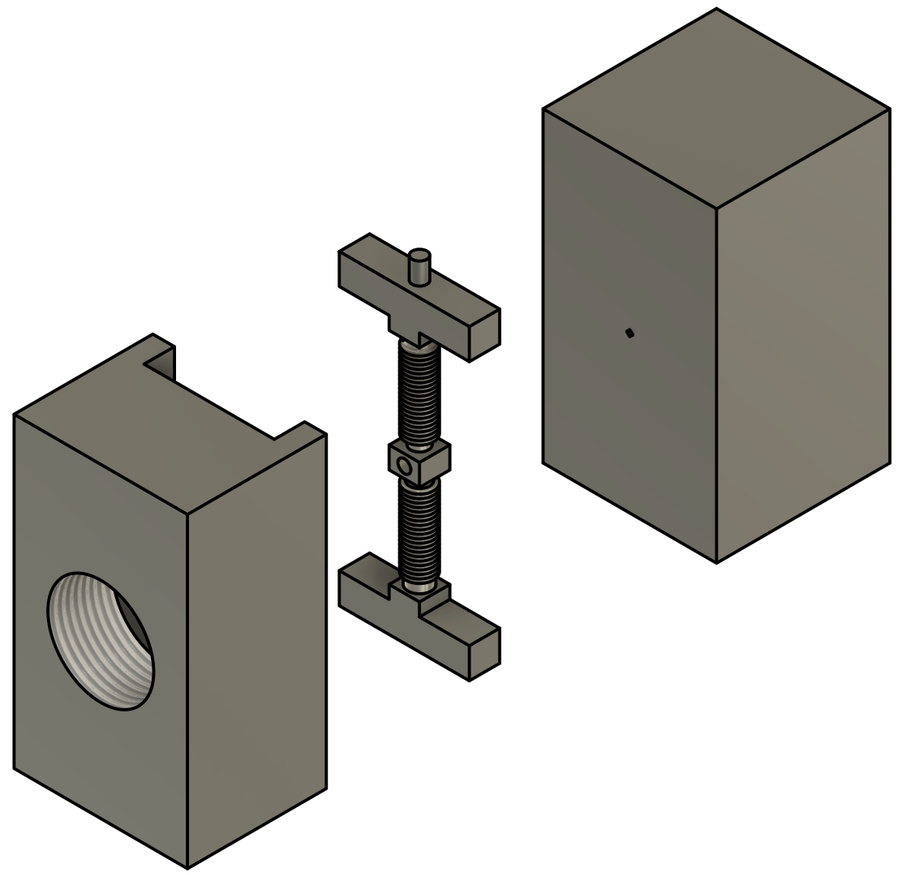

Department: UC DAVIS COLLEGE OF ENGINEERING

Part: VALVE SUB-ASSEMBLY

Team: NOBLE AGGIE LABS

Rev.: 2

Sponsor: Sandia National Laboratories

UNLESS OTHERWISE SPECIFIED
DIMENSIONS ARE IN MM

TOLERANCES:
X.X = ± 0.2
X.XX = ± 0.02
X.XXX = ± 0.01

DWG No.: V0

Material:

Scale: 1

Date of Issue: 5/12/2026

Sheet: 3/6

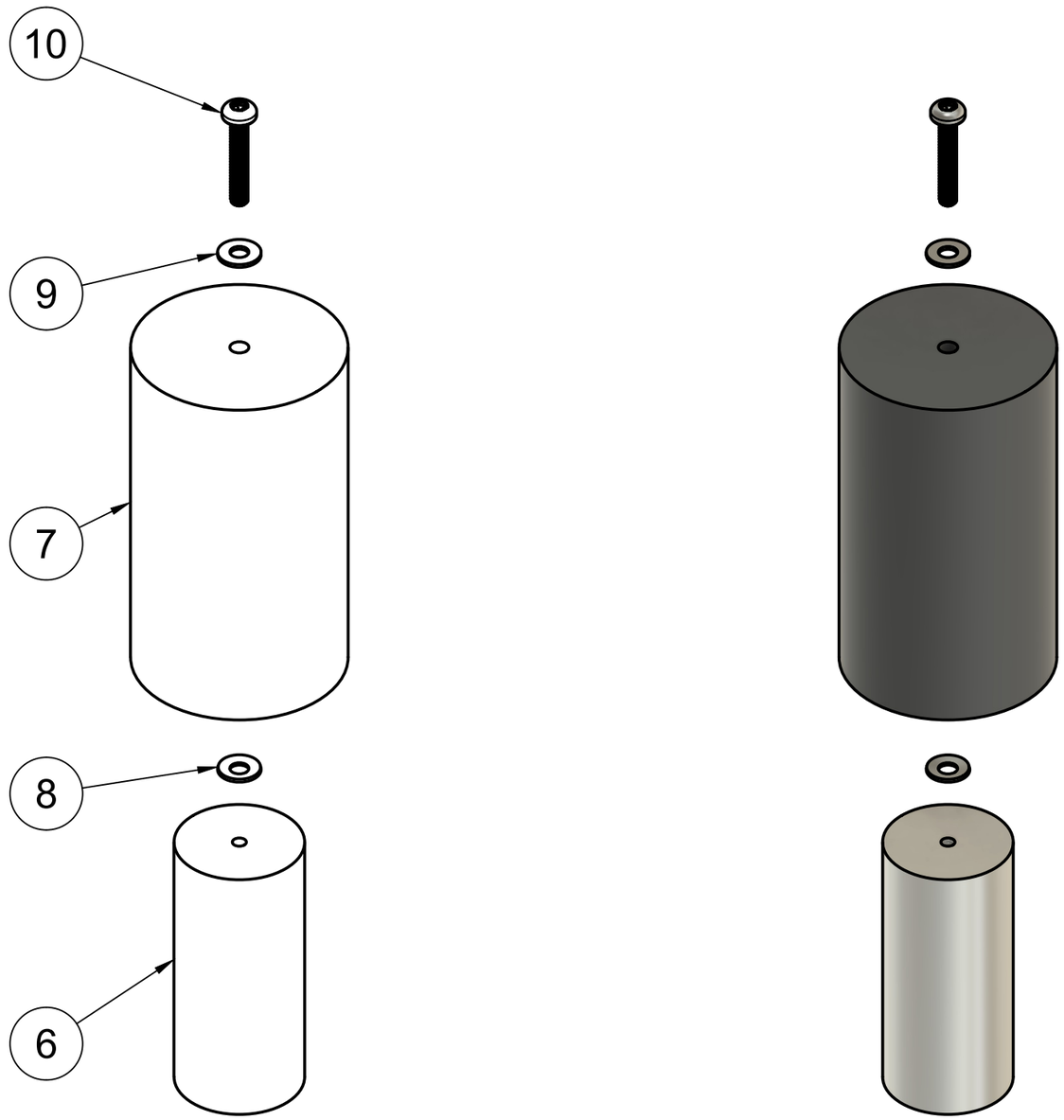

Parts List

Item	Qty	Part Name	Part Number	Material
6	1	Actuator v5	A1	Aluminum 6061
7	1	Mount v4	A2	Allvar
8	1	Belleville Washer v2	93237A101	Stainless Steel 316L
9	1	Standard Washer v3	93475A195	18-8 Stainless Steel
10	1	Screw v2	90362A141	18-8 Stainless Steel

Department: UC DAVIS COLLEGE OF ENGINEERING

Part: ACTUATOR SUB-ASSEMBLY

Team: NOBLE AGGIE LABS

Rev.: 2

Sponsor: Sandia National Laboratories

UNLESS OTHERWISE SPECIFIED
DIMENSIONS ARE IN MM
TOLERANCES:
X.X = ± 0.2
X.XX = ± 0.02
X.XXX = ± 0.01

DWG No.: A0

Material:

Scale: 3:2

Date of Issue: 5/12/2026

Sheet: 4/6

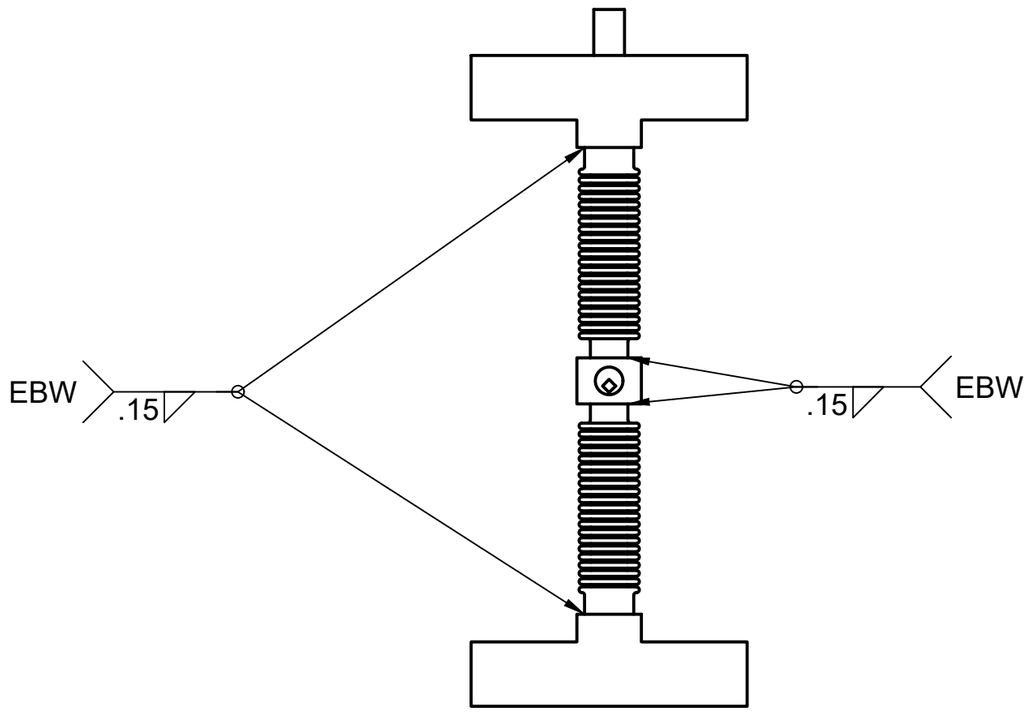

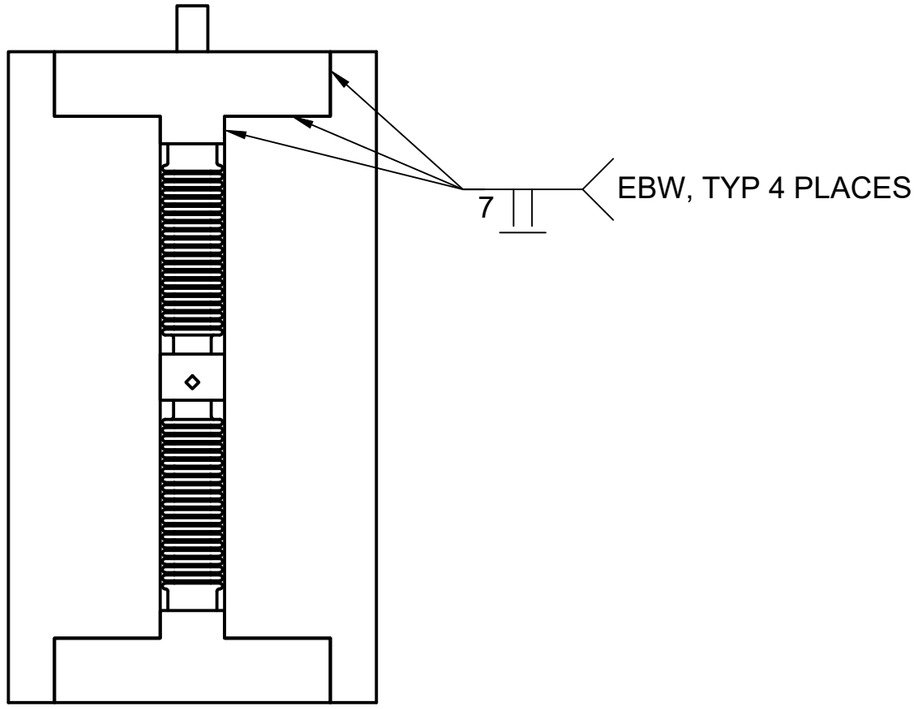

GENERAL NOTES:

1. WELDING PROCESS: ELECTRON BEAM WELDING (EBW).
2. NO FILLER METAL TO BE USED (AUTOGENOUS WELDING).
3. MATING SURFACES MUST BE INTIMATE. MAXIMUM GAP NOT TO EXCEED 0.01 MM.
4. SURFACES TO BE WELDED MUST BE CLEAN AND STRICTLY FREE OF OIL, GREASE, AND OXIDATION PRIOR TO WELDING.
5. PURGE INTERNAL CAVITIES WITH INERT GAS DURING WELDING TO PREVENT OXIDATION AND SPATTER.
6. ALL WETTED LBW JOINTS SHALL BE SUBJECT TO 100% RADIOGRAPHIC EXAMINATION (RT) TO ENSURE A WELD JOINT EFFICIENCY (E) OF 1.0.

Department: UC DAVIS COLLEGE OF ENGINEERING		Part: INTERNAL VALVE WELDMENTS	
		Team: NOBLE AGGIE LABS	Rev.: 2
Sponsor: Sandia National Laboratories	UNLESS OTHERWISE SPECIFIED DIMENSIONS ARE IN MM TOLERANCES: X.X = ± 0.2 X.XX = ± 0.02 X.XXX = ± 0.01	DWG No.: W1	Material:
		Scale: 3:2	Date of Issue: 5/12/2026
			Sheet: 5/6

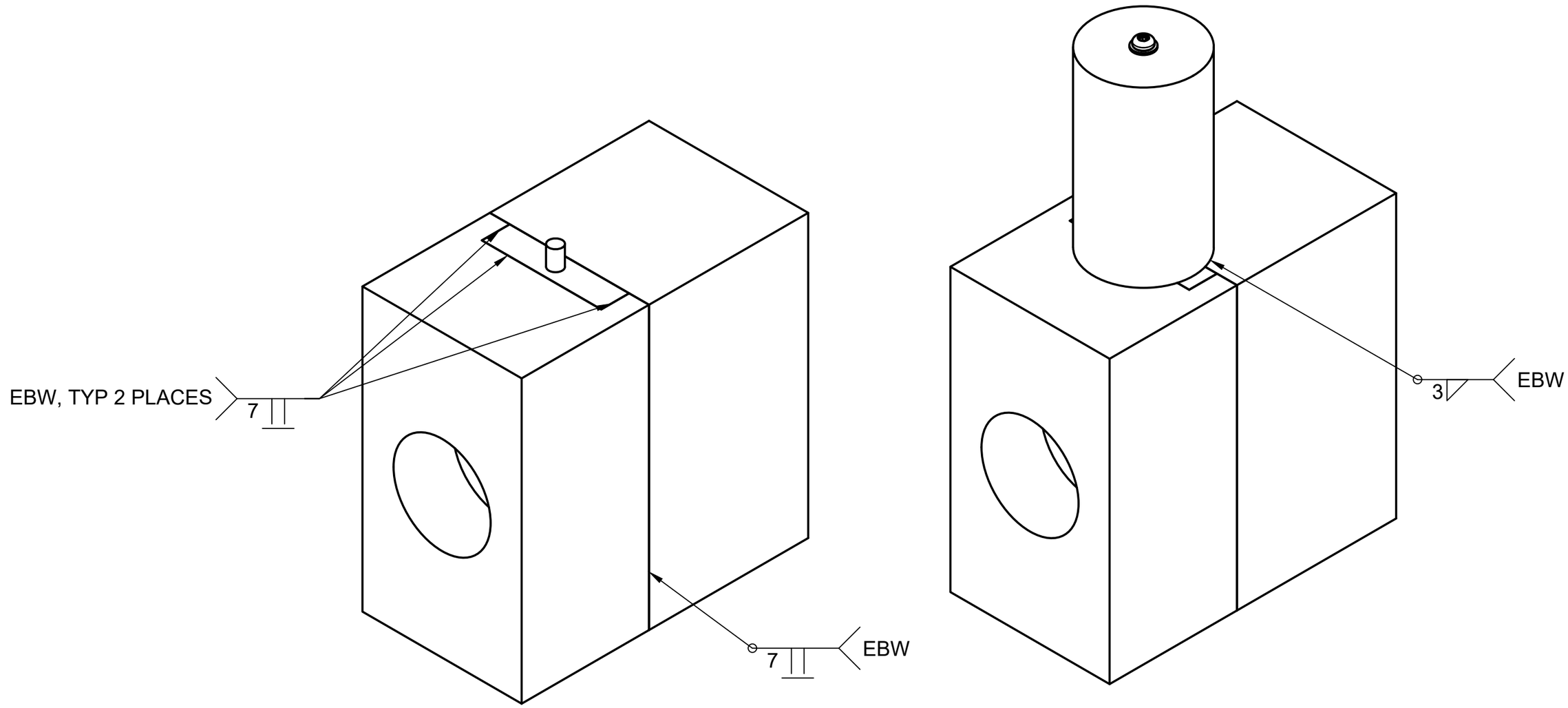

GENERAL NOTES:

1. WELDING PROCESS: ELECTRON BEAM WELDING (EBW).
2. NO FILLER METAL TO BE USED (AUTOGENOUS WELDING).
3. MATING SURFACES MUST BE INTIMATE. MAXIMUM GAP NOT TO EXCEED 0.01 MM.
4. SURFACES TO BE WELDED MUST BE CLEAN AND STRICTLY FREE OF OIL, GREASE, AND OXIDATION PRIOR TO WELDING.
5. PURGE INTERNAL CAVITIES WITH INERT GAS DURING WELDING TO PREVENT OXIDATION AND SPATTER.
6. ALL WETTED LBW JOINTS SHALL BE SUBJECT TO 100% RADIOGRAPHIC EXAMINATION (RT) TO ENSURE A WELD JOINT EFFICIENCY (E) OF 1.0.

Department: UCDAVIS COLLEGE OF ENGINEERING		Part: EXTERNAL VALVE WELDMENTS	
		Team: NOBLE AGGIE LABS	Rev.: 2
Sponsor: Sandia National Laboratories	UNLESS OTHERWISE SPECIFIED DIMENSIONS ARE IN MM TOLERANCES: X.X = ± 0.2 X.XX = ± 0.02 X.XXX = ± 0.01	DWG No.: W2	Material:
		Scale: 4:3	Date of Issue: 5/12/2026
			Sheet: 6/6