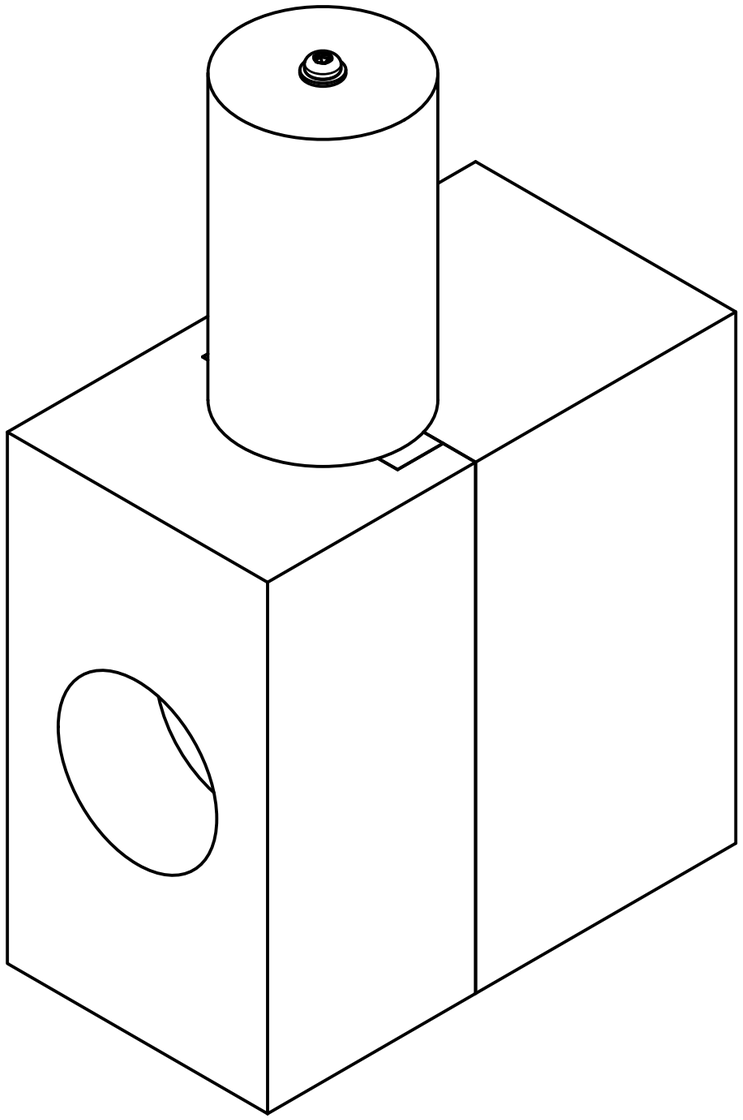

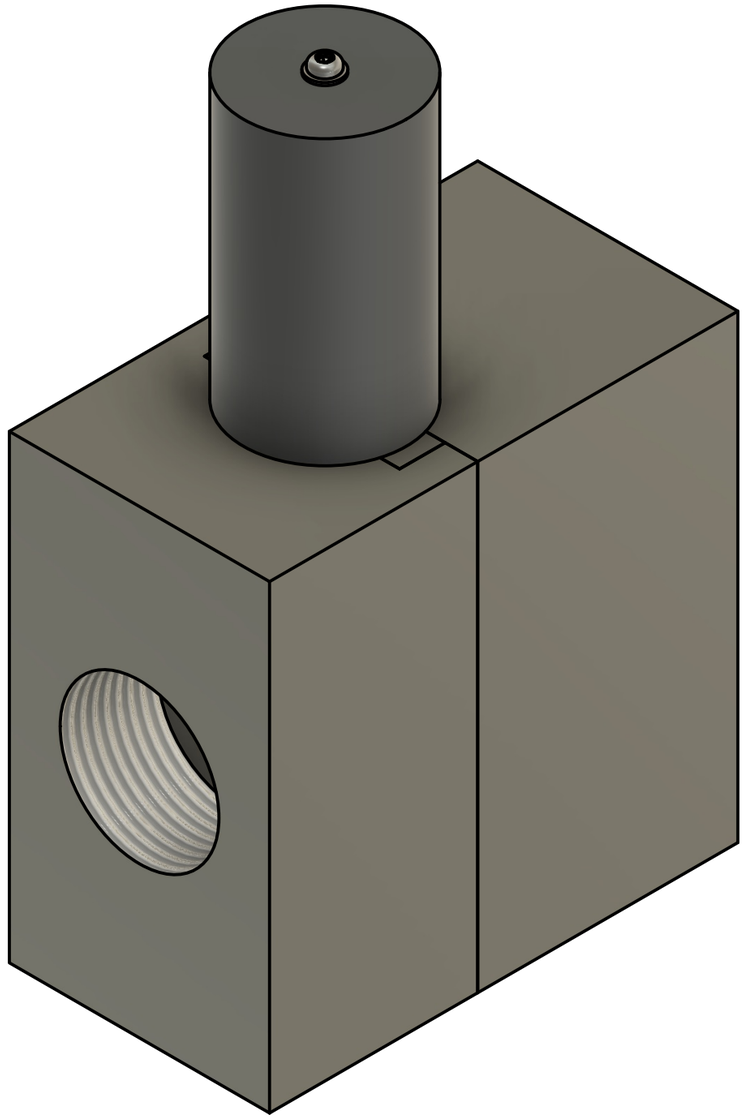

Department: UC DAVIS COLLEGE OF ENGINEERING		Part: COMPLETE ASSEMBLY	
		Team: NOBLE AGGIE LABS	Rev.: 2
Sponsor: Sandia National Laboratories	UNLESS OTHERWISE SPECIFIED DIMENSIONS ARE IN MM TOLERANCES: X.X = ± 0.2 X.XX = ± 0.02 X.XXX = ± 0.01	DWG No.: C0	Material:
		Scale: 3:2	Date of Issue: 5/11/2026
			Sheet: 1/13

Parts List				
Item	Qty	Part Name	Part Number	Material
1	1	Housing Inlet v6	V2	Invar 36
2	2	Housing Center v3	V1	Invar 36
3	1	Housing Outlet v4	V3	Invar 36
4	1	Valve Orifice v3	V4	Invar 36
5	2	Bellows v2	I718-159-72-430	Inconel 718

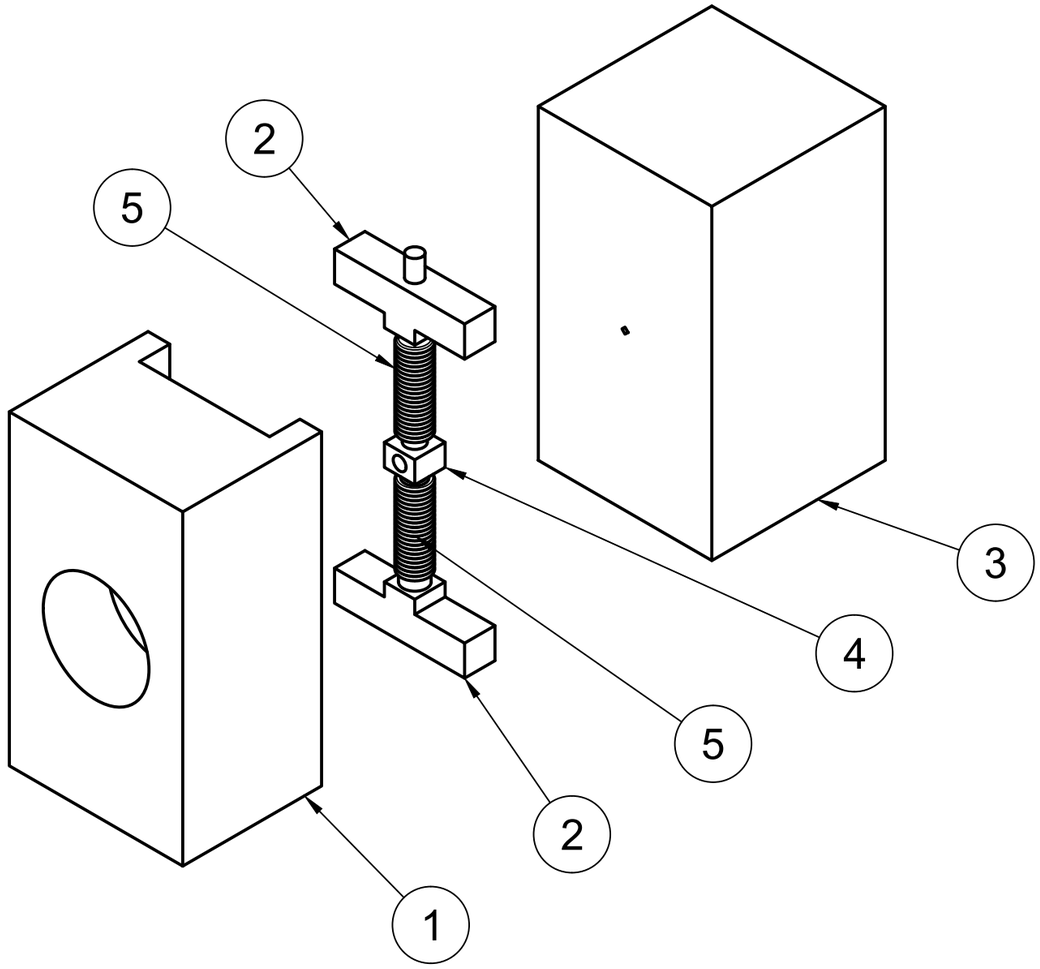

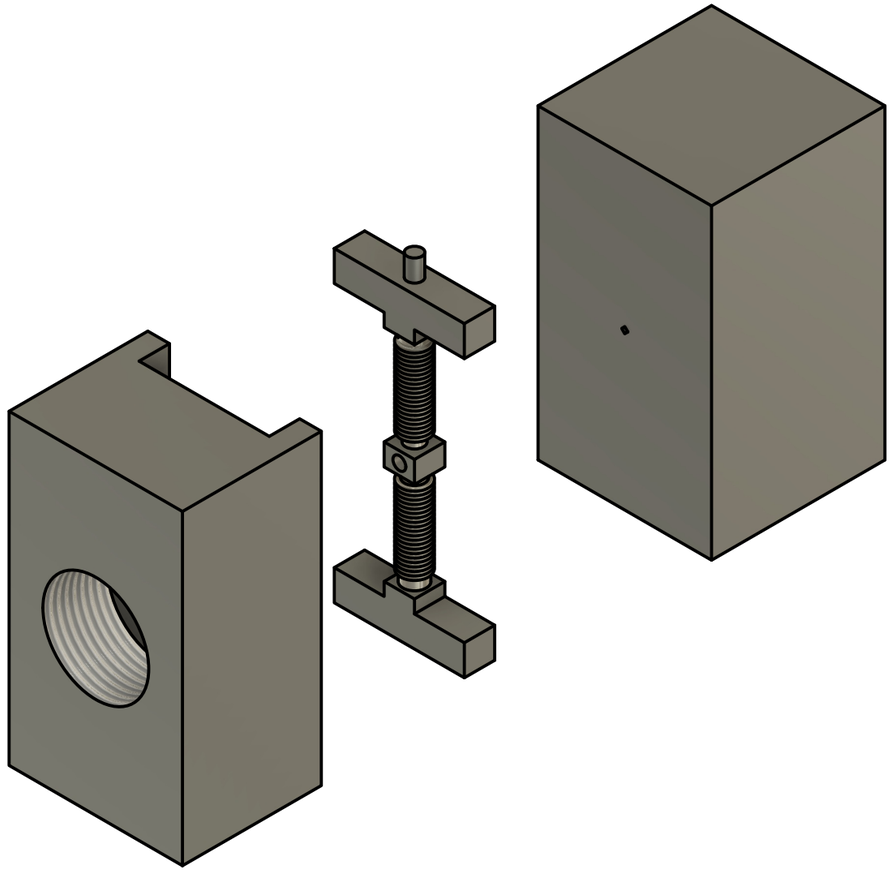

Department: UC DAVIS COLLEGE OF ENGINEERING

Part: VALVE SUB-ASSEMBLY

Team: NOBLE AGGIE LABS

Rev.: 2

Sponsor: Sandia National Laboratories

UNLESS OTHERWISE SPECIFIED
DIMENSIONS ARE IN MM

TOLERANCES:
X.X = ± 0.2
X.XX = ± 0.02
X.XXX = ± 0.01

DWG No.: V0

Material:

Scale: 1:1

Date of Issue: 5/11/2026

Sheet: 3/13

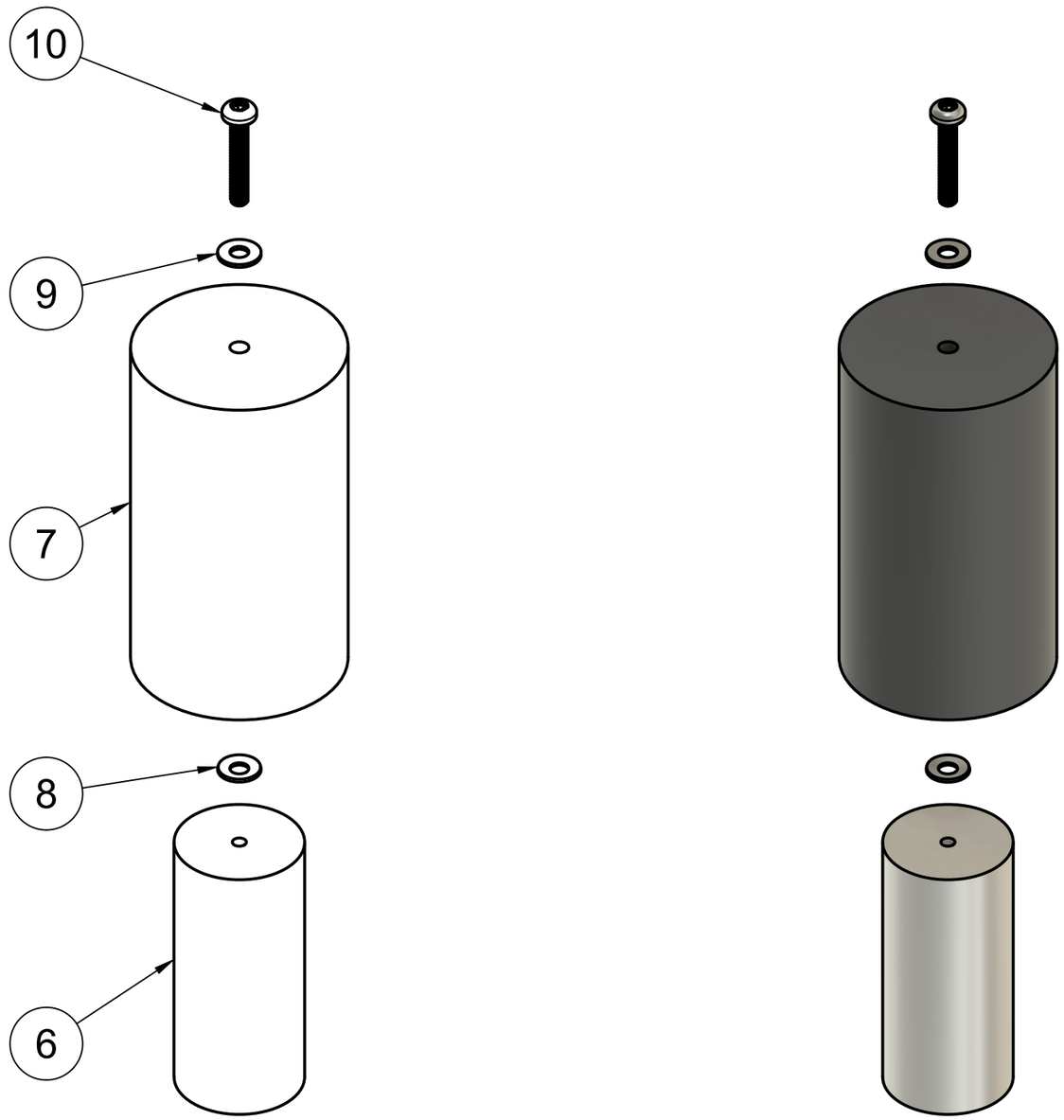

Parts List

Item	Qty	Part Name	Part Number	Material
6	1	Actuator v5	A1	Aluminum 6061
7	1	Mount v4	A2	Allvar
8	1	Belleville Washer v2	93237A101	Stainless Steel 316L
9	1	Standard Washer v3	93475A195	18-8 Stainless Steel
10	1	Screw v2	90362A141	18-8 Stainless Steel

Department: UC DAVIS COLLEGE OF ENGINEERING

Part: ACTUATOR SUB-ASSEMBLY

Team: NOBLE AGGIE LABS

Rev.: 2

Sponsor: Sandia National Laboratories

UNLESS OTHERWISE SPECIFIED
DIMENSIONS ARE IN MM
TOLERANCES:
X.X = ± 0.2
X.XX = ± 0.02
X.XXX = ± 0.01

DWG No.: A0

Material:

Scale: 3:2

Date of Issue: 5/11/2026

Sheet: 8/13