[Sandia National Laboratories Aerial Photograph]

Place `cover_photo.jpg` in the same folder
and uncomment the includegraphics line above.

UC DAVIS

College of Engineering

Passive Temperature Compensation Device

SPONSORED BY: DR. BRADLEY BON, SANDIA NATIONAL LABORATORIES

PRELIMINARY MACHINE ARCHITECTURE REPORT

EME 185

PROFESSOR JONATHAN SCHOFIELD

XIANGPU WANG, TEACHING ASSISTANT

SUBMISSION DEADLINE: 16 MARCH 2026

Team 16

Isaiah Mathew

Jon Pizarro

Nicholas Metta

John Bodine

Miguel Cuaycong

Sam van der Veen

Passive Temperature Compensation Device

By the

Noble Aggie Labs

Sponsored by Dr. Bradley Bon, Sandia National Laboratories

Preliminary Machine Architecture Report

EME 185

Professor Jonathan Schofield

TA Xiangpu Wang

Due 16 March 2026

Contents

1 Abstract **6**

2 System Architecture Selected **7**

2.1 Selection criteria 8

3 Discussion **10**

3.1 Valve 10

3.1.1 Design Requirement Updates(Roll-down) 11

3.1.2 Proof 11

3.2 Actuator 16

3.2.1 Design Requirement Updates(Roll-down) 16

3.2.2 Proof 16

3.3 Interface 17

3.3.1 Design Requirement Updates(Roll-down) 18

3.3.2 Proof 18

4 Preliminary Bill of Materials **19**

5 Project Management Information **21**

5.1 Updated Task List 21

5.2 Gantt Chart 21

5.3 Critical Path Method (CPM) Analysis 22

6 Cited References **24**

Appendices **26**

.1 Updated Design Requirements 27

.2 Concept Screening and Scoring Matrices 27

.3 Engineering Drawing Package 27

.4 Product Data Sheets and Price Quotes 27

.5 Detailed Calculations 27

List of Figures

2.1 Controls diagram of the PTCD. Outlines the overall flow of inputs and outputs across the subsystems. 7
2.2 Exploded View 7

3.1 CAD model of the orifice 11
3.2 CAD model of the bellow 12

5.1 Updated Gantt chart spanning Winter and Spring quarters. The vertical dashed line indicates the current date. 22
5.2 Critical path method (CPM) network diagram. The critical path is highlighted in red. 23

List of Tables

2.1 Overall requirements and specifications summary 8

3.1 Valve Specifications 10
3.2 Valve Specifications 11
3.3 PLACEHOLDER Actuator Specifications 16
3.4 PLACEHOLDER Interface Specifications 17

4.1 Preliminary Bill of Materials and Cost Estimate 19

5.1 Updated task list for Winter and Spring quarters. 21

Abstract

Sandia National Laboratories (SNL) has tasked our senior design team, Noble Aggie Labs to design a passive temperature compensation device (PTCD) that regulates flow in a pipe. Flow must be regulated by adjusting an orifice geometry according to a change in ambient air temperature. The PTCD must be purely thermo-mechanically driven, functioning without the reliance on embedded systems(electronics) or human input. The required mathematical relationship between the ambient temperature and a characteristic orifice geometry is provided by SNL. Additionally, materials compatibility with the fluid –primarily noble gases– must be considered. In order to meet these requirements, the PTCD will be divided into three main subsystems: (1) Actuator, (2) Interface, (3) Valve Mechanism.

This Preliminary Machine Architecture Report outlines how well the current iteration of the three main subsystems conform to the specified mathematical relationship. Explicitly, the relationship between the orifice diameter and the ambient temperature can be summarized as $D_{\text{effective}} = A_1(T_{\text{ambient}} - T_{\text{reference}}) + A_0$ which will be referred to as the "required relationship" throughout this report. The PTCD and its constituent subsystems must facilitate this linear relationship between the characteristic orifice diameter and the ambient temperature. **[TODO: Talk about sealing(bellows)]**

System Architecture Selected

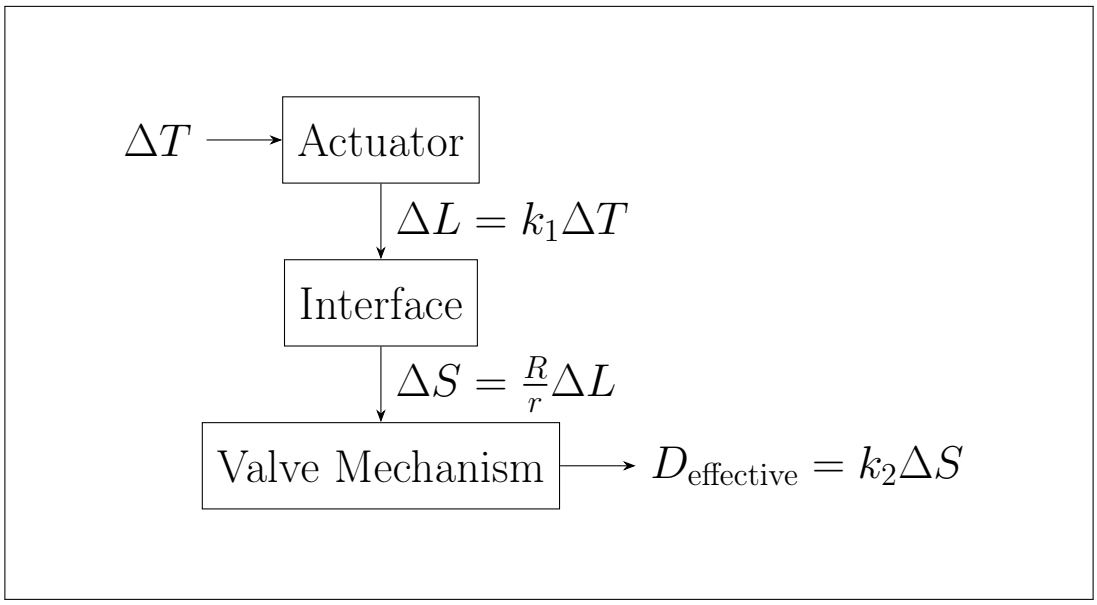

Figure 2.1: *Controls diagram of the PTCD. Outlines the overall flow of inputs and outputs across the subsystems.*

Figure 2.2: *Exploded View*

Table 2.1: *Overall requirements and specifications summary*

Requirements	Spec	Subsystem Rolldown
Temp. range	-60°C to 80°C	Actuator
Mech. envelope	$\leq$ 10 cm^3	Entire device
Pressure	$\Delta P \leq 68.95$ MPa	Valve Mechanism
Eff. diameter	$D_{\text{eff}} = 0.170$–0.384 mm	Valve Mechanism
Tolerance	$D_{\text{eff}} = \pm 0.0127$ mm	Entire device
Fluid compatibility	"High" free energy of reaction with noble gas	Valve Mechanism
Sealing/Fluid diffusion	TODO: Quantify seal quality somehow	Valve Mechanism and Interface

2.1 Selection criteria

[TODO: Clean up the following paragraphs or move to discussion] The relationship between the ambient temperature and its corresponding orifice geometry is governed by the following equation:

$$D_{\text{effective}} = A_1(T_{\text{ambient}} - T_{\text{reference}}) + A_0 \tag{2.1}$$

Where:

$$\begin{aligned} A_1 &= -1.524(10)^{-3} \pm 5\% \ \frac{\text{mm}}{°C} \\ A_0 &= 0.254 \pm 5\% \text{ mm} \\ T_{\text{ref}} &= 25°C \\ T_{ambient} &\ \epsilon\ [-60, 80]°C \end{aligned}$$

(1) a **aluminum thermal expansion rod** a singular metallic rod that responds to ambient temperature changes. The aluminum rod will have linear piston displacement as a result of thermal exapnsion via the following equation:

$$\Delta L = L_0 \, \Delta T \, \alpha \tag{2.2}$$

(2) A **compound spur-gear train** comprising of two rack gears and two coaxial pinion

gears with a gear ratio of 4:1. This amplifies and transmits the piston's linear motion to the valve; and (3) a **sliding-plate orifice valve** ("pizza cutter" design), in which two flat plates, one fixed and one translating contain a shaped hole with the overlap between the two holes defining the effective flow orifice. As the actuator extends with increasing temperature, the moving plate translates downwards. This reduces the overlap area and shriking D_{eff} per the requirements.

Discussion

3.1 Valve

Table 3.1: *Valve Specifications*

Requirements	**Specification**	**Subsystem Specification**
Mech. envelope	≤ 10 cm^3	TODO: Insert volume of mechanism
Pressure	$\Delta P \leq 68.95$ MPa	TODO: Insert FOS or necessary par.
Eff. diameter	$D_{\text{eff}} = 0.170$–0.384 mm	TODO: Insert orifice geometry
Tolerance	$D_{\text{eff}} = \pm 0.0127$ mm	TODO: Insert orifice geometry
Fluid compatibility	"High" free energy of reaction with noble gas	TODO: Insert material prop.
Sealing/Fluid diffusion	TODO: Quantify seal quality somehow	TODO: Insert corresponding spec

3.1.1 Design Requirement Updates(Roll-down)

3.1.2 Proof

Orifice

Figure 3.1: *CAD model of the orifice*

Table 3.2: *Valve Specifications*

Requirements	Specification	Subsystem Specification
Mech. envelope	≤ 10 cm^3	TODO: Insert volume of mechanism
Pressure	$\Delta P \leq 68.95$ MPa	TODO: Insert FOS or necessary par.
Eff. diameter	$D_{\text{eff}} = 0.170$–0.384 mm	TODO: Insert orifice geometry
Tolerance	$D_{\text{eff}} = \pm 0.0127$ mm	TODO: Insert orifice geometry
Fluid compatibility	"High" free energy of reaction with noble gas	TODO: Insert material prop.

The orifice is the critical piece of this design. In order to follow the relationship required by Equation 1, the orifice geometry must drive the rest of the design. Each plate, one fixed and one whose movement is controlled by the actuator, will contain identical rectangular holes near its center. The plates must maintain surface contact such that the overlap between the two holes creates the desired orifice. As the ambient temperature rises, the actuator

expands, lowering the moving plate. Because its hole is below that of the fixed plate, the resulting orifice shrinks.

Sealing

Figure 3.2: *CAD model of the bellow*

The welded metal bellows transmits an axial stroke δ from an external actuator into a high-pressure hydrogen valve while maintaining zero leakage. The bellows must withstand internal pressure P, provide the required displacement without plastic deformation, and minimize actuator force demand.

Design constraints:

- Withstand maximum internal pressure
- Operate within allowable compression limits
- Maintain acceptable spring force relative to actuator capability
- Minimize pressure-induced axial force via geometry

Design parameters:

- $P = 10{,}000$ psi (maximum internal pressure)
- $\delta = 0.01053$ in (required stroke)

INSERT BELLOWS IMAGE HERE

Figure XXX, above, illustrates the valve assembly with the bellows highlighted. Two bellows are used in the design to negate the pressure-induced force, allowing the actuator to focus solely on overcoming spring force and friction. They are welded to the valve body and the valve stem, ensuring a leak-tight seal while allowing for the necessary axial movement. Both bellows are designed to be identical, so the calculations below apply to each bellows independently. The following equations consider important design parameters and constraints for selecting the appropriate bellows geometry and material.

Effective area:

$$A = \pi \left(\frac{D_o + D_i}{4} \right)^2$$

Where D_o is the outside convolution diameter and D_i is the inside convolution diameter of the bellows. The effective area determines the axial force generated by internal pressure. Therefore, minimizing A reduces actuator force demand.

Pressure-induced force:

$$F_P = PA$$

Let K be the spring rate of the bellows, which depends on material properties, geometry, and convolution count N. The spring force is proportional to deflection δ.

Spring force:

$$F_s = K\delta$$

Total force required for actuation:

$$F_{total} = PA - PA + 2K\delta + F_{friction} \pm mg$$

It should be noted that δ is very small, so the spring force contribution is minimal compared to the pressure force. The two identical and opposing bellows cancel out the pressure-induced force. $F_{friction}$ accounts for any additional forces due to friction in the system, which should be minimized through design and material selection. The term mg accounts for gravitational forces acting on the valve stem.

Let N be the number of convolutions, D_{max} be the maximum axial displacement of the bellows, L be the convolution free length, and D_c be the axial displacement per convolution.

The total deflection must be less than the maximum allowed to prevent plastic deformation.

$$\delta < D_{max}$$

Displacement per convolution:

$$D_c = \frac{D_{max}}{N}$$

Increasing N lowers spring rate and increases stroke capacity. Decreasing N increases stiffness and squirm resistance. In this application, δ is small, so the spring rate is chosen to be low enough to allow for the required stroke while maintaining structural integrity.

When welded metal bellows are subjected to internal pressure, the pressure acts over an effective cross-sectional area and generates a net axial force. This pressure-induced force is independent of stroke and depends solely on system pressure and bellows geometry. In high-pressure hydrogen applications, this force typically dominates the actuator load requirement and therefore becomes a primary design driver.

The pressure required to compress the bellows any distance within its elastic range is given by:

$$P = \frac{K\delta}{A}$$

The maximum operating pressure of the bellows is considered the proof pressure, which is the pressure at which the bellows can be compressed to the required stroke without yielding. Critical squirm pressure is the pressure at which the bellows becomes unstable and experiences lateral deformation. This occurs when the bellows are unrestrained from sideways movement and the internal pressure exceeds the bellows' ability to maintain its shape.

Burst Pressure is the maximum pressure the bellows can withstand while restrained from lateral movement. For this application, the bellows will be restrained from lateral movement by the valve body, so critical squirm pressure is not a primary concern. Therefore, the design is governed by the following relationship:

$$P_{operating} < P_{burst}$$

Where P_{burst} is the maximum pressure the bellows can withstand without failure.

The equations above govern the selection process for the bellows parameters and define the acceptable diameter, wall thickness, convolution count, and material. The parameters

of the selected bellows are as follows:

- Do: in (outside convolution diameter)
- Di:in (inside convolution diameter)
- t:in (wall thickness)
- L:in (convolution free length)
- Pburst:psi (burst pressure)
- N:(number of convolutions)
- Material:(chosen for its strength and compatibility with hydrogen)

Justification for the selected parameters is based on the formulas above which yield the required stroke, spring force, and pressure resistance. The selected bellows meet the design constraints while minimizing actuator force demand and ensuring reliable operation under the specified conditions.

[TODO: Discuss how requirements changed since Report 1. For example:

- **Did discussions with Dr. Bradley Bon reveal new constraints?**
- **Did preliminary calculations show any requirements were infeasible or needed adjustment?**
- **Were any requirements added, removed, or modified?**

Reference the updated requirements table in Appendix .1.]

3.2 Actuator

Table 3.3: *PLACEHOLDER Actuator Specifications*

Requirements	Specification	Subsystem Specification
Mech. envelope	≤ 10 cm^3	TODO: Insert volume of mechanism
Pressure	$\Delta P \leq 68.95$ MPa	TODO: Insert FOS or necessary par.
Eff. diameter	$D_{\text{eff}} = 0.170$–0.384 mm	TODO: Insert orifice geometry
Tolerance	$D_{\text{eff}} = \pm 0.0127$ mm	TODO: Insert orifice geometry
Fluid compatibility	"High" free energy of reaction with noble gas	TODO: Insert material prop.
Sealing/Fluid diffusion	TODO: Quantify seal quality somehow	TODO: Insert corresponding spec

3.2.1 Design Requirement Updates(Roll-down)

3.2.2 Proof

[TODO: Show that the actuator produces sufficient displacement over the temperature range to fully open/close the valve.]

[TODO: Replace this example with your actual thermal expansion calculation.]

The linear thermal expansion of a rod is given by:

$$\Delta L = \alpha \cdot L_0 \cdot \Delta T \tag{3.1}$$

where:

- ΔL is the change in length [mm],
- α is the coefficient of thermal expansion [°C^{-1}],
- L_0 is the original length [mm],
- ΔT is the temperature change [°C].

  Assumptions:

  1. **[TODO: Material properties are constant over the temperature range.]**

2. **[TODO: Thermal equilibrium is reached before the test window.]**
3. **[TODO: List all assumptions.]**

[TODO: Substitute your values into Equation 3.1 and show the result. Compare the result to the requirement.]

Force Analysis Under Pressure Loading

[TODO: Show that the actuator can generate enough force to move the valve against the pressure differential. Consider worst case: 10 000 psid.]

Paramter values:

- $E =$
- $A =$
- $\alpha =$
- $\Delta T =$

$$F = EA\alpha\Delta T \tag{3.2}$$

[TODO: Insert your actual force pressure calculations here.]

3.3 Interface

Table 3.4: *PLACEHOLDER Interface Specifications*

Requirements	Specification	Subsystem Specification
Mech. envelope	≤ 10 cm^3	TODO: Insert volume of mechanism
Pressure	$\Delta P \leq 68.95$ MPa	TODO: Insert FOS or necessary par.
Eff. diameter	$D_{\text{eff}} = 0.170$–0.384 mm	TODO: Insert orifice geometry
Tolerance	$D_{\text{eff}} = \pm 0.0127$ mm	TODO: Insert orifice geometry
Fluid compatibility	"High" free energy of reaction with noble gas	TODO: Insert material prop.
Sealing/Fluid diffusion	TODO: Quantify seal quality somehow	TODO: Insert corresponding spec

3.3.1 Design Requirement Updates(Roll-down)

3.3.2 Proof

An interface must be made to transfer motion from the actuator to the valve shaft. As noted in the actuator section (make sure this is mentioned) actuation distance increases with actuator base length L_o (can reference equation used in prior section or appendix), but the actuator size is limited by the mechanical envelope as mentioned before and it has been determined that to meet actuation needs without an amplifying interface the actuator would need to be of length $L_o =$ (insert from JBs calcs). This puts our system outside of the mechanical envelope (or close to it, check with JB) and necessitates an amplifying transmission. We chose rack and pinion compound gear train as this translates linear actuator movement to rotational, amplifies it using a [1:2] compound gear set, then translates back to linear movement with a second rack attached to the valve piston. Note that any error is also propagated through the train facilitating another reason to maximize actuator length and minimize need for large gear ratios. To decide on train specifications an optimization study was done to find a gear ratio that allowed for maximum precision and delivered necessary movement from the actuator to the valve.

Preliminary Bill of Materials

[TODO: Write a brief introductory paragraph explaining the BOM structure and the total estimated project cost.]

Table 4.1: *Preliminary Bill of Materials and Cost Estimate*

Item	Part Name	Description / Supplier	Qty	Material	P/
Actuator Subsystem					
1	**[TODO: Part name]**	**[TODO: Description / McMaster #]**	**[TODO: 1]**	**[TODO: Steel]**	P
2	**[TODO: Part name]**	**[TODO: Description]**	**[TODO: 1]**	**[TODO: Al 6061]**	F
Valve Subsystem					
3	**[TODO: Part name]**	**[TODO: Description]**	**[TODO: 1]**	**[TODO: SS 316]**	P
4	**[TODO: Part name]**	**[TODO: Description]**	**[TODO: 1]**	**[TODO: Brass]**	F
Housing & Interface					
5	**[TODO: Part name]**	**[TODO: Description]**	**[TODO: 1]**	**[TODO: SS 316]**	F
6	**[TODO: Part name]**	**[TODO: Description]**	**[TODO: 2]**	**[TODO: Viton]**	P
Fasteners & Miscellaneous					
7	**[TODO: Part name]**	**[TODO: Description]**	**[TODO: 10]**	**[TODO: Steel]**	P
Special Tooling					
8	**[TODO: Tooling item]**	**[TODO: Description]**	**[TODO: 1]**	—	P
				Estimated Tota	

Key: P = Purchased, F = Fabricated

[TODO: Add any notes about budget constraints, contingency funds, or items awaiting price quotes.]

Project Management Information

5.1 Updated Task List

[TODO: Provide a detailed task list. Organize by phase or subsystem. Must include:

- **Technical tasks (design, fabrication, testing)**
- **Deliverables for class (reports, presentations)**
- **Team and stakeholder meetings**
- **Procurement / ordering deadlines**

]

Table 5.1: *Updated task list for Winter and Spring quarters.*

#	Task Description	Owner(s)	Deadline
1	Finalize engineering drawings	**[TODO: Name(s)]**	**[TODO: Date]**
2	Order raw materials	**[TODO: Name(s)]**	**[TODO: Date]**
3	Machine actuator housing	**[TODO: Name(s)]**	**[TODO: Date]**
4	Assemble prototype	**[TODO: Name(s)]**	**[TODO: Date]**
5	Conduct thermal testing	**[TODO: Name(s)]**	**[TODO: Date]**
6	Conduct pressure testing	**[TODO: Name(s)]**	**[TODO: Date]**
7	**[TODO: Add more tasks]**		

5.2 Gantt Chart

[TODO: Insert your Gantt chart. This is typically created in Excel, MS Project, or a similar tool and exported as an image.]

[Gantt Chart — Two Quarters]

Export from Excel/MS Project as PNG or PDF.
Must span Winter 2026 through Spring 2026.
Show current progress with a vertical "today" line.

Figure 5.1: *Updated Gantt chart spanning Winter and Spring quarters. The vertical dashed line indicates the current date.*

[TODO: Write a paragraph interpreting the Gantt chart. Highlight key milestones and any tasks that are ahead of or behind schedule.]

5.3 Critical Path Method (CPM) Analysis

[TODO: Insert your CPM network diagram. This must be in GRAPHICAL format.]

[CPM Network Diagram]

Show tasks as nodes, dependencies as arrows.
Highlight the critical path in red or bold.
Include earliest start/finish and latest start/finish times.

Figure 5.2: *Critical path method (CPM) network diagram. The critical path is highlighted in red.*

[TODO: Write a paragraph describing:

- **What the critical path is (list the tasks)**
- **Total project duration along the critical path**
- **Which tasks have float (slack time)**
- **What the analysis tells you about risk and scheduling**
- **Any mitigation strategies for critical-path delays**

]

Cited References

Bibliography

[1] B. Bon, "Passive Temperature Compensation Device — Project Prompt," Sandia National Laboratories, SAND2025-15446O, 2025.

[2] **[TODO: Add reference: textbook, paper, or technical standard]**

[3] **[TODO: Add reference: material property data source]**

[4] **[TODO: Add reference: relevant prior work or patent]**

Appendices

.1 Updated Design Requirements

[TODO: Include the final, updated requirements table here. This should reflect any changes discussed in Section 3.1.1. Organize by category (system-level, actuator, valve, housing, etc.). Include the subsystem-level rolldown specifications.]

.2 Concept Screening and Scoring Matrices

[TODO: Include the screening matrix and weighted scoring matrix from your concept selection process. These were referenced in Section ??.]

.3 Engineering Drawing Package

[TODO: Include complete assembly, sub-assembly, and part drawings. Part drawings must include dimensions and tolerances for all parts that will be MANUFACTURED (not purchased). Follow proper engineering drawing practices.

Organize as:

1. **Full system assembly drawing**
2. **Actuator sub-assembly drawing**
3. **Valve sub-assembly drawing**
4. **Housing sub-assembly drawing**
5. **Individual part drawings (manufactured parts only)**

Each drawing should be on its own page for clarity. Label as Figure A.1, A.2, etc.]

.4 Product Data Sheets and Price Quotes

[TODO: Include manufacturer spec sheets for all purchased components. Include price quotes or screenshots of supplier pricing. This supports the Bill of Materials in Section 4.]

.5 Detailed Calculations

[TODO: If your calculations in Section ?? were summarized for brevity, include the full derivations and spreadsheet screenshots here. Reference Performance_Relationship.xlsx and Thermal_Expansion.xlsx data as appropriate.]