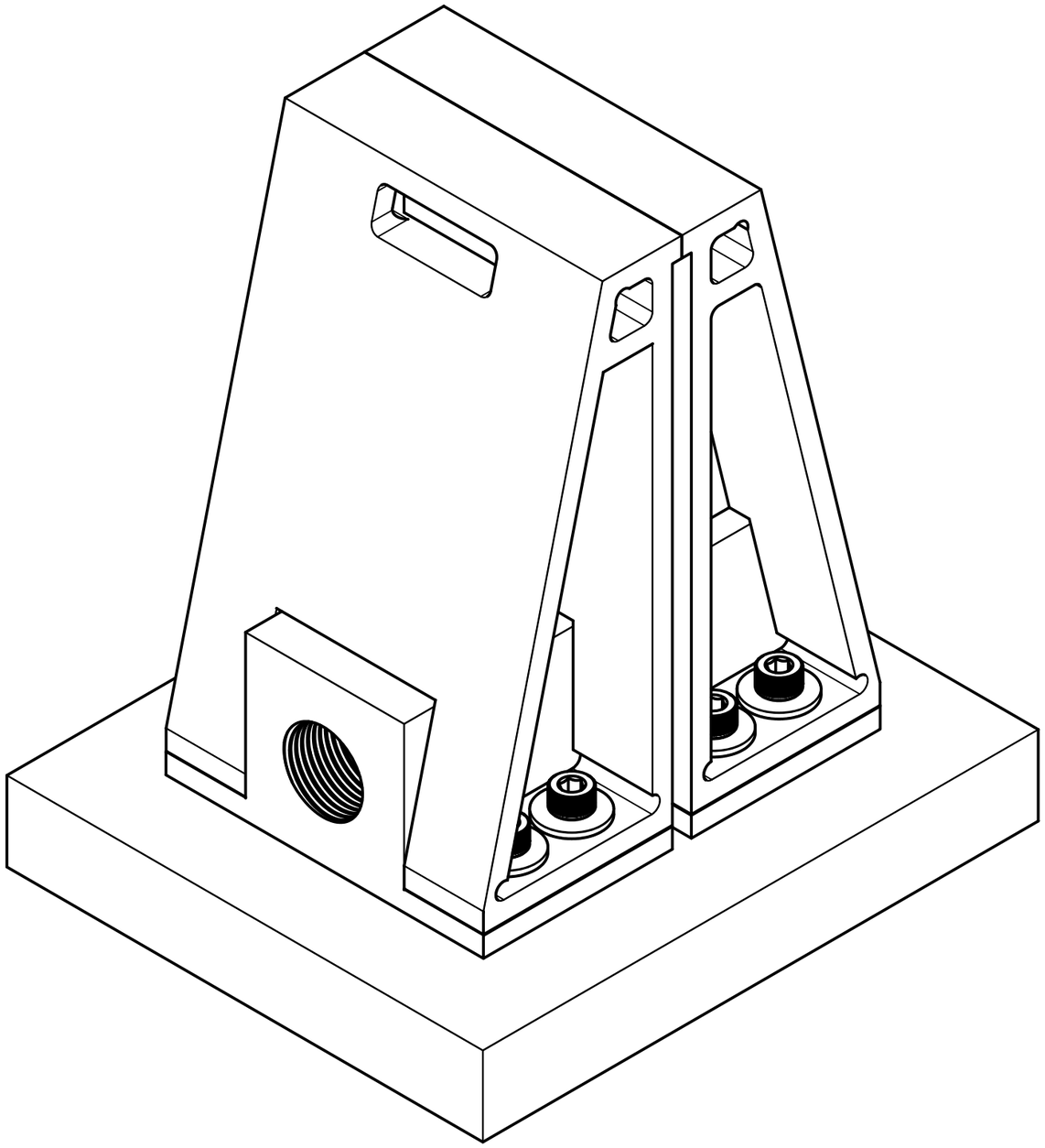

Department: UC DAVIS COLLEGE OF ENGINEERING		Part: Complete Assembly v9	
		Team: THE NOBLE AGGIE LABS	Rev.: 1
Sponsor: Sandia National Laboratories	UNLESS OTHERWISE SPECIFIED DIMENSIONS ARE IN MM TOLERANCES: X.X = ± 0.05 X.XX = ± 0.025 X.XXX = ± 0.01	DWG No.: C0	Material:
		Scale: 1:1	Date of issue: 03/20/2026
			Sheet: 1/11

Parts List		
Item	Qty	Part Number
1	1	Housing Center
2	1	Valve Orifice
3	1	Valve Stem
4	1	Bellows
5	1	Housing Inlet
6	1	Housing Outlet

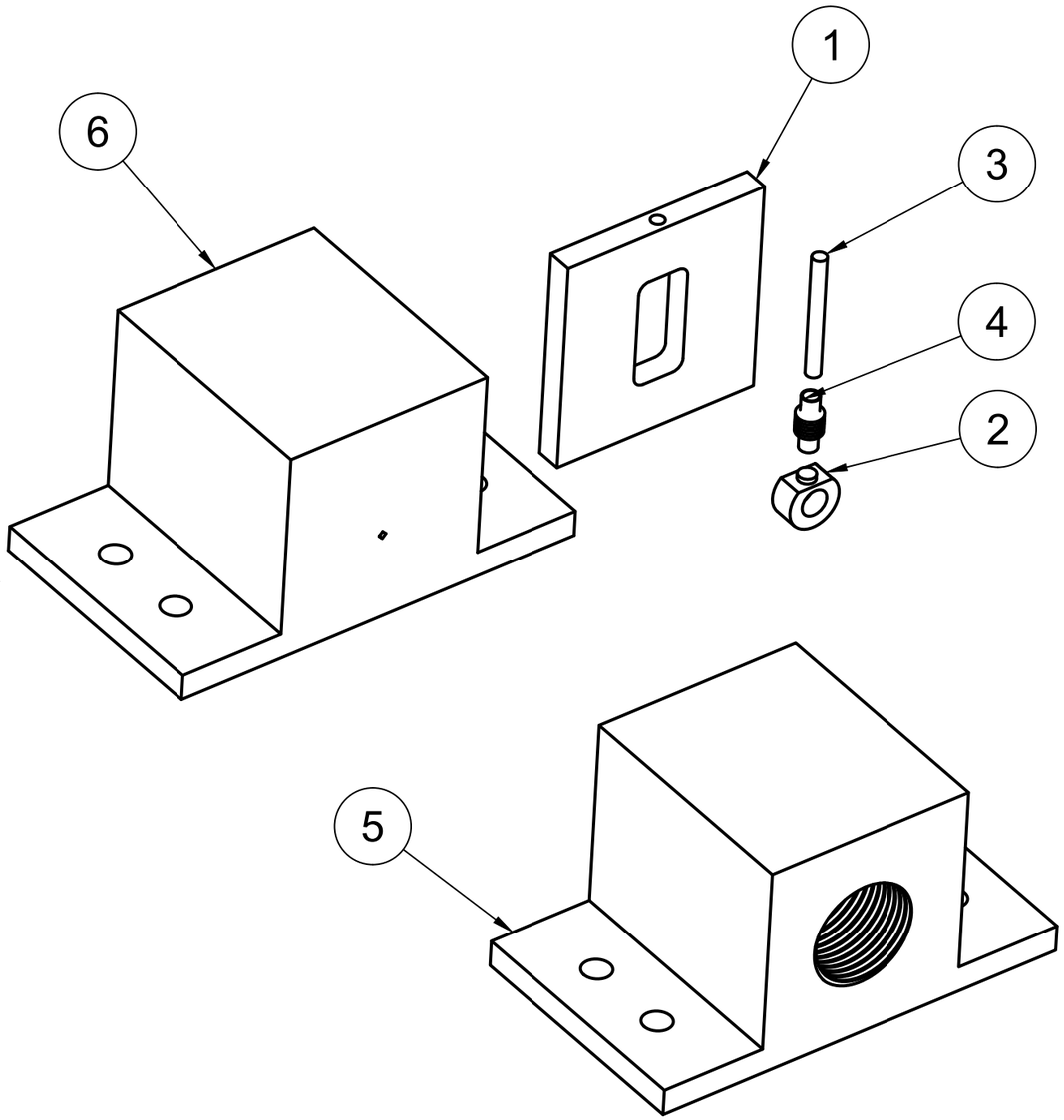

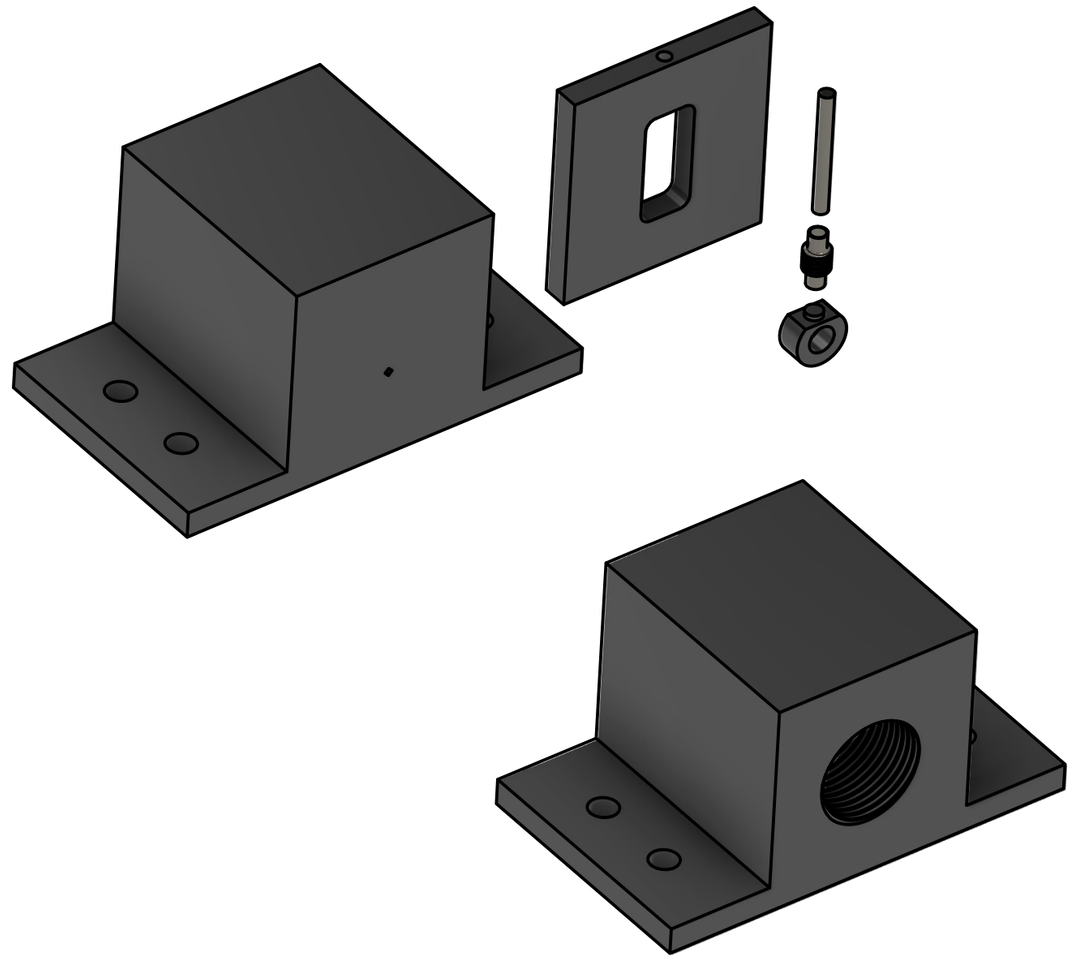

Department: UC DAVIS COLLEGE OF ENGINEERING

Part: Valve Subsystem v11

Team: THE NOBLE AGGIE LABS

Rev.: 1

Sponsor: Sandia National Laboratories

UNLESS OTHERWISE SPECIFIED
DIMENSIONS ARE IN MM

TOLERANCES:
X.X = ± 0.05
X.XX = ± 0.025
X.XXX = ± 0.01

DWG No.: V0

Material:

Scale: 1:1

Date of Issue: 03/20/2026

Sheet: 2/11

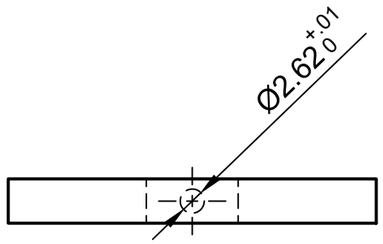

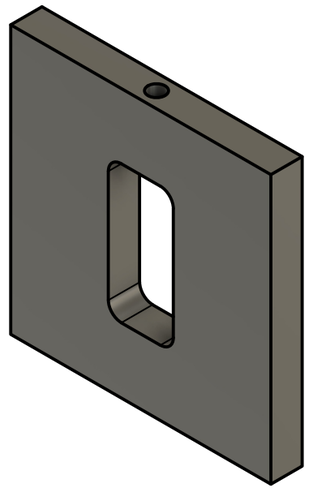

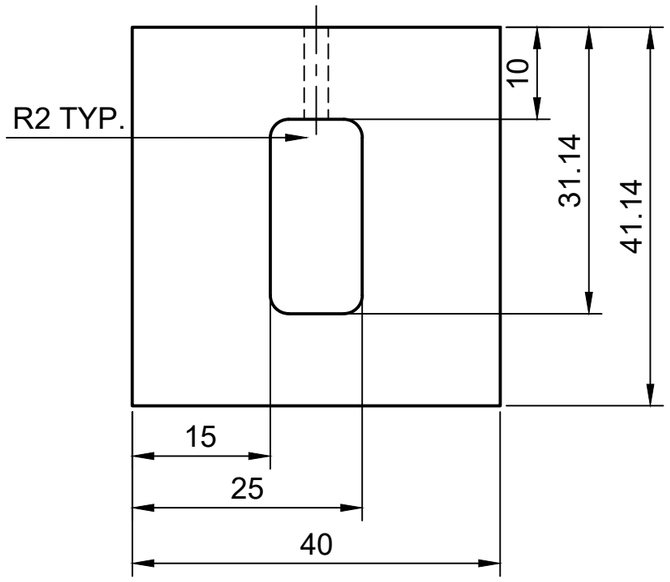

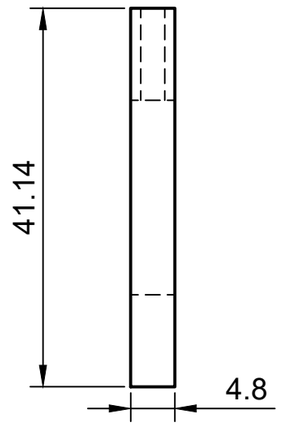

Department: UC DAVIS COLLEGE OF ENGINEERING		Part: Housing Center v2	
		Team: THE NOBLE AGGIE LABS	Rev.: 1
Sponsor: Sandia National Laboratories	UNLESS OTHERWISE SPECIFIED DIMENSIONS ARE IN MM TOLERANCES: X.X = ± 0.05 X.XX = ± 0.025 X.XXX = ± 0.01	DWG No.: V1	Material: 1018 Steel
		Scale: 3:2 (From parent)	Date of issue: 03/20/2026
			Sheet: 3/11

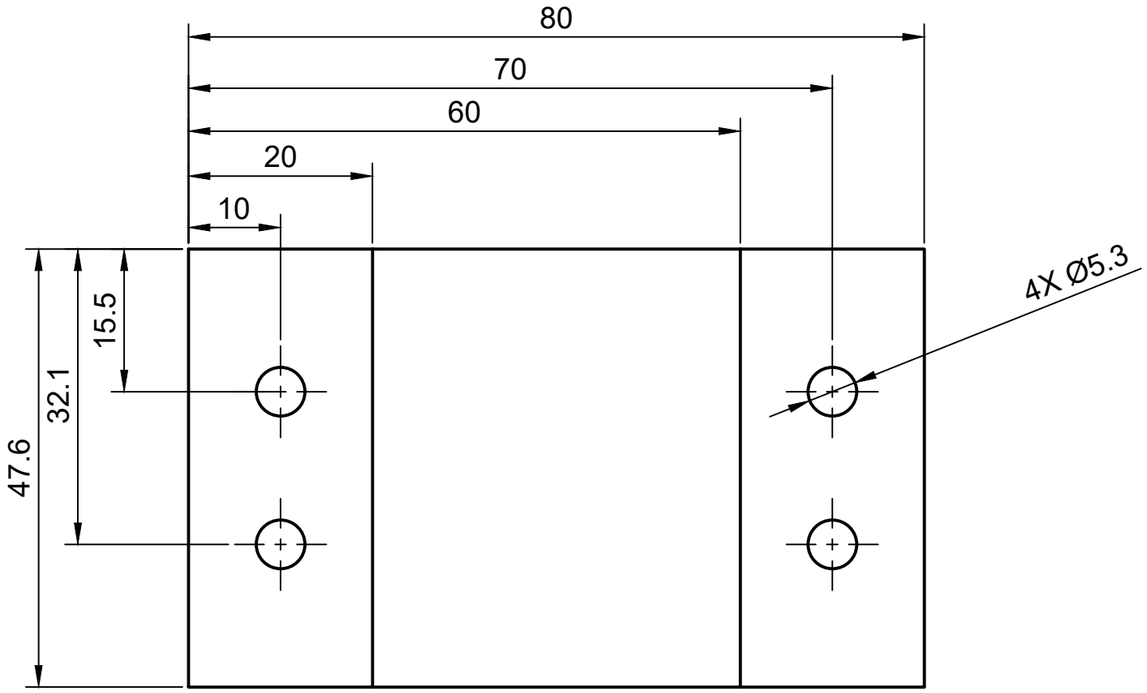

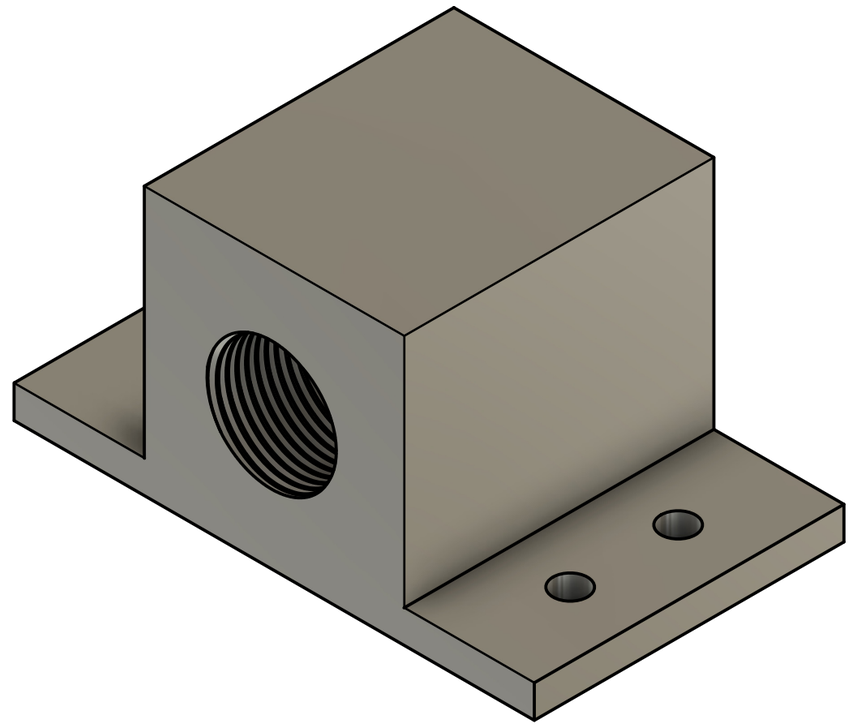

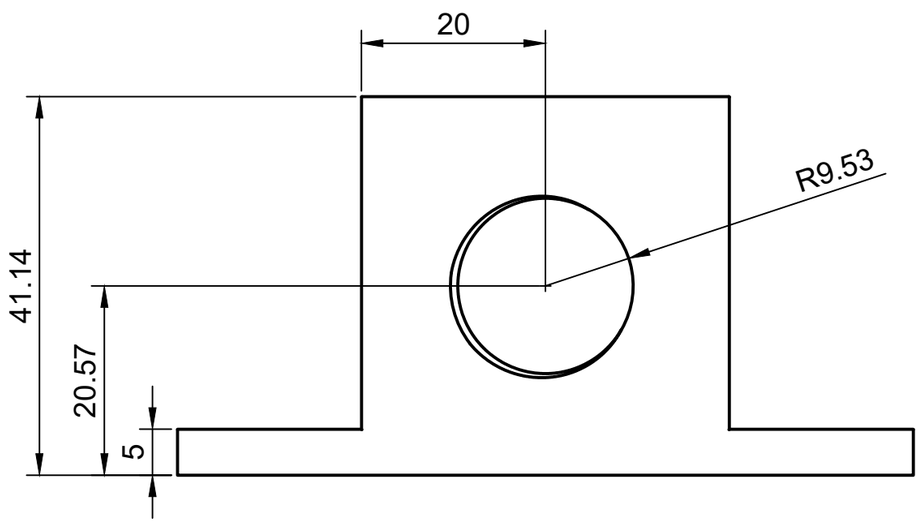

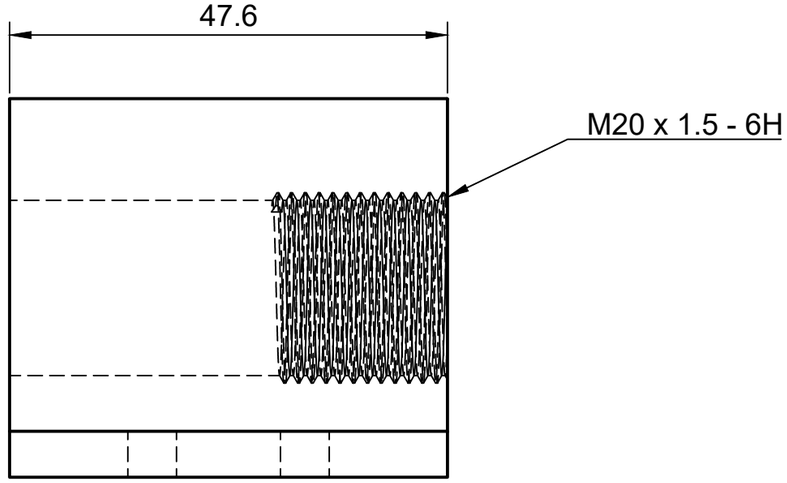

Department: UC DAVIS COLLEGE OF ENGINEERING		Part: Housing Inlet v2	
		Team: THE NOBLE AGGIE LABS	Rev.: 1
Sponsor: Sandia National Laboratories	UNLESS OTHERWISE SPECIFIED DIMENSIONS ARE IN MM TOLERANCES: X.X = ± 0.05 X.XX = ± 0.025 X.XXX = ± 0.01	DWG No.: V2	Material: 1018 Steel
		Scale: 3:2 (From parent)	Date of issue: 03/20/2026
			Sheet: 4/11

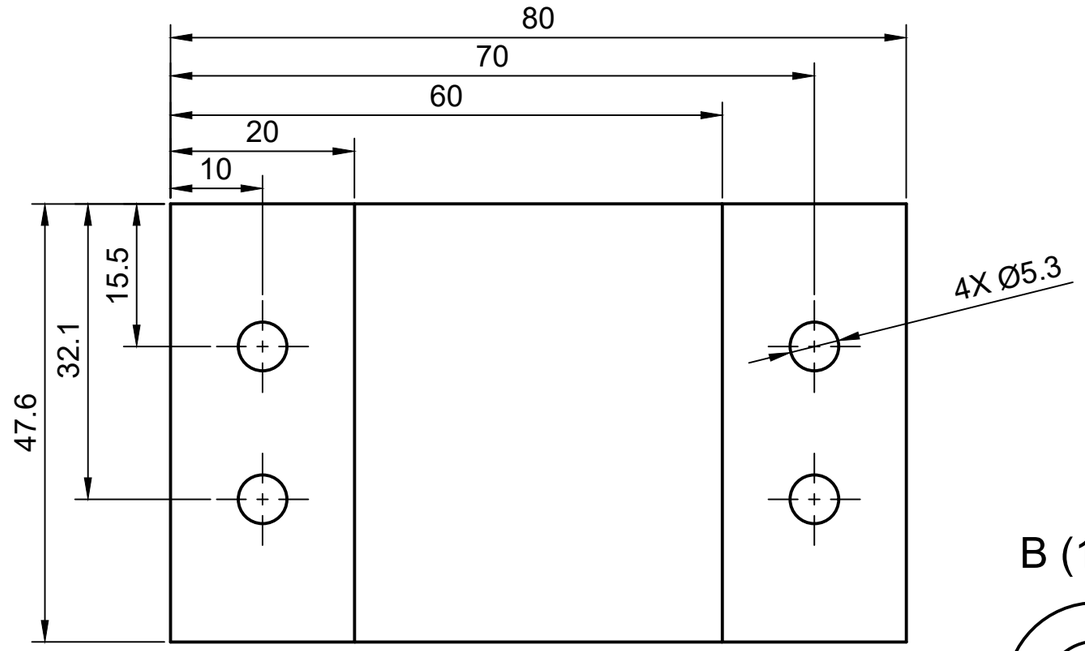

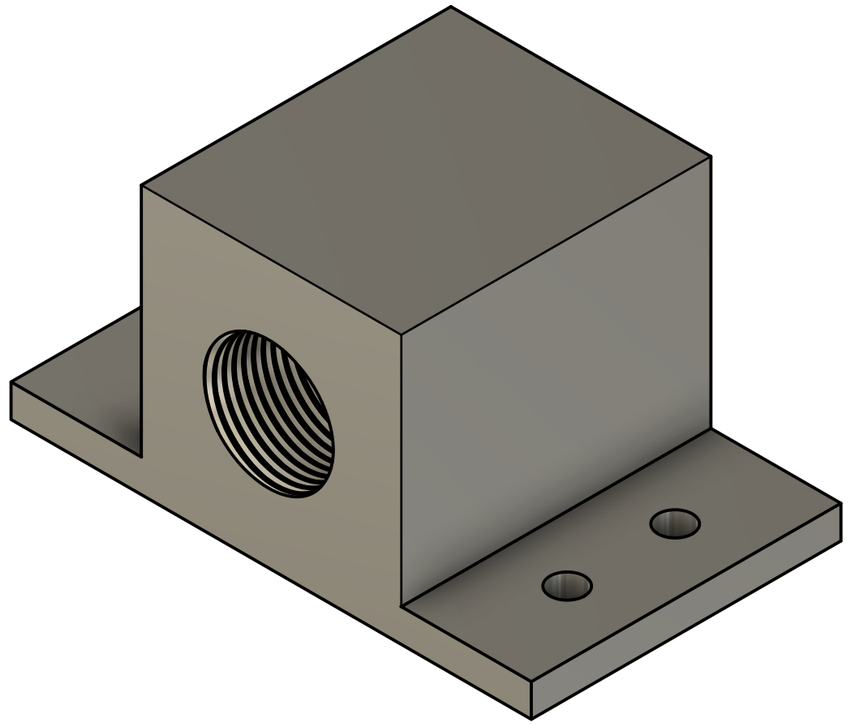

B (10:1)

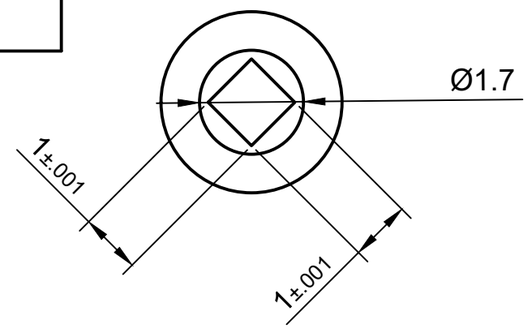

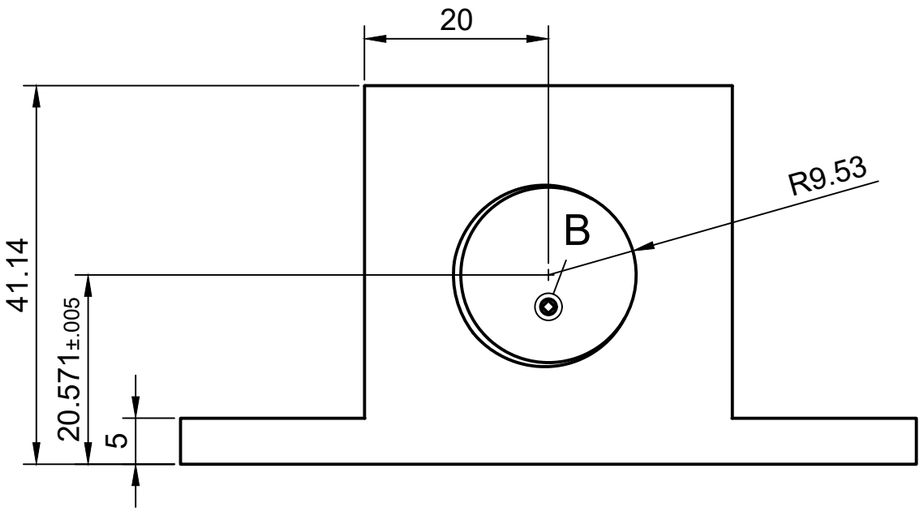

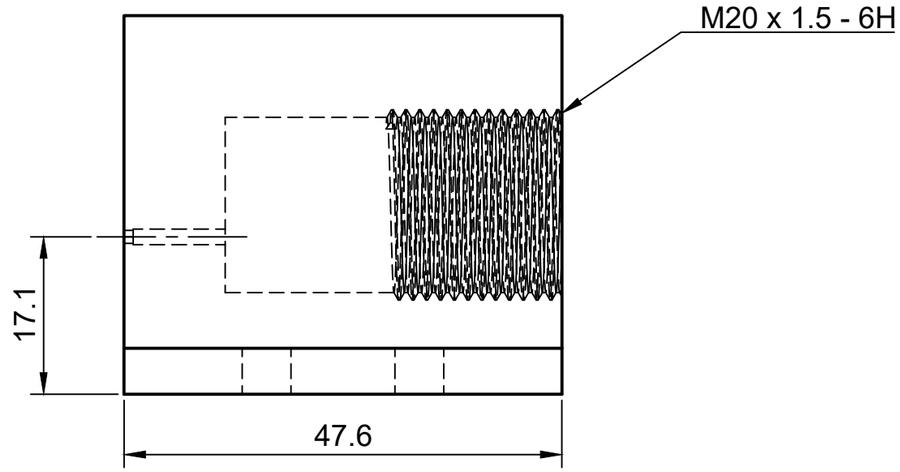

Department: UC DAVIS COLLEGE OF ENGINEERING	Part: Housing Outlet v3		
	Team: THE NOBLE AGGIE LABS		Rev.: 1
Sponsor: Sandia National Laboratories	UNLESS OTHERWISE SPECIFIED DIMENSIONS ARE IN MM TOLERANCES: X.X = ± 0.05 X.XX = ± 0.025 X.XXX = ± 0.01	DWG No.: V4	Material: 1018 Steel
		Scale: 3:2 (From parent)	Date of issue: 03/20/2026
			Sheet: 5/11

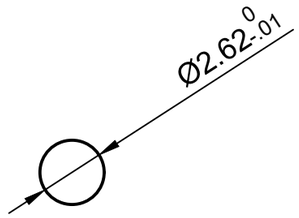

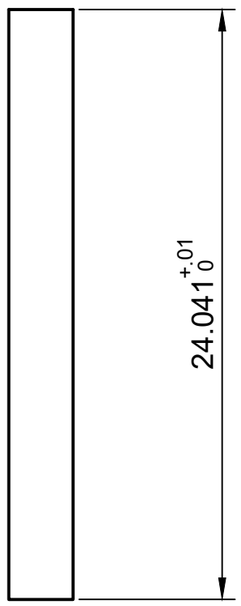

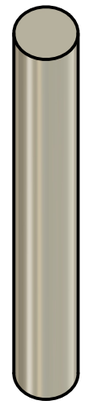

Department: UC DAVIS COLLEGE OF ENGINEERING		Part: Valve Stem v2	
		Team: THE NOBLE AGGIE LABS	Rev.: 1
Sponsor: Sandia National Laboratories	UNLESS OTHERWISE SPECIFIED DIMENSIONS ARE IN MM TOLERANCES: X.X = ± 0.05 X.XX = ± 0.025 X.XXX = ± 0.01	DWG No.: V4	Material: Invar 36
		Scale: 4	Date of issue: 03/20/2026
			Sheet: 6/11

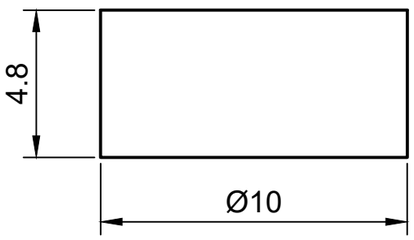

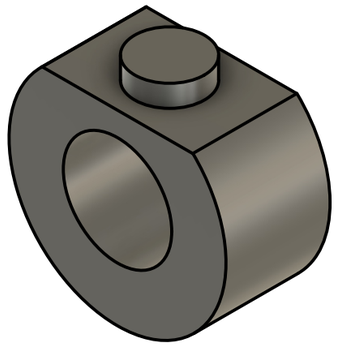

A (15:1)

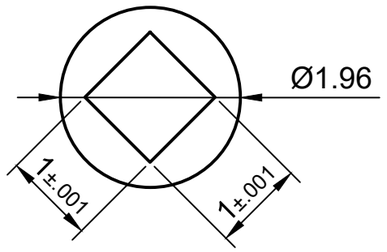

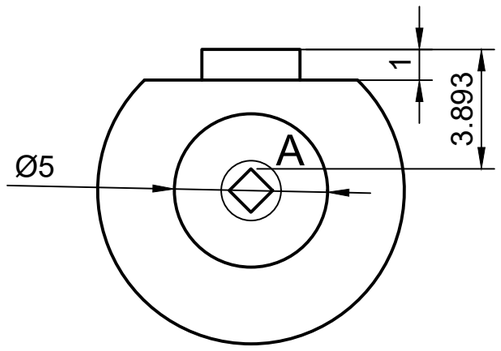

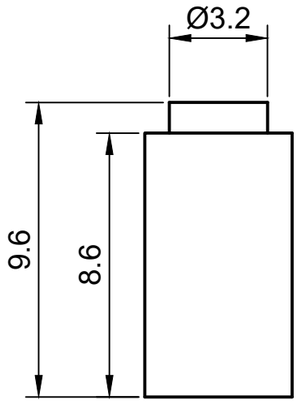

Department: UC DAVIS COLLEGE OF ENGINEERING		Part: Valve Orifice v2	
		Team: THE NOBLE AGGIE LABS	Rev.: 1
Sponsor: Sandia National Laboratories	UNLESS OTHERWISE SPECIFIED DIMENSIONS ARE IN MM TOLERANCES: X.X = ± 0.05 X.XX = ± 0.025 X.XXX = ± 0.01	DWG No.: V5	Material: 1018 Steel
		Scale: 5	Date of issue: 03/20/2026
			Sheet: 7/11

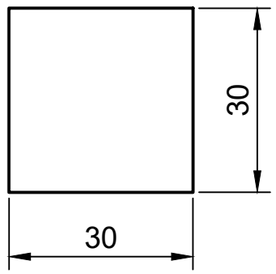

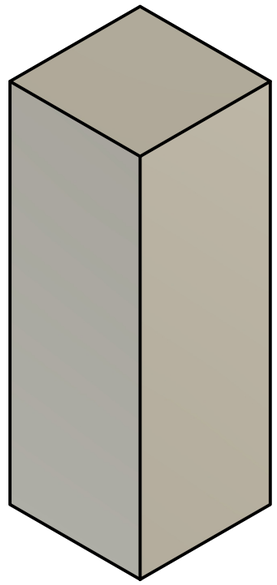

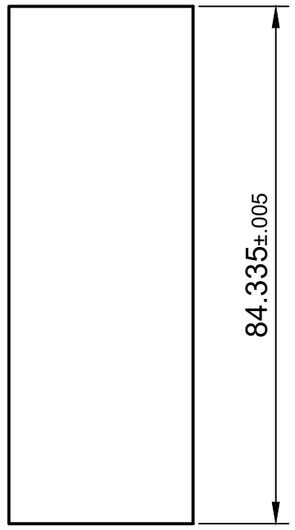

Department: UC DAVIS COLLEGE OF ENGINEERING		Part: Actuator v2	
		Team: THE NOBLE AGGIE LABS	Rev.: 1
Sponsor: Sandia National Laboratories	UNLESS OTHERWISE SPECIFIED DIMENSIONS ARE IN MM TOLERANCES: X.X = ± 0.05 X.XX = ± 0.025 X.XXX = ± 0.01	DWG No.: A1	Material: 6061 Aluminium
		Scale: 1	Date of issue: 03/20/2026
			Sheet: 8/11

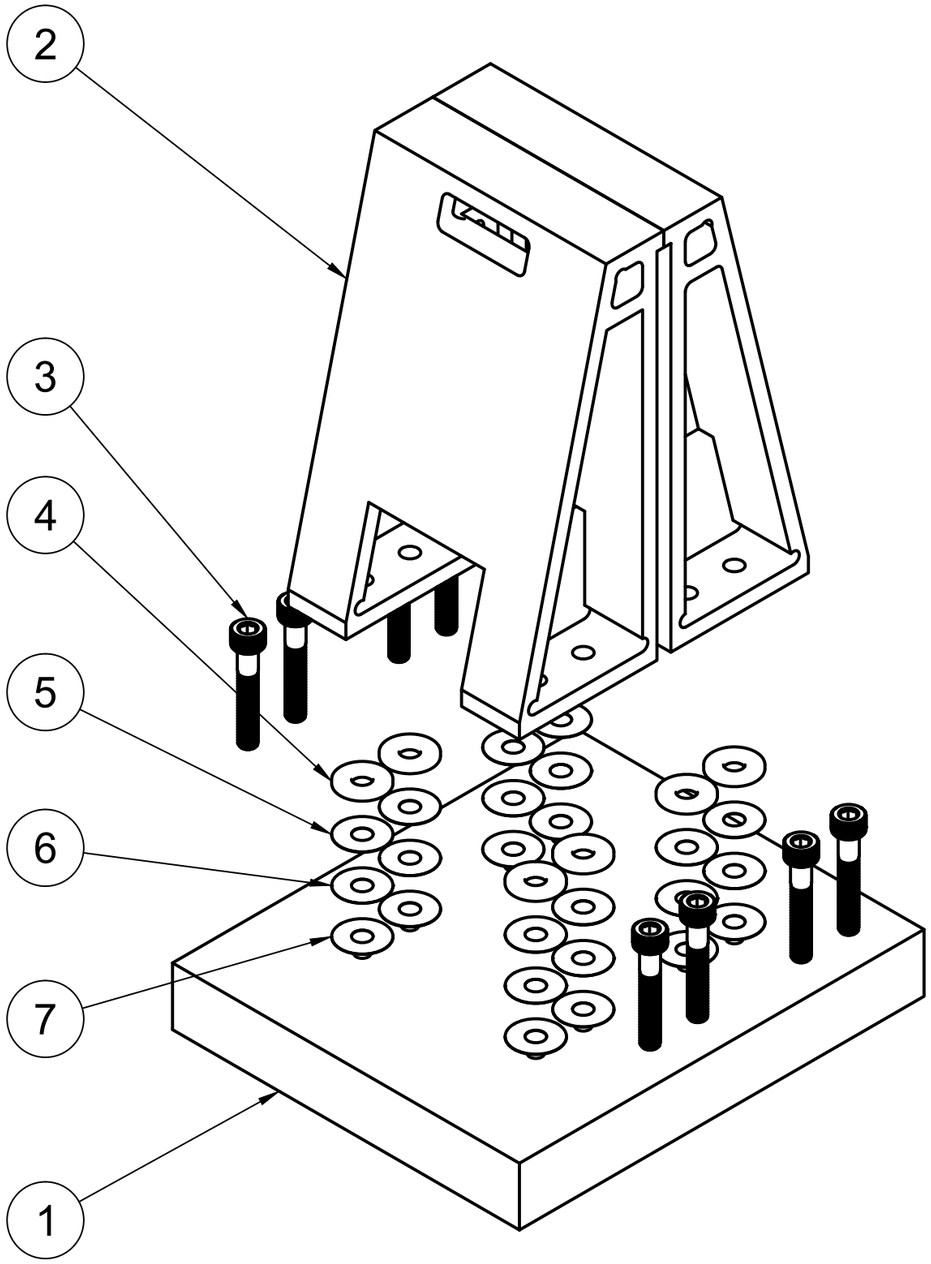

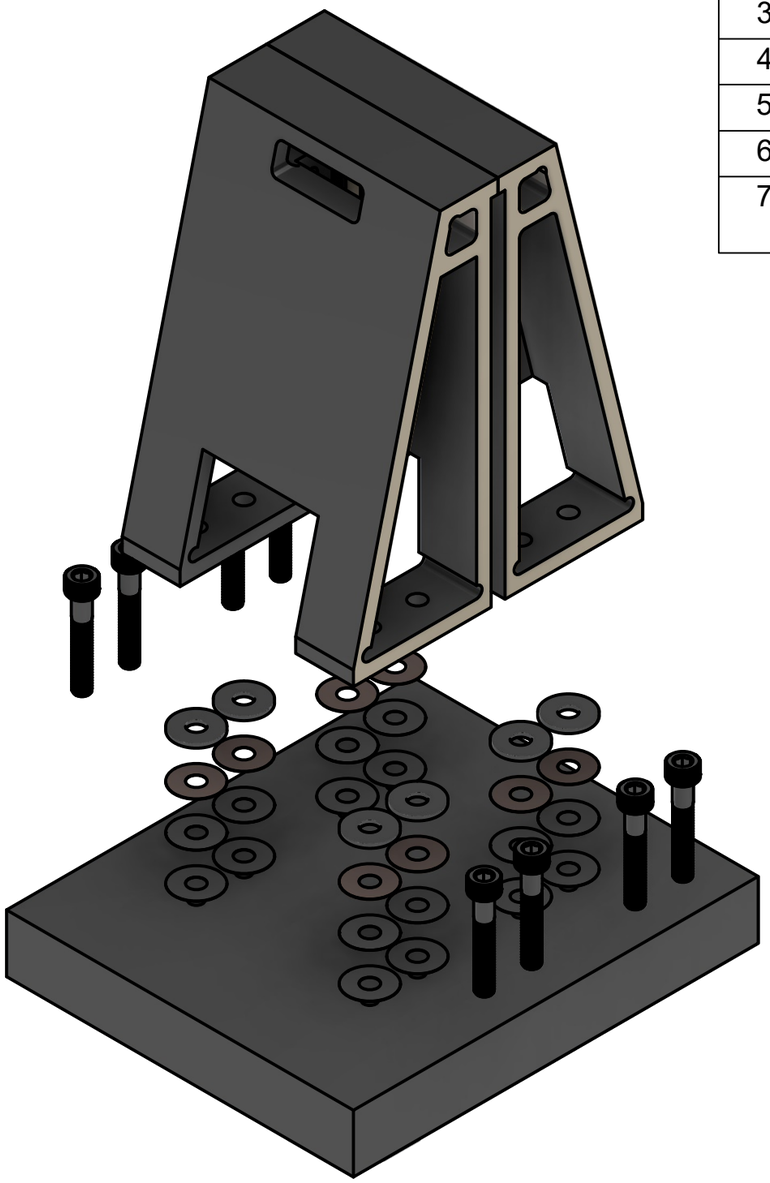

Parts List		
Item	Qty	Part Number
1	1	Fixture
2	2	Mount
3	8	91290A254
4	8	91116A350
5	8	Crush Washer
6	8	Thin Shim Washer
7	8	Thick Shim Washer

Department: UC DAVIS COLLEGE OF ENGINEERING

Part: Mount Subsystem v5

Team: THE NOBLE AGGIE LABS

Rev.: 1

Sponsor: Sandia National Laboratories

UNLESS OTHERWISE SPECIFIED
DIMENSIONS ARE IN MM

TOLERANCES:
X.X = ± 0.05
X.XX = ± 0.025
X.XXX = ± 0.01

DWG No.: M0

Material:

Scale: 2:3

Date of Issue: 03/20/2026

Sheet: 9/11

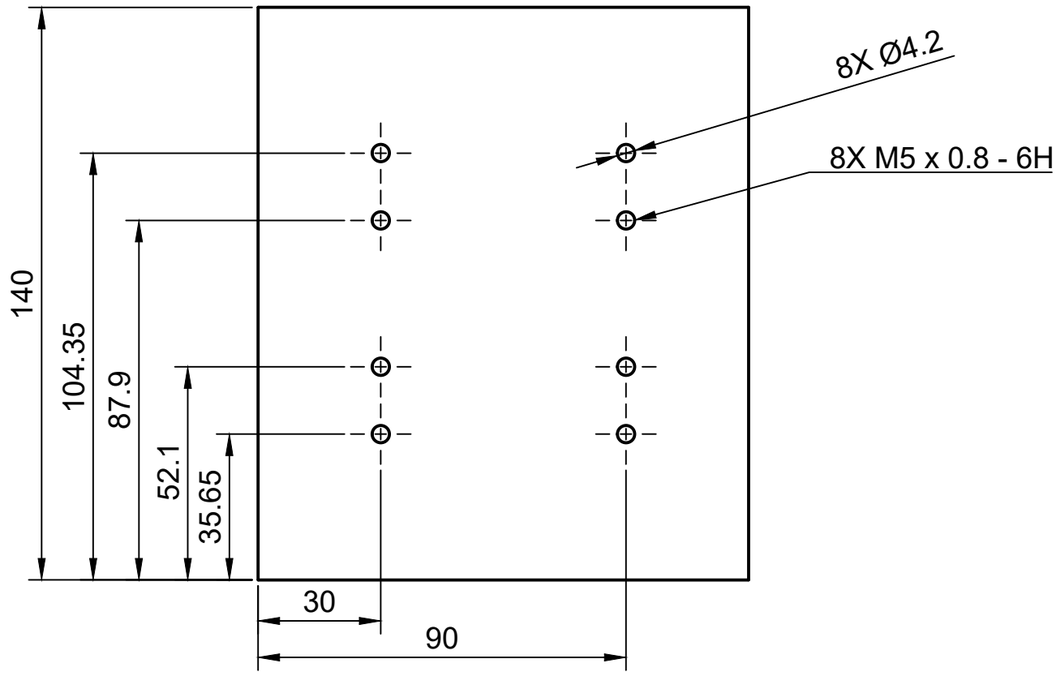

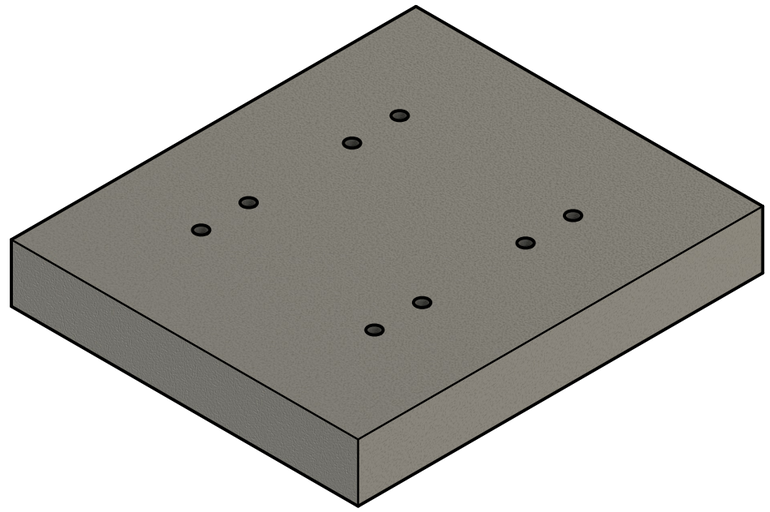

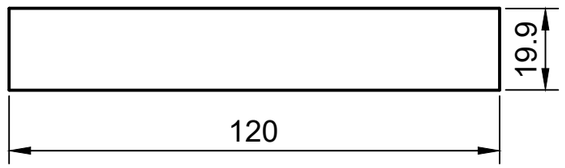

Department: UC DAVIS COLLEGE OF ENGINEERING		Part: Fixture v2	
		Team: THE NOBLE AGGIE LABS	Rev.: 1
Sponsor: Sandia National Laboratories	UNLESS OTHERWISE SPECIFIED DIMENSIONS ARE IN MM TOLERANCES: X.X = ± 0.05 X.XX = ± 0.025 X.XXX = ± 0.01	DWG No.: M1	Material: 1018 Steel
		Scale: 1:4	Date of issue: 03/20/2026 / Sheet: 10/11

D-D (2:3)

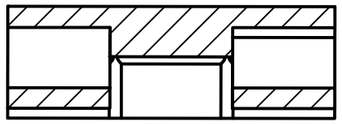

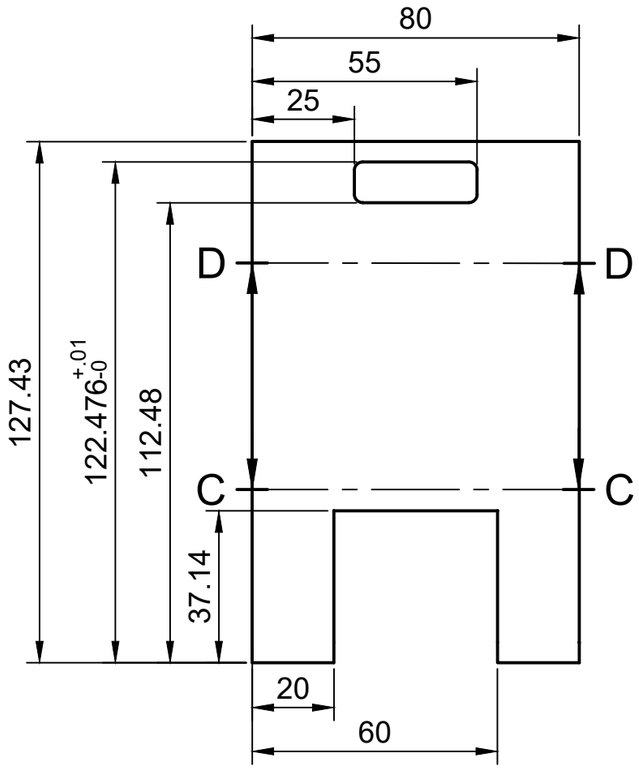

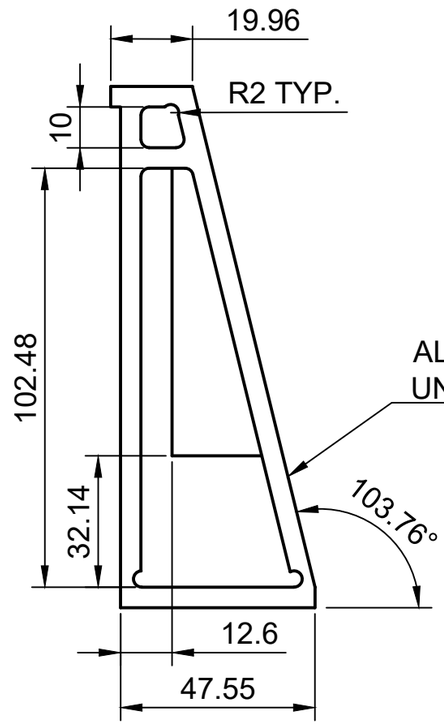

ALL WALL THICKNESSES ARE 5 mm
UNLESS OTHERWISE SPECIFIED

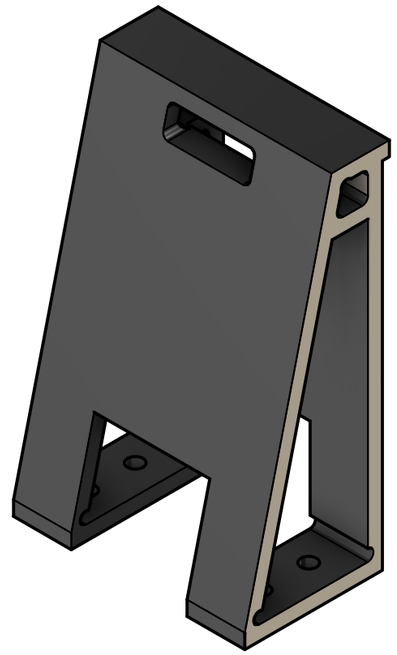

C-C (2:3)

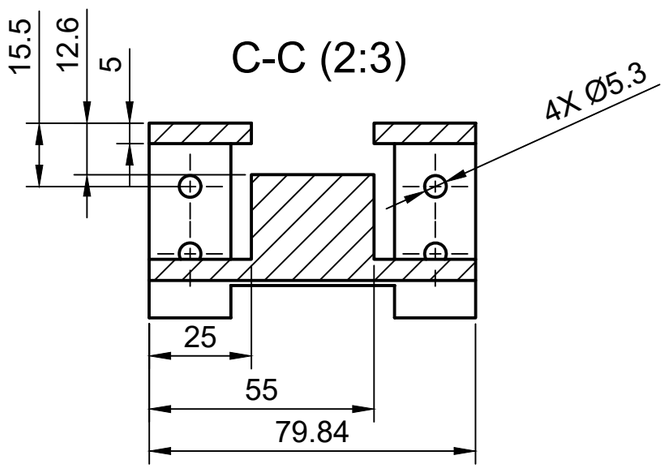

Department: UC DAVIS COLLEGE OF ENGINEERING		Part: Mount v2	
		Team: THE NOBLE AGGIE LABS	Rev.: 1
Sponsor: Sandia National Laboratories	UNLESS OTHERWISE SPECIFIED DIMENSIONS ARE IN MM TOLERANCES: X.X = ± 0.05 X.XX = ± 0.025 X.XXX = ± 0.01	DWG No.: M2	Material: 1018 Steel
		Scale: 2:3 (From parent)	Date of issue: 03/20/2026
			Sheet: 11/11