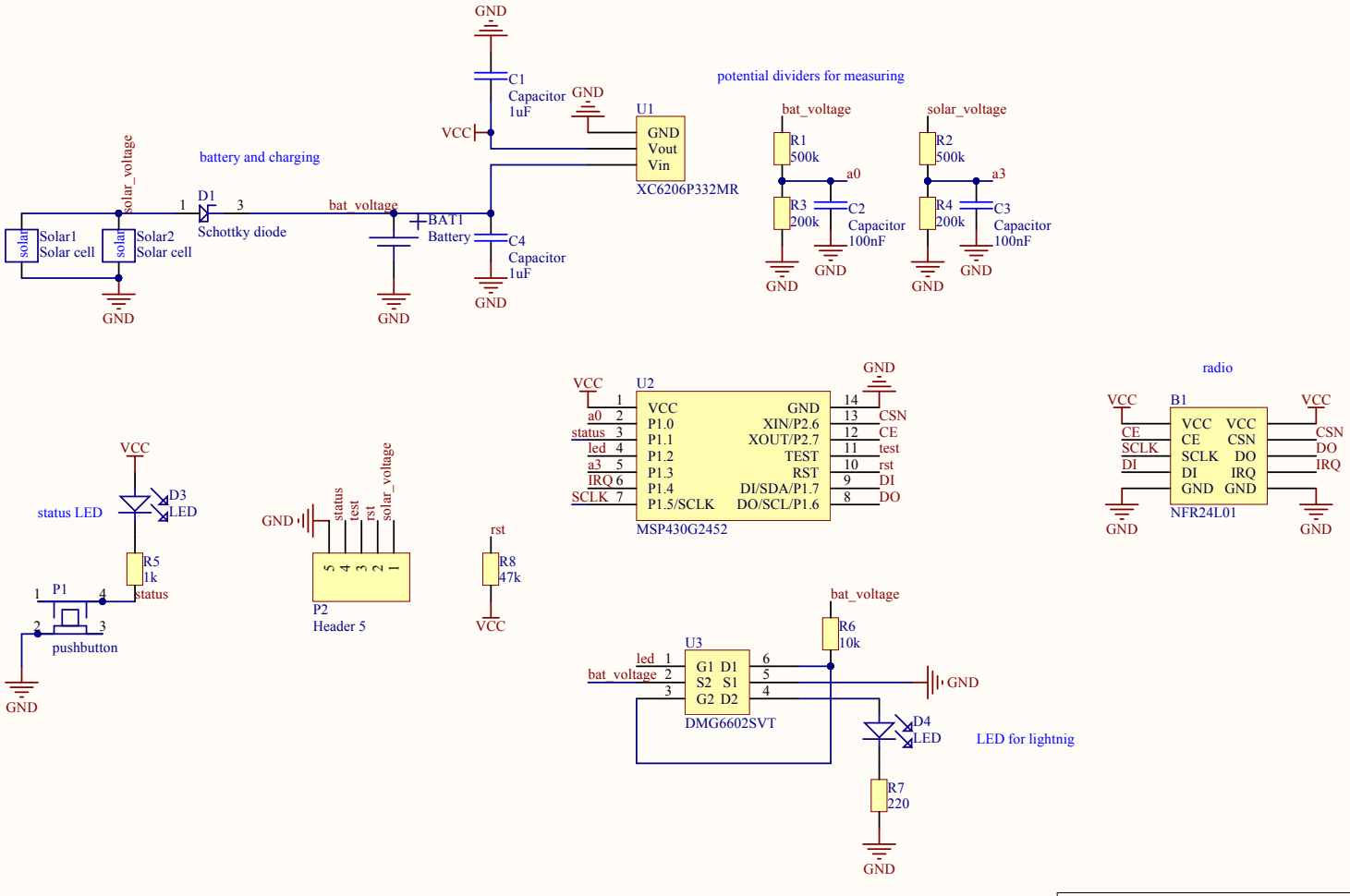

Title		
Size A4	Number	Revision
Date: 1/26/2014		Sheet of
File: Z:\Projects\..\SolarNodeBug.SchDoc		Drawn By:

IRQ

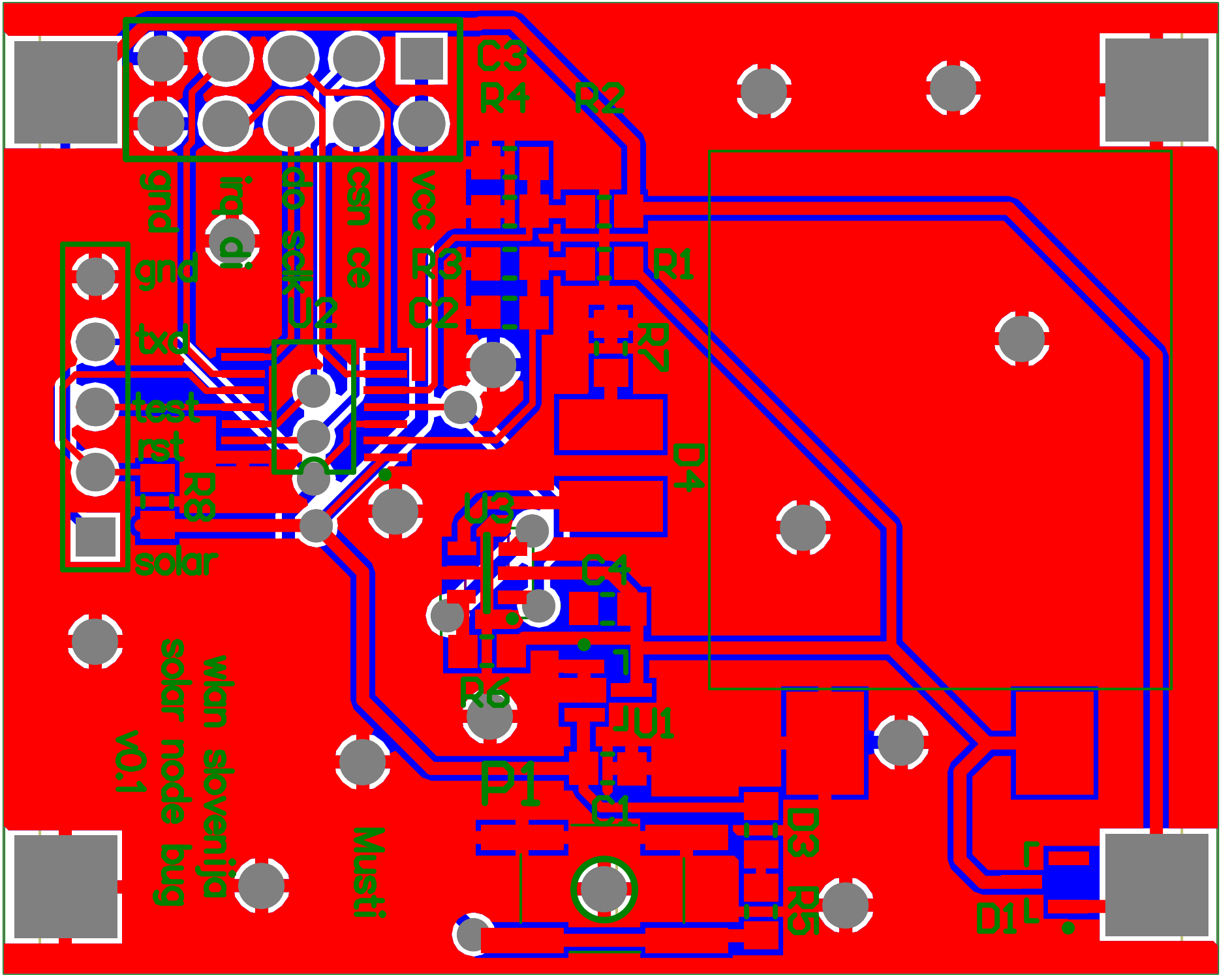
C3
R4
R2
gnd
irq
d0
csn
vcc
gnd
ce
R3
R1
C2
txd
R7
test
rst
D4
R8
U3
solar
C4
R6
JU1
P1
C1
D3
R5
D1
wlan slovenija
solar node bug
v0.1
Must!