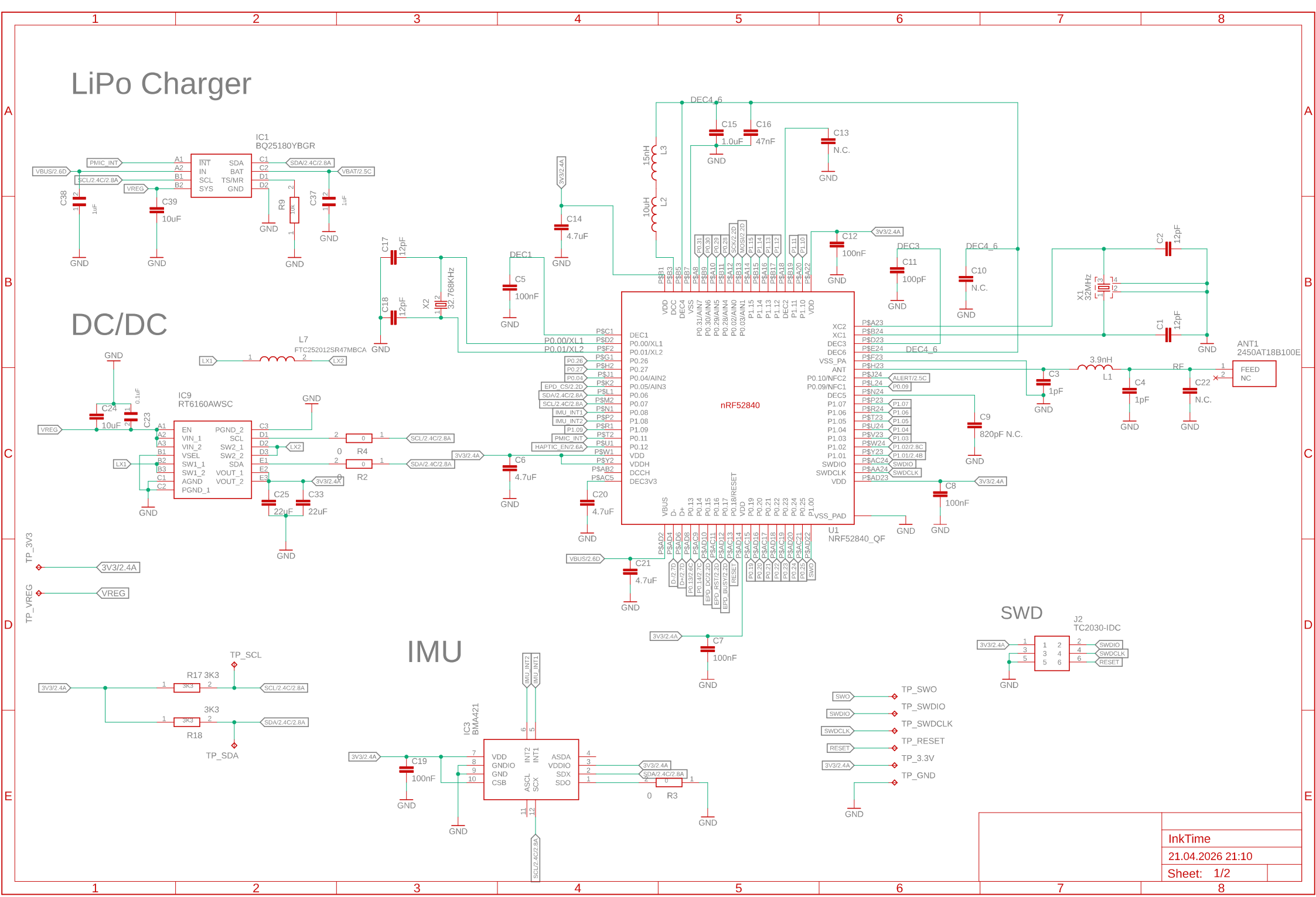

21.04.2026 21:12 f=0.77 (Sheet:)

E-Paper Drive Circuit

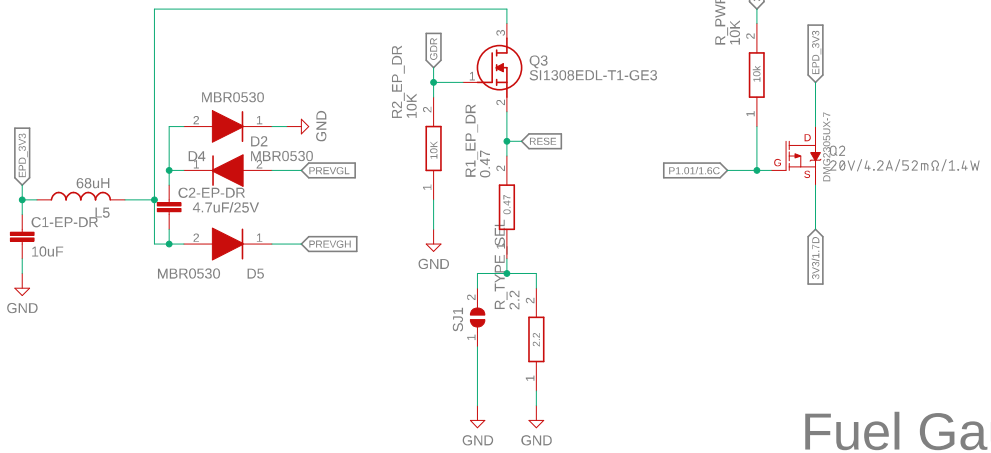

Haptic Driver

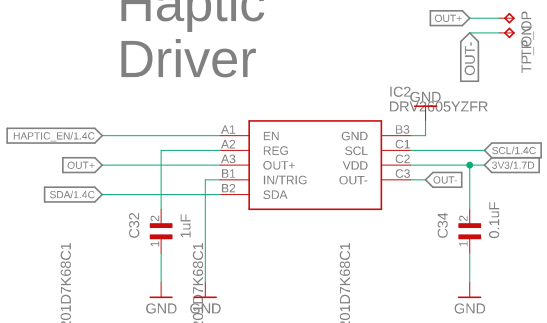

Buttons

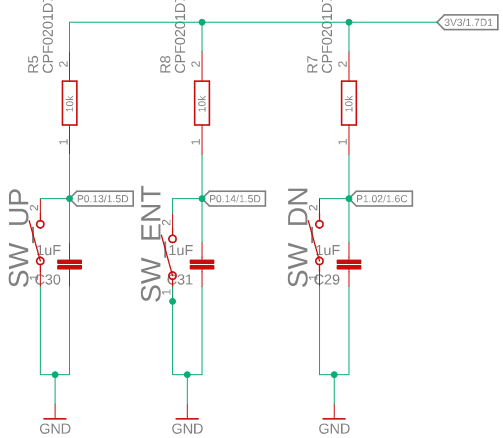

Fuel Gauge

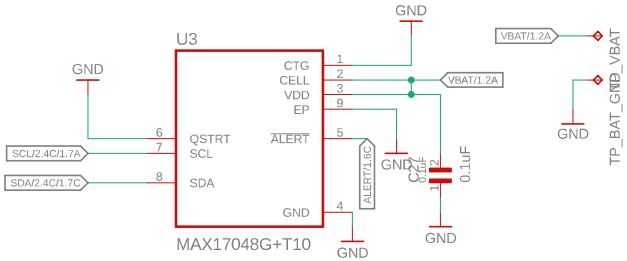

E-Paper Display Connector

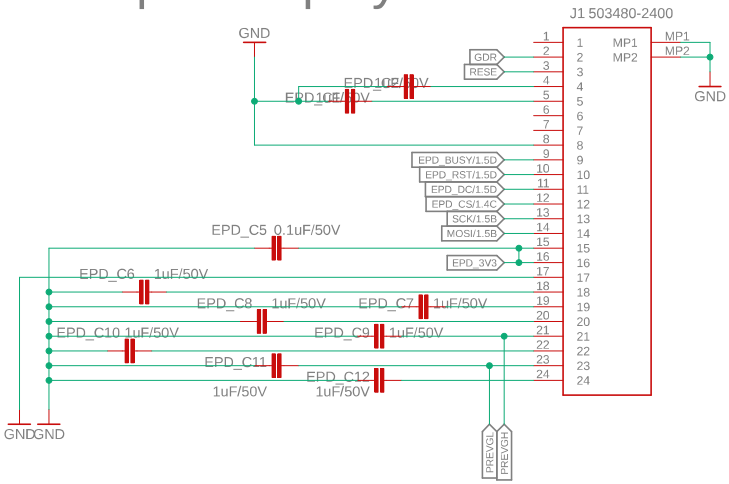

USB C Connector & ESD Protection

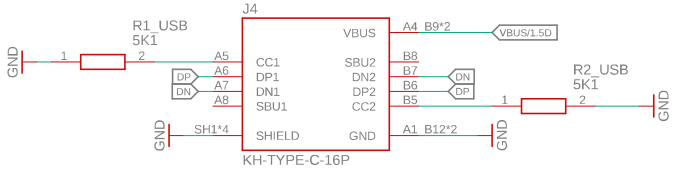

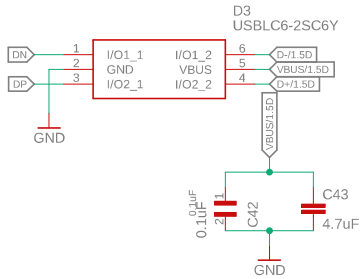

InkTime	
21.04.2026 21:10	
Sheet: 2/2	