Applied Intelligence (2024) 54:3077–3091
https://doi.org/10.1007/s10489-024-05337-w

A light-weight quantum self-attention model for classical data classification

Hui Zhang[1] · **Qinglin Zhao**[1] · **Chuangtao Chen**[1]

Accepted: 12 February 2024 / Published online: 21 February 2024
© The Author(s), under exclusive licence to Springer Science+Business Media, LLC, part of Springer Nature 2024

Abstract
As an interdisciplinary field combining quantum computation and machine learning, Quantum Machine Learning (QML) has shown the potential to outperform classical machine learning on some algorithms. Given that the transformer, with self-attention as its core mechanism, has become a popular backbone model in the field of machine learning, the exploration of a quantum version of the self-attention mechanism has become an intriguing topic. In this paper, we propose a Quantum Self-Attention Model (QSAM) based on Variational Quantum Algorithms (VQA), aiming to combine the advantages of quantum neural network and self-attention together. To implement the self-attention mechanism on quantum neural network, we employ parameterized quantum circuits to learn the features of input data in quantum-enhanced spaces, then introduce the innovative Amplitude-Phase Decomposition Measurement (APDM) to obtain the essential components of self-attention model: ***query***, ***key*** and ***value***. By introducing APDM, we can implement the quantum self-attention model with a lower parameter quantity than that of previous methods, making our QSAM have a better deployability on near-term quantum devices. We apply QSAM on both NLP and CV datasets for binary and multiple classification. The results show that our QSAM outperforms its classical counterpart and is as good as the state-of-the-art quantum self-attention model on NLP datasets. On CV datasets, our QSAM achieves better performance than other quantum image classifiers. These results demonstrate the powerful learning ability of our QSAM.

Keywords Quantum machine learning · Self-attention · Quantum neural network · Data classification · Light-weight

1 Introduction

Quantum machine learning (QML) is an interdisciplinary field combining quantum physics and machine learning. With the potential of quantum computers to outperform any foreseeable classical computers for solving certain computational tasks, QML has emerged as the potential solution to address the challenge of handling an ever-increasing amount of data [1]. Over the past few years, a variety of quantum machine learning algorithms have surfaced. [1–5]. For instance, methods such as quantum support vector machines [6, 7], quantum classification and clustering [8–10], quantum convolution neural network (QCNN) [11–15], quantum recurrent neural network (QRNN) [16, 17], and quantum generative adversarial network (QGAN) [18–20] have been explored. Since each classical machine learning algorithm possesses its own attributes and features, designing quantum circuit structures tailored to their characteristics is necessary for their quantum counterparts. Alongside this, variational quantum algorithms (VQA) have gained prominence as practical paradigm for implementing these quantum adaptations [21, 22]. VQA refers to perform machine learning tasks on quantum computers and optimize the parameters on classical devices. At the core of VQAs are parameterized quantum circuits (PQCs), also known as ansatzes. These are quantum circuits with adjustable parameters that can be tuned during the optimization process. These parameters are analogous to the weights in classical neural networks. Generally speaking, the quantumized models of classical neural networks based on PQCs are also referred to as quantum neural networks.

✉ Qinglin Zhao
qlzhao@must.edu.mo

Hui Zhang
h.zhang2023@hotmail.com

Chuangtao Chen
chuangtaochen@gmail.com

[1] School of Computer Science and Engineering, Macau University of Science and Technology, Avenida Wai Long, Macau 999078, China

Although whether QNNs have a quantum advantage over classical neural networks has not been rigorously proven mathematically, many recent researches show that even at shallow circuit depths, specific categories of QNNs can yield remarkably intricate outcomes [1]. This has also made QNNs one of the most prominent avenues for quantumizing classical machine learning models. It's worth noting that we are in the noisy intermediate-scale quantum (NISQ) era, which means that current quantum algorithms must leverage the limited available resources to perform classically challenging tasks [2].

On the other hand, self-attention has become a pivotal mechanism in the field of natural language processing and machine learning [23, 24]. The currently most trending AI application, ChatGPT, is developed based on the architecture of transformers, with the core component being self-attention module. This architecture has redefined natural language processing by enabling models like ChatGPT to capture intricate contextual dependencies and generate human-like responses. As the backbone of transformers, self-attention allows these models to weigh the significance of different tokens in a sequence, by mapping each input token to $query$, key, $value$ and using them to output the feature vector of the token. Considering an input sequence with S tokens $X = \{\mathbf{x}_i \in \mathbb{R}^N\}_{i=1}^S$, the self-attention mechanism can be described as [19]

$$Attention(Q, K, V) = softmax(\frac{QK^T}{\sqrt{N}})V \tag{1}$$

where, $Q = \{\mathbf{q}_i \in \mathbb{R}^N\}_{i=1}^S$, $K = \{k_i \in \mathbb{R}^N\}_{i=1}^S$, $V = \{v_i \in \mathbb{R}^d\}_{i=1}^S$, with $\mathbf{q}_i = W_q\mathbf{x}_i$, $\mathbf{k}_i = W_k\mathbf{x}_i$, $\mathbf{v}_i = W_v\mathbf{x}_i$. W_q, W_k, W_v are linear projection matrices employed to map the input data to $query$, key, and $value$.

Since self-attention is currently a hot topic in the field of machine learning, it is meaningful to develop a quantum self-attention model that combines the benefits of the self-attention mechanism and quantum computing. Self-attention maps input data into different feature vectors and calculates attention weights based on them. While quantum computing, handling the data in quantum-enhanced spaces, are naturally suited for feature mapping and possess the potential for more powerful feature learning capabilities than classical models. Due to phenomena like quantum superposition and entanglement, QNN could lead to more compact and expressive representations of self-attention patterns, which might not be easily achievable in classical networks. [6].

a) Motivation

Our goal is to design a quantum self-attention model that can be applied to nearterm quantum devices. It should possess the following properties: (i) it uses as few qubit resources as possible, (ii) it has low input-output complexity and requires relatively fewer parameters, (iii) it achieves experimental accuracy comparable to classical models. This is a challenging and non-trivial task. At present, research on quantum self-attention is in its infancy, with only a handful of studies underway. However, some methods require a significant number of quantum bits, making them challenging to use on near-term quantum devices, while others may not extract information comprehensively, leading to less concise and efficient models. Thus, we endeavor to propose an improved quantum self-attention model that inspired from existing research, aiming for greater efficiency as well as the comparable performance.

b) Contribution

We propose an quantum self-attention model (QSAM) based on the VQA framework. The core of our QSAM is an amplitude-phase decomposition measurement (APDM) method. That is, inspired by the property that a quantum state of a qubit can be decomposed into two independent parameters: amplitude and phase, we decompose a quantum system into two sets of classical vectors containing information about amplitude and phase. These vectors represent the information obtained by mapping the quantum system into different classical feature spaces. Benefiting the APDM method, our design uses fewer quantum resources but achieves comparable or better accuracy than existing designs, making it easily implementable on near-term quantum devices. Experimental results show that our model can achieve comparable test accuracy to classical models and SOTA quantum self-attention algorithms on popular datasets. Further more, while the current quantum self-attention models are exclusively employed in NLP tasks, we are the first to extend its application on the image classification tasks.

2 Related works

A straightforward approach to constructing a quantum self-attention architecture involves the substitution of the linear projection matrices W_q, W_k and W_v with parameterized quantum circuits [25]. Building upon this concept, Li et al. [26] proposed a quantum self-attention neural network (QSANN). They used three parameterized quantum circuits to map the input data into $query$, key and $value$, then calculated the attention coefficients classically. It is found that the inner product attention is failed to redistribute the attention coefficients between different token pairs, due to the unitary property of parameterized quantum circuits (which preserving the inner products between tokens) [27]. So they introduced Gaussian function attention as the alternative of

inner product attention to solve this problem. The Gaussian function attention can be written as:

$$\tilde{\alpha}_{s,j} = \frac{\alpha_{s,j}}{\sum_{m=1}^{S} \alpha_{s,m}} \tag{2}$$

where $\alpha_{s,j} := e^{-(\langle Z_q \rangle_s - \langle Z_k \rangle_j)^2}$, both $\langle Z_q \rangle_s$, $\langle Z_k \rangle_j$ are scalar, which are the PauliZ measurement results on the first qubit of $|\psi_q\rangle_s$ and $|\psi_k\rangle_j$, respectively. Then the quantum self-attention module is followed by a classical full-connected layer which is used to complete the classification. The results demonstrate that their QSANN outperforms the leading Quantum-NLP model, which relies on syntactic analysis, as well as a basic classical self-attention neural network in numerical experiments involving text classification tasks on publicly available datasets. However, it's important to note that in this approach, the critical components, i.e. 'query' and 'key', are represented as scalars, inherently carrying a reduced amount of feature information when compared to the $\mathbf{q}$ and $\mathbf{k}$ vectors utilized in classical self-attention mechanisms.

Another quantum self-attention network (QSAN) proposed by Zhao et al. [28] is a completely different implementation path. Instead of computing the attention coefficients classically like Ref. [26], they proposed a novel quantum interpretation of self-attention mechanism with linearization and logicalization, in which the Quantum Logical Similarity is presented firstly to impel a better execution of quantum self-attention mechanism on quantum computers. For two quantum states denoted by $|\mathbf{q}\rangle$ and $|\mathbf{k}\rangle$, Quantum Logical Similarity can be described as follow:

$$\langle \mathbf{q}|\mathbf{k}\rangle := \bigoplus_j (q_j \wedge k_j) \tag{3}$$

where $|q_j\rangle$ and $|k_j\rangle$ denote the j-th qubit of $|\mathbf{q}\rangle$ and $|\mathbf{k}\rangle$, respectively. The symbol $\oplus$ indicates modulo-two addition and the symbol $\wedge$ is logical AND operation. Since inner product (numerical) operations are replaced with logical operations, there is no need to measure the quantum states halfway, ensuring that the inference task can be always executed on the quantum computer without interruption. However, the authors did not provide a theoretical explanation for why the Quantum Logical Similarity is enable to be equivalent to the self-attention mechanism. Besides, this method requires rich of qubits resource, which makes it difficult to be practical at the NISQ era.

Therefore, we propose an new quantum self-attention model base on the essence of quantum nature. We extract more information from the quantum-enhanced space to generate $query$ and key vectors, enhancing the efficiency of capturing intricate contextual dependencies. By utilizing only two quantum registers and two PQCs to generate $query$, key and $value$, we achieve a 1/3 reduction in parameter count compared to existing methods, while the performance is comparable.

3 Quantum self-attention model

3.1 Overall architecture

As shown in the Fig. 1, the proposed quantum self-attention model is consisted of L quantum self-attention blocks and one classical fully-connected layer. Each QSAB comprises a quantum node and a classical node, where the quantum node is responsible for generating $query - key - value$, while the classical node calculates attention coefficients and produces the output for that block. For an input sequential data with n tokens $\mathcal{X} = \{\mathbf{x}_i \in \mathbb{R}^N\}_{i=1}^n$, the quantum self-attention blocks (QSABs) map each token $\mathbf{x}_i$ into feature vector $\mathbf{x}_i^{(L)}$. Then we take the mean of all feature vectors of tokens to obtain the feature vector of the whole sequence: $\mathbf{y} = \frac{1}{S}\sum_{s=1}^{S} \mathbf{x}_s^{(L)}$. Finally, a classical fully-connected layer is employed to complete the prediction, $y := \sigma(\mathbf{w}^T \cdot \mathbf{y} + b)$, where σ is the sigmoid function for binary classification, or softmax funtion for multiple classification. We use cross entropy as the loss function, and update the parameters, which including parameters in the QSABs and fully connected (FC) layer, by using a classical optimizer.

3.2 Quantum node

3.2.1 APDM-based quantum self-attention mechanism

Inside the quantum node, we use Parametrized Quantum Circuits (PQC) to replace classical affine transformations for generating the crucial components of self-attention, i. e., $\mathbf{q}$, $\mathbf{k}$, and $\mathbf{v}$. PQC enables the model to learn features of data in a quantum-enhanced space that are difficult to learn in the classical space, showcasing quantum advantages. The design of the quantum node is based on the concept of amplitude-phase decomposition measurement (APDM). The APDM maps the information of a quantum state into two distinct classical spaces through Pauli-Z and Pauli-X measurements. Its inception originates from the inherent characteristics of quantum systems. Consider a single-qubit quantum state $|\phi\rangle = \cos(\frac{\theta}{2})|0\rangle + e^{i\varphi}\sin(\frac{\theta}{2})|1\rangle$ on bloch sphere. Its projections onto the Z-axis and X-axis can be regarded as two distinct classical features, which can be obtained through Pauli-Z and Pauli-X measurement, respectively. Since the expectations of Pauli-Z and Pauli-X measurements, denoted by $\langle Z\rangle$ and $\langle X\rangle$, are associated to the θ and φ, this method is

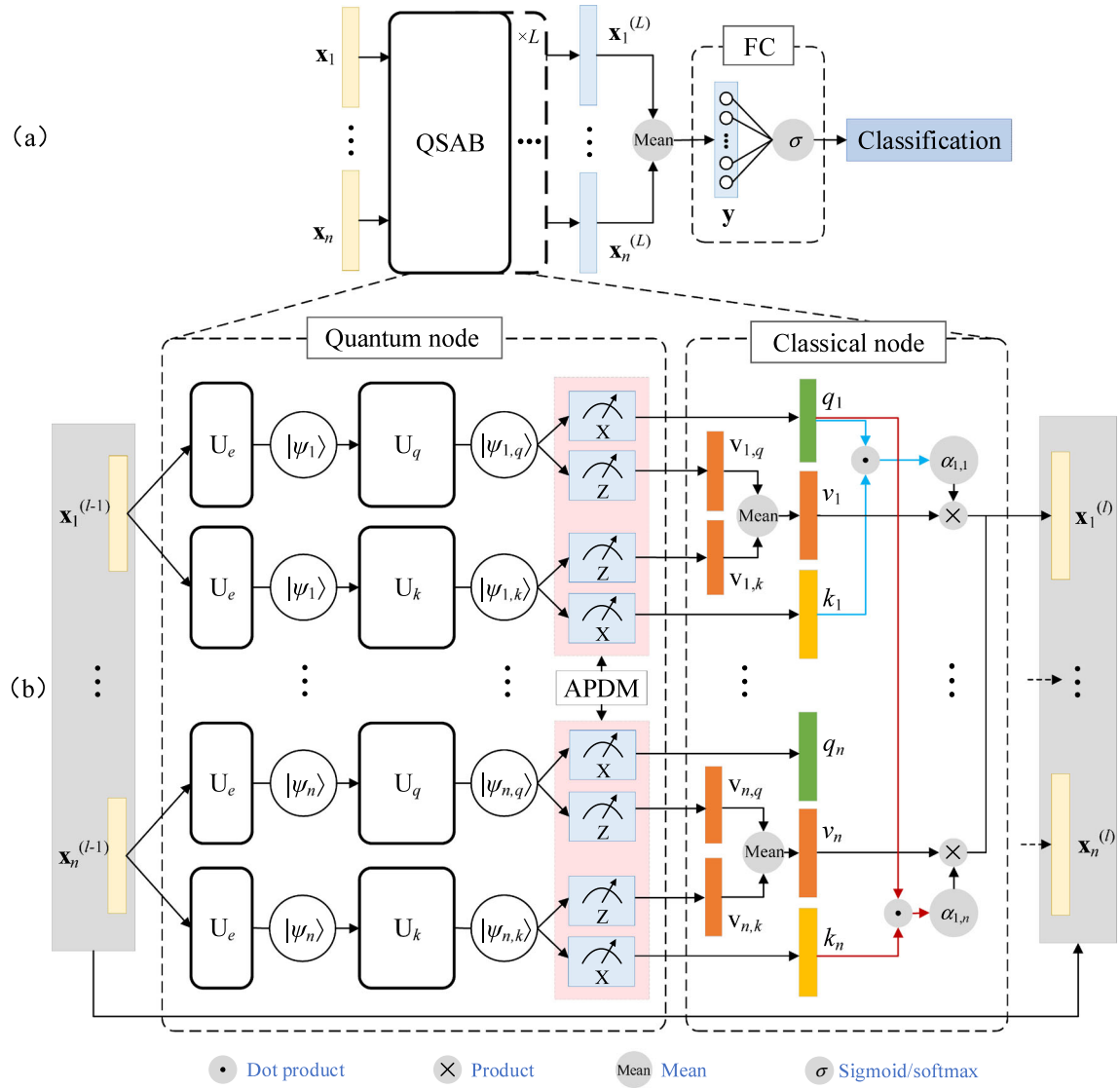

Fig. 1 The quantum self-attention model. (a) The overall structure. (b) The detailed structure of QSAB. For simplicity, we omit the superscript $(l-1)$ for each symbol in QSAB, as it does not participate in the evolution within QSAB. And note that for the first QSAB, the input $\mathbf{x}_i^{(0)} = \mathbf{x}_i$, where $\mathbf{x}_i$ is the raw input data

called amplitude-phase decomposition measurement. In our model, we employ Pauli-Z and Pauli-X measurements on each qubit in two separate quantum registers. This results in two sets of Pauli-X measurement expectations and two sets of Pauli-Z measurement expectations. We assign the two sets of Pauli-X measurement expectations to represent $\mathbf{q}$ and $\mathbf{k}$, respectively. While we use the average of the two sets of Pauli-Z measurement expectations to represent the meaning of $\mathbf{v}$. This approach enables us to generate the $\mathbf{q}, \mathbf{k}, \mathbf{v}$ components by using only two PQCs.

The specific steps are as described in the following text, taking $\mathbf{x}_i^{(l-1)}$ as an example. For the sake of simplicity, we will omit the superscripts associated with $\mathbf{x}_i^{(l-1)}$ and refer to it simply as "$\mathbf{x}_i$". Since superscripts do not play a role in the evolution inside the quantum node, so this simplification does not sacrifice generality.

3.2.2 Data encoding

We use qubit encoding (QE) to encode the classical data to quantum state. For the input token $\mathbf{x}_i \in \mathbb{R}^N$, the complexity of (QE) is $\mathcal{O}(N)$. We choose QE because it is convenient to perform the skip connection of self-attention model and it demands shallow quantum circuit which is easily implemented in NISQ devices. We obtain quantum state $|\psi_i\rangle$

by applying encoding unitary $U_e(\mathbf{x}_i)$ to initialized qubits $|0\rangle^{\otimes N}$:

$$|\psi_i\rangle = U_e(\mathbf{x}_i)|0\rangle^{\otimes N} = \bigotimes_{j=1}^{N} \cos(\frac{x_i^j}{2})|0\rangle + \sin(\frac{x_i^j}{2})|1\rangle \quad (4)$$

Where x_i^j is the jth element in $\mathbf{x}_i$ re-scaled to range $[0, \pi]$. The encoding unitary $U_e(\mathbf{x}_i)$ can be implemented by employing $R_y(x_i^j)$ gates on the jth qubit. So it can be expressed as $U_e(\mathbf{x}_i) = \bigotimes_{j=1}^{N} R_y(x_i^j)$. Note that we apply the same data encoding on two quantum registers, each of them consists of N qubits.

3.2.3 Evolution in PQCs

Now we have two identical quantum states $|\psi_i\rangle$ prepared on two quantum registers. Two parameterized unitary, denoted by $U_q(\boldsymbol{\theta})$ and $U_k(\boldsymbol{\theta})$, are employed to obtain two distinct quantum coherence states, $|\psi_{i,q}\rangle = U(\boldsymbol{\theta}_q)|\phi_i\rangle$ and $|\psi_{i,k}\rangle = U(\boldsymbol{\theta}_k)|\phi_i\rangle$. The parameterized unitary $U_q(\boldsymbol{\theta})$ and $U_k(\boldsymbol{\theta})$, also called parameterized quantum circuit (PQC), play a role similar to the classical affine transformations of self-attention model. It adheres to the following properties: a) all qubits have to be entangled with each others to form a coherence quantum system; b) it is enable to generate the quantum state which can reach 'wide corners of the Hilbert space'. According to the principles, we opt for the PQC as depicted in the Fig. 2. In this structure, the basic unit, which is shown in the dashed box, is consisted of Rx, Ry, Rx gates and CNOT gates. Since Rx Ry Rx sequence can generate arbitrary rotation in SU(2) and CNOT gates provide necessary entanglement capabilities for the circuit, the basic unit is capable to generate the entire unitary group [29]. Several basic units can be stacked to enhance the expressibility of the PQC, and after that, an additional layer of Ry gates is added for fine-tuning before measurements. The $U_q(\boldsymbol{\theta})$ and $U_k(\boldsymbol{\theta})$ are the same in structure but different in learnable parameters. Each ansatz has $N \times d$ learnable parameters, where N denotes quantity of qubits and d represents the depth of PQC, i.e. the number of layers of parameterized gates. For instance, in each basic unit, there are three layers of parameterized gates: an Rx layer, an Ry layer, and another Rx layer. For the PQC in this paper, d=3D+1, where D represents the number of stacks of basic units.

We conduct the expressibility analysis on the chosen structure of our PQC, as elaborated in Section 4.1. Additionally, we compare the performance of our PQC with the PQC employed in Ref. [26]. The results indicate that with the equal number of parameters, our PQC exhibits stronger expressibility, while utilizing less CNOT gates. For further details, please refer to Appendix A.

3.2.4 Amplitude-phase decomposition measurement (APDM)

After going through the PQCs, we obtain a quantum states in the quantum-enhanced space, $|\psi_{i,q}\rangle$ and $|\psi_{i,k}\rangle$, which possess the learned feature information about the input data by the model. Then we use APDM to map the feature information from quantum-enhanced spaces to classical spaces. Taking the example of $|\psi_{i,q}\rangle$, we employ Pauli-Z and Pauli-X measurements on each qubit, and denote $\langle Z_{i,q}^j\rangle$, $\langle X_{i,q}^j\rangle$ as the corresponding measurement expectations on the jth qubit of the first register, obtaining $\mathbf{q}_i$ and $\mathbf{v}_{i,q}$:

$$\mathbf{q}_i := [\langle X_{i,q}^1\rangle, ..., \langle X_{i,q}^N\rangle]^T, \quad (5)$$

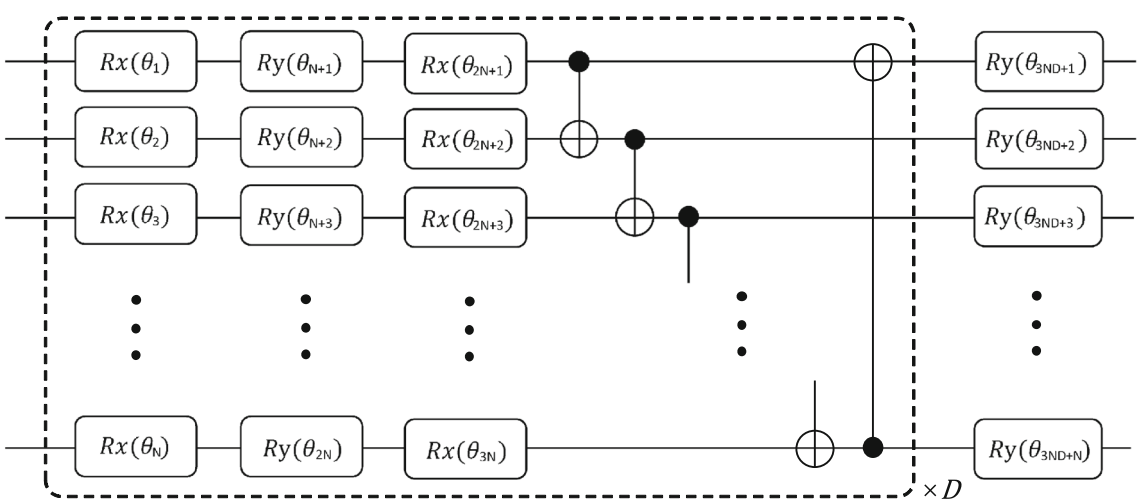

Fig. 2 The structure of PQC used in QSAB. The circuit block in the dashed box is the basic unit, which can be stacked D times to enhance the expressibility

$$\mathbf{v}_{i,q} := [\langle Z_{i,q}^1 \rangle, ..., \langle Z_{i,q}^N \rangle]^T. \tag{6}$$

Applying the same approach to $|\psi_{i,k}\rangle$, we obtain

$$\mathbf{k}_i := [\langle X_{i,k}^1 \rangle, ..., \langle X_{i,k}^N \rangle]^T, \tag{7}$$

$$\mathbf{v}_{i,k} := [\langle Z_{i,k}^1 \rangle, ..., \langle Z_{i,k}^N \rangle]^T. \tag{8}$$

Finally, we take the mean of $\mathbf{v}_{i,q}$ and $\mathbf{v}_{i,k}$ as the $value$:

$$\mathbf{v}_i := [\langle Z_i^1 \rangle, ..., \langle Z_i^N \rangle]^T, \text{ with } \langle Z_i^j \rangle = \frac{1}{2}\left(\langle Z_{i,q}^j \rangle + \langle Z_{i,k}^j \rangle\right). \tag{9}$$

3.2.5 Expressibility analysis

Assume $\rho_{in}(\mathbf{x}) = |\psi_{in}(\mathbf{x})\rangle\langle\psi_{in}(\mathbf{x})|$ be a corresponding density operator of an input vector $\mathbf{x} \in \mathbb{R}^N$. $\rho_{in}(\mathbf{x})$ can be represented as a set of Pauli operators $\{P_i\} \subset \{I, X, Y, Z\}^{\otimes N}$ with $a_i(\mathbf{x})$ as coefficients, $\rho_{in}(\mathbf{x}) = \sum_i a_i(\mathbf{x}) P_i$. The specific form of $a_i(\mathbf{x})$ depends on the data encoding method. For QE method, $a_i(\mathbf{x})$ is a linear combinations of a bunch of trigonometric functions of $\mathbf{x}$. A parameterized unitary $U(\boldsymbol{\theta})$ acting on $\rho_{in}(\mathbf{x})$ creates the output state, which can also be represented as a set of $\{P_j\}$ with expectations of a Pauli observables $\{B_j(\mathbf{x}, \boldsymbol{\theta})\}$ as coefficients [21], $\rho_{out}(\mathbf{x}, \boldsymbol{\theta}) = \sum_j B_j(\mathbf{x}, \boldsymbol{\theta}) P_j$. Here, $B_j(\mathbf{x}, \boldsymbol{\theta})$ is linear combination of $a_i(\mathbf{x})$,

$$B_j(\mathbf{x}, \boldsymbol{\theta}) = \sum_i u_{ij}(\boldsymbol{\theta}) a_i(\mathbf{x}) \tag{10}$$

where $\{u_{ij}\}$ is determined by the circuit structure and adhere unitarity constraints. Since the observables in APDM are all Pauli observables, each element of the $\mathbf{q}$, $\mathbf{k}$ and $\mathbf{v}$ is exactly one of elements within the set $\{B_j(\mathbf{x}, \boldsymbol{\theta})\}$. For the chosen circuit structure in our model, the u_{ij} are linear combinations of a bunch of trigonometric functions of θ. That indicates that the quantum node possesses three key properties for simulating feature extraction of classical neural networks:

a) Every element of the output vector can be correlated with all elements in the input vector. The (10) bears a strong resemblance in form to affine transformation in classical neural networks, $y_j = \sum_i w_{ij} x_i$. The difference lies in that the $a_i(\mathbf{x})$ terms in (10) may appear in product form, like $\cos(x_1)\sin(x_2)\ldots$, which is hard simulated in classical neural networks.

b) The form of $\{u_{ij}\}$ makes sure that it can approximate any real number within the $[-1, 1]$ range with a relatively small error, enabling itself to play a role of weight w_{ij} in a rescaled form.

c) By choosing different combination of observables $\{B_j\}$, we can obtain different output vectors in distinct classical feature spaces. It is important to note that due to the unitarity constraints of $\{u_{ij}\}$, it is challenging to maintain complete independence among these distinct feature spaces. Hence, we use two parameterized unitary matrices to generate $\mathbf{q}$ and $\mathbf{k}$ to ensure their independence.

3.2.6 Complexity analysis

We make a comparison about the cost of quantum resources between our method (QSAM) and Ref. [26]' method (QSANN), taking into account the requirements for encoding and measurement as well. Recall that N denotes quantity of qubits and d represents the depth of each PQC. Note that the dimensionality of input data and $\mathbf{v}$ in QSANN is Nd. As shown in Table 1, compared to previous work, our method reduces the encoding complexity and measurement complexity from $\mathcal{O}(NdL)$ to $\mathcal{O}(NL)$. The parameter count is reduced from $3NdL$ to $2NdL$, a reduction of one-third, due to our adoption of APDM. Therefore, our model structure is more concise and efficient, making it more easily deployable on near-term quantum devices.

3.3 Classical node

The $\mathbf{q}$, $\mathbf{k}$ and $\mathbf{v}$, which are generated by the quantum node, are sent to the classical node to compute attention coefficient:

$$\alpha_{i,j} = softmax(\mathbf{q}_i \mathbf{k}_j^T) \tag{11}$$

where $i, j \in S$, the number of tokens for an input sequence. Here, we cancel the scale factor $\frac{1}{\sqrt{d}}$ because the values of each elements in $\mathbf{q}$ and $\mathbf{k}$ are in range [0, 1]. That ensures the value of the inner product will be limited in a certain range, avoiding the problem of gradient disappearance in model training. Denote L as the number of QSABs, for l^{th} $(0 \le l \le L)$ QSAB, its output can be written as:

$$\mathbf{x}_i^{(l)} = \mathbf{x}_i^{(l-1)} + \sum_{j=1}^{S} \alpha_{i,j}^{(l)} \cdot \mathbf{v}_j^{(l)}, \tag{12}$$

Specifically, $\mathbf{x}_i^{(0)}$ is the input data $\mathbf{x}_i$.

Table 1 Comparison about the quantum resource consumption of the QSANN and QSAM

Methods	Requirements of data encoding	# Para in PQCs	Requirements of measurements
QSANN [26]	$3NdL$	$3NdL$	$(Nd+2)L$
QSAM	$2NL$	$2NdL$	$4NL$

4 Experimental implementation

We first demonstrate the expressibility of the quantum node, then benchmark our QSAM with the QSANN proposed in Ref. [26] on NLP datasets. Furthermore, we apply the QSAM to CV datasets to verify it a universal classifier for machine learning.

4.1 Feasibility of APDM

In this section, we test the ability of our PQC (i. e. $U_q(\boldsymbol{\theta})$ and $U_k(\boldsymbol{\theta})$, as they are the same in structure, we consider them as one in this section) to simulate affine transformations and validate the feasibility of APDM.

We randomly select a set of parameters $\{w_{ij}\}$ to generate an affine transformation $\mathbf{y}_{true} = \boldsymbol{W}\mathbf{x}$, where w_{ij} is the elements of the matrix $\boldsymbol{W}$ and $w_{ij} \in [-1, 1]$. Both the input and output dimensions are 4. Then using the output of the PQC to fit the output of the constructed classical affine transformation with the same input data $\mathbf{x} \in [-1, 1]$. Denote $\mathbf{y}_{pred}$ as the output of PQC with the input $\mathbf{x}$, and $Loss = MAE(\mathbf{y}_{pred} - \mathbf{y}_{true})$, where MAE is Mean Absolute Error. The training dataset consists of 1000 samples, while the testing dataset consists of 100 samples. The experiments are conducted with the basic unit stacked once and three times (i.e., D=1 and D=3). Therefore, the depth of the circuits, d=3D+1, is 4 for D=1 and 10 for D=3. From Fig. 3, it can be observed that when d=4, the PQC can roughly approximate affine transformations. When d=10, the approximation accuracy is significantly improved, allowing for a good fit to affine transformations. This indicates that the PQC is capable to be the alternative of the affine transformation, and its expressibility can be enhanced with increasing circuit depth.

We employe the APDM method, enabling a single PQC to simulate two sets of affine transformations simultaneously. Therefore, we randomly generate two distinct affine transformations with two different parameter matrices, $\boldsymbol{W}_A$ and $\boldsymbol{W}_B$. Their outputs are $\mathbf{y}_A$ and $\mathbf{y}_B$, correspondingly. We use the two expectation vectors, $[\langle Z^1\rangle, ..., \langle Z^4\rangle]^T$ and $[\langle X^1\rangle, ..., \langle X^4\rangle]^T$, which are generated by APDM, to fit $\mathbf{y}_A$ and $\mathbf{y}_B$, respectively. Here, we also use MAE as the loss function.

As shown in Fig. 4, when the circuit depth is shallow (d=4), PQC can roughly approximate two affine transformations, but with significant errors. When d reaches 10, the predicted values are much closer to the true values. This indicates that the PQC is progressively learning how to fit the two distinct affine transformations. Figure 5 displays the training loss curves for different numbers of layers. It indicates that: (i) the training loss curve of the model converges well with minimal smooth fluctuations, (ii) for different values of d, the model typically converges within the range of 50 to 300 epochs, after which the loss stabilizes, (iii) as the depth of the circuit increases, the model converges more slowly but

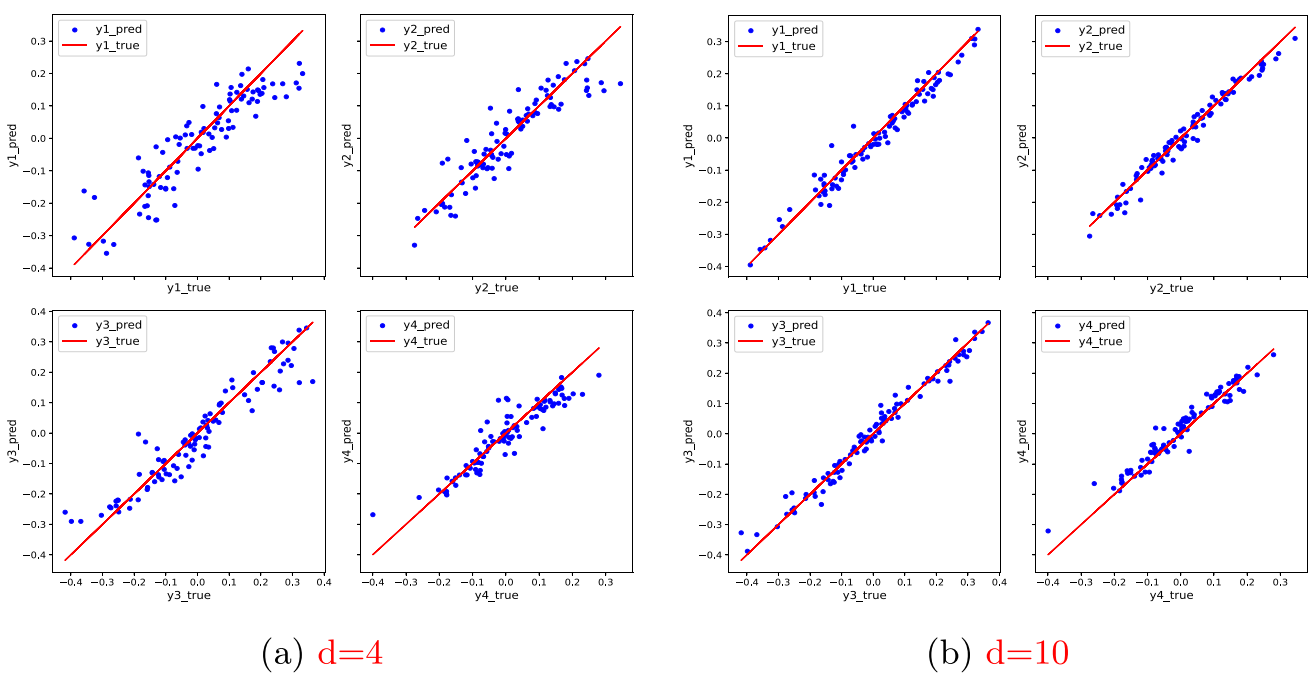

Fig. 3 Demonstration of the ability of PQC in our QSAM to approximate single affine transformation. y_i_true denotes each element in the output vector of the affine transformation, which is located on the red line. While y_i_pred, the blue circle, denotes each element of the output vector generated by the PQC, where $i = 1, 2, 3, 4$. Thus, as the blue circles are closer to the red line, it indicates a better fitting performance

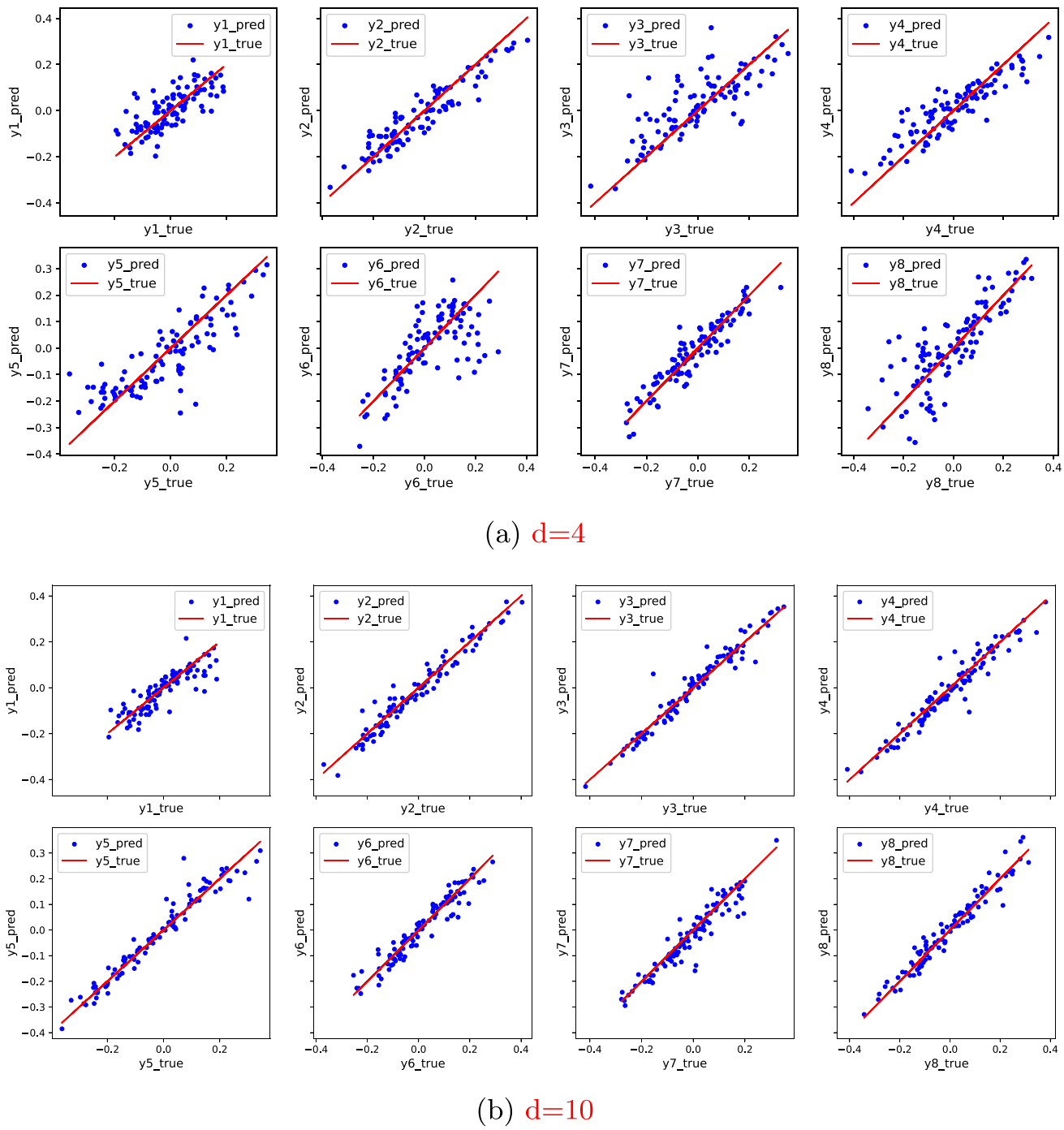

Fig. 4 Demonstration of the ability of PQC in our QSAM to simulate two different affine transformations by introducing APDM. y_1 to y_4 (the first row) represent the simulating results of the first affine transformation, while y_5 to y_8 (the second row) depict the simulating results of the second affine transformation. We observe that as the number of layers in the circuit increases, the blue circles gradually converge towards the red line

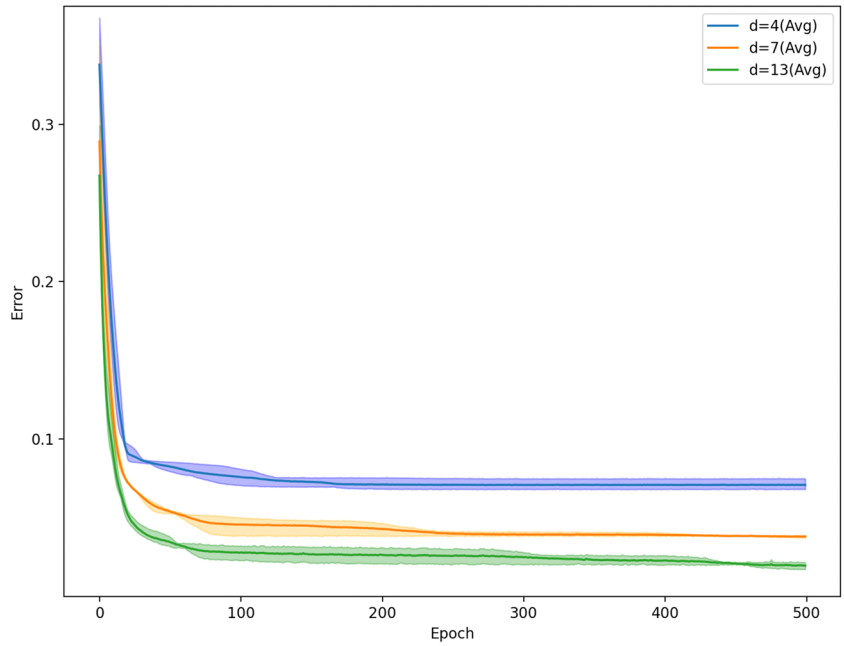

Fig. 5 Loss curves for Case 2. We have plotted the curves depicting the change in loss with respect to epochs for different depths of circuit, namely 4, 7, and 13. For each value of d, we have selected 5 sets of random affine transformations and averaged their results. The curves in the figure represent the averages, while the shaded areas represent the upper and lower deviations

achieves higher accuracy, which aligns with the characteristics of classical neural networks.

We compare the loss between the following two cases. Case 1: using three separate PQCs to simulate three affine transformations separately, which is trivial approach to quantumize the self-attention architecture. Case-2: using two PQCs to simulate three affine transformations with APDM method, which is similar to our approach. The results displayed in Table 2 indicate that the fitting accuracy of Case 2 is comparable to that of Case-1 with fewer parameters.

This indicates that the APDM method indeed achieves a comparable performance to the previous approach with fewer parameters, as demonstrated.

4.2 Experiments on NLP datasets

We apply our model to analyze the sentiment of reviews in three well-known NLP datasets: Yelp, IMDb, and Amazon. These datasets consist of reviews for restaurants, movies, and products, respectively. Each dataset contains millions of sequences, and we randomly choose 50,000 items from each dataset. Half of them are negative sentiment (labeled as '0') and the other half positive sentiment (labeled as '1'). Each sequence consists of several to dozens of words. We randomly assign 80% of the sequences as training data and the remaining 20% as test data.

To compare with the results of Ref. [26], the initialization method of parameters and the learning rate are both consistent with the approach mentioned in the citation. We repeat each experiment 9 times with different parameter initializations to collect the average accuracy and the corresponding fluctuations. The structural parameters of network are shown in Table 3. We also introduce the Classical Self-Attention Neural Network (CSANN) mentioned in Paper [26], as a classical baseline for comparison. It refers to embedding each token into a vector with 16-dimension, and then mapping it into three vectors, i.e., query, key and value, by using three affine transformations. The remaining structures are identical to the classical part of our method.

The results are displayed in Table 4. For simplicity, we refer to the model mentioned in Ref. [26] as QSANN, and our model as QSAM. Some remarks are as follows. Firstly, on

Table 2 Comparison between the two cases in terms of loss and the number of parameters

d	Loss		# Para	
	Case 1	Case 2	Case 1	Case 2
4	**0.0795**	0.0823	48	32
7	**0.0372**	0.0389	84	56
10	0.0276	**0.0272**	120	80
13	**0.0224**	0.0231	156	104
16	0.0198	**0.0196**	192	128

The lower loss in each row is indicated in bold font

Table 3 The hyper-parameters of the proposed QSANN in all experimental datasets

Dataset	L	N	d
Yelp	1	4	4
IMDb	1	4	4
Amazon	1	4	4
MNIST	3	9	7
Fashion MNIST	3	9	7

Table 4 Test accuracy of QSAM compared to CSANN and the QSANN on Yelp, IMDb, and Amazon datasets

Method	Yelp		IMDb		Amazon	
	# Paras	TestAcc(%)	# Paras	TestAcc(%)	# Paras	TestAcc(%)
CSANN [26]	785	83.11 ± 0.89	785	79.67 ± 0.83	785	83.22 ± 1.28
QSANN [26]	49	90.09 ± 1.29	49	87.28 ± 1.78	61	$\mathbf{87.25 \pm 1.75}$
QSAM	37	$\mathbf{91.03 \pm 0.94}$	37	$\mathbf{88.35 \pm 1.16}$	37	85.73 ± 1.81

The highest accuracy in each column is indicated in bold font

all three datasets, both quantum models perform better than the classical ones, demonstrating the advantages of quantum self-attention mechanism to some extent. Secondly, QSAM achieves slightly higher accuracies on two datasets compared to QSANN with fewer parameters. These results illustrate that the amplitude-phase decomposition measurement can extract information from the quantum-enhanced space more efficiently.

4.3 Experiments on CV datasets

Taking inspiration from the Vision-Transformer (ViT) proposed in Ref. [24], we apply our QSAM on image classification tasks. To handle 2D images, we reshape the image $\mathbf{x} \in \mathbb{R}^{H \times W \times C}$ into a sequence of flattened 2D patches $\mathbf{x}_p \in \mathbb{R}^{S \times (P^2 \cdot C)}$, where (H, W) is the resolution of the original image, C is the number of channels, (P, P) is the resolution of each image patch, and $S = HW/P^2$ is the resulting number of patches, which also serves as the effective input sequence length for the QSAM. In ViT, each patch is first mapped into a lower-dimensional vector before being fed into the self-attention layer. Here, in order to highlight the effect of quantum self-attention block, We directly use the original patches as input vectors.

We demonstrate the performance of our QSANN on the MNIST and Fashion MNIST datasets. MNIST contains 70,000 labeled images of handwritten digits ranging from 0 to 9. While Fashion MNIST dataset consists of 70,000 labeled images of various products from 10 different categories, including T-shirt/top, trousers, pullover and so on. The images in both datasets are grayscale and with dimensions of 28×28 pixels. We first resize each image from 28×28 to 27×27 then divide it into 81 patches with a patch size of 3×3 (P=3). This means that each input patch has a dimension of 9, so the number of qubits, N, is set to 9. The other two hyperparameters, L and d, are set to 3 and 7 respectively. On the MNIST dataset, we conduct three binary classification tasks (0 or 1, 1 or 8, odd or even) and one ten-class classification task (0 to 9). On the Fashion MNIST dataset, we perform binary classification between class 0 (T-shirt/top) and class 1 (trousers). To evaluate the performance of our QSANN, we compare it with three other quantum image classifiers: a tree tensor quantum network-based model (TTN) [30], and two QCNN models (QCNN-1 [13] and QCNN-2 [12]).

The results displayed in Table 5 are impressive. It is evident that our QSAM performs better than other quantum image classifiers in all classification tasks, indicating that our model is highly competent in image classification. The findings also indicate that the quantum self-attention algorithms may be more suitable for image tasks compared to the convolution mechanism. Due to the large dimension of images, existing quantum convolutional neural networks (QCNNs) need to use principal component analysis to compress the image into a lower-dimensional vector before feeding it into the quantum model. For instance, the TTN/MERA method [30] compresses the image into an 8-dimensional vector. However, QSAM allows for direct processing of pixel-level information in the image, resulting in significant reduction in computational cost.

5 Discussion

In this paper, we propose a quantum self-attention model based on amplitude-phase decomposition mechanism and

Table 5 Test accuracy of QSAM compared with TTN QCNN-1, QCNN-2 and LeNet (classical CNN) on MNIST and Fashion MNIST

Method	MNIST				Fashion-MNIST
	0 or 1	1 or 8	odd or even	0 to 9	0 or 1
TTN/MERA [30]	99.74 ± 0.02	——	84.85 ± 0.20	——	——
QCNN-1 [13]	98.50 ± 0.20	——	——	——	94.1 ± 1.10
QCNN-2 [12]	——	96.30	——	74.30	——
QSAM	$\mathbf{99.91 \pm 0.04}$	$\mathbf{99.56 \pm 0.07}$	$\mathbf{89.94 \pm 0.35}$	$\mathbf{82.22 \pm 0.41}$	$\mathbf{99.06 \pm 0.28}$

The highest accuracy in each column is indicated in bold font. Our method (QSAM) achieves the highest accuracies among all quantum algorithms
Note: The '–' indicates that there is no relative experimental data

demonstrate the excellent performance of the model on classification tasks. Compared to previous works, our model achieves competitive classification performance with fewer qubit resources, lower input-output complexity, and fewer parameters. Therefore, our model is a lightweight QSAM. There are several points worth discussing.

a) Whether QNNs have advantages over classical neural networks remains an open question to this day [31]. A point widely accepted within the community is that the high-dimensional Hilbert space spanned by quantum bits may exhibits a distinct representational capacity from classical spaces [32, 33]. This characteristic enables the learning of features that are challenging to uncover within classical spaces. Specifically, in our QSAM, the quantum-enhanced learning ability may lie in the fact that PQC inherently offers feature mappings that are more intricate than affine transformations, including product terms between elements within the input vectors, which is non-trivial in classical neural networks.

b) We originally propose APDM, a feature extracting approach that can map a quantum state to two different classical feature spaces. Therefore, we can extract feature information from the quantum-enhanced space more effectively, reducing the model's parameter count. This advantage makes our model more suitable for deployment on current NISQ-era quantum devices. And it has the potential to be generalized to other quantum neural network models as a general module for feature extraction from quantum state to classical data.

c) Scalability experiments are conducted to investigate whether our model, which maintains more concise ansatz configuration than that of Ref. [26], remains its advantage when handling more large-scale problems. The results show that with the growth of the problem scale, the testing accuracy of QSAM is higher than that of the benchmarks in most of scale-up cases. Meanwhile, our model's complexity did not need to increase compared to the previous work, yet it still maintains the advantage of having fewer parameters, showcasing the scalability of our model. Further details can be found in Appendix B.

d) The structure of the ansatz can still be further discussed. In this paper, the learnable parameters are set in single-qubit gates, and the entanglement of qubits is implemented by cycle connection. Alternatively, double-qubit parameter gates or other forms of quantum entanglement, such as fully connected schemes, could be explored [34]. Due to space limitations, this paper does not delve into these possibilities.

e) We didn't employ regularization term in the loss function. Because of the inherent limitations on the rotation angles of quantum gates, the values of individual parameters won't become excessively large. To some extent, it avoids the problem that the model complexity is too high to have good generalization ability. However, the lack of regularization term also restricts the model's adaptability, making it difficult to improve performance on smaller datasets. Setting appropriate regularization terms for QNNs is still an open and challenging problem, and it's also one of the directions we will focus on in future research.

Appendix A

In this section we compare the performance of our PQC with that of the PQC used in Ref. [26], the structure of the latter is depicted in Fig. 6.

Let D and K represent the number of repeated basic units of our PQC and previous PQC (see the Figs. 2 and 6), respectively. Let d represents the depth of one PQC, i.e., the number of the parameterized-gate layers in one PQC. We have d=3D+1 for our PQC and 2+K for the one in Ref. [26]. Hence, for a given d, we have K=3D-1 and D<K.

We make the comparison in two approaches. Firstly, we conduct numerical simulations to compare the abilities of these two PQCs to approximate classical affine

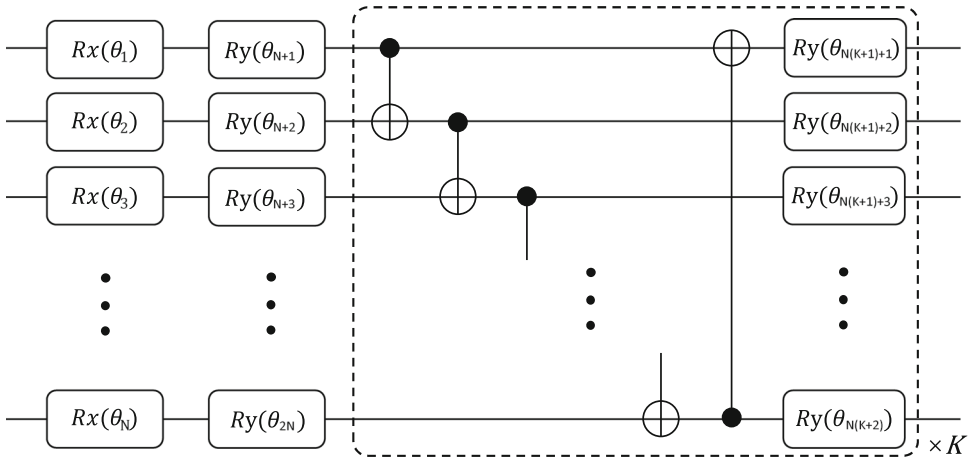

Fig. 6 The structure of PQC in Ref. [26]. The circuit block in the dashed box is repeated K times to enhance the expressibility

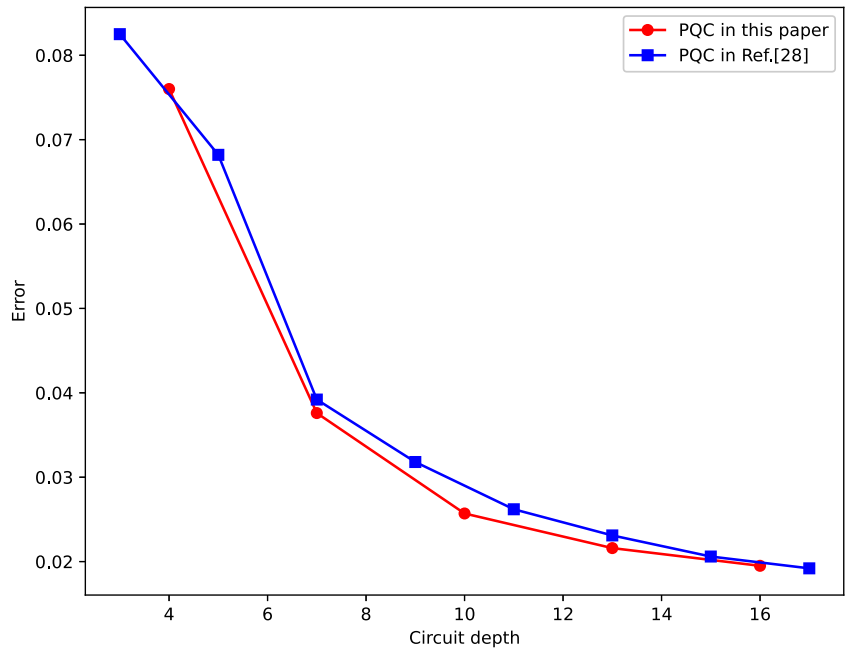

Fig. 7 The results of numerical simulations on PQC in QSANN [26] and PQC in QSAM

transformations by using the method described in Section 4.1. The results are depicted in Fig. 7. Secondly, we apply them to our QSAM model separately and compare their classification performances on three CV datasets: MNIST, CIFAR10 and Mini-ImageNet. For each dataset, we conduct binary, 4-class, and 10-class classification experiments, respectively. We set three sets of model depths: L=1 & d=4, L=1 & d=7, and L=4 & d=7, where L denotes the number of self-attention blocks, and d denotes the depth in each PQC. For each given dataset and each setting of L and d, we run experiments 5 times and calculate the average value of the classification accuracy as the final result. The other experimental details remain consistent with those outlined in Section 4.3. The results are shown in Table 6.

From Fig. 7, we observe that at the same circuit depth, the PQC in this paper achieves lower fitting errors, indicating its stronger expressibility. The results in Table 6 indicate that the performance of our PQC is better than that of the one in previous work in most cases. Additionally, from Figs. 2 and 6, the count of CNOT gates (i.e., #CNOT in Table 6) is ND and NK for the our and previous work's PQCs, respectively, where N is the number of qubits (here, N=9). Since D<K as explained before, we have ND<NK. In conclusion, our PQC is a better choice than the one in previous work.

Appendix B

This section is aimed to study how the QSAM performs as the scale of the problem increases. Focusing on classification problems in machine learning, we consider that the scale of problems may increase in three aspects: (i) dimensionality of individual samples, (ii) difficulty in feature recognition (the closer the features among categories, the greater the difficulty in recognition), and (iii) the number of predicted classes. In our experiments, MNIST, Cifar10, and Mini-ImageNet

Table 6 Test accuracy of the QSAM equipped separately with the PQC in Ref. [26] (marked as PQC-1) and the PQC in this paper (marked as PQC-2)

PQC	Depth	#CNOT	MNIST			Cifar10			Mini-ImageNet		
			2	4	10	2	4	10	2	4	10
PQC-1	L=1, d=4	18	99.58	93.55	68.22	83.90	58.63	31.14	79.50	48.50	32.55
	L=1, d=7	45	99.81	94.72	74.64	85.48	58.40	33.02	82.25	48.25	31.95
	L=3, d=7	135	99.87	**96.96**	81.43	87.16	58.35	**34.67**	86.00	50.50	33.65
PQC-2	L=1, d=4	9	99.32	93.29	70.76	84.28	59.47	30.33	80.00	47.50	33.20
	L=1, d=7	18	99.77	94.86	76.83	86.70	**60.67**	31.56	83.50	50.25	34.10
	L=3, d=7	54	**99.91**	96.45	**82.22**	**87.36**	60.54	31.13	**86.75**	**53.00**	**34.85**

L represents the number of QSABs (Quantum Self-Attention Blocks), and d represents the depth of PQC. When L and d are the same, both have the same parameter count. The highest accuracy in each column is indicated in bold font

Table 7 The selected datasets and scale of problem in the three aspects

Datasets	MNIST	CIFAR10	Mini-ImageNet
Individual sample size	28*28	32*32*3	84*84*3
Description of Categories	Handwritten digits from 0 to 9	Airplane, ship, bird, cat, dog, etc.	Different breeds of dogs
Number of predicted classes	2/4/10	2/4/10	2/4/10

datasets are selected to factor in these three aspects, as shown in Table 7 and explained below:

• The individual sample sizes of these three datasets are 28x28, 32x32x3, and 84x84x3, respectively, showcasing an increase in (i).

• For categories in datasets, MNIST contains 10 categories of digits from 0 to 9, and CIFAR10 consists of 10 different types of objects, such as airplanes, automobiles, cats, dogs, etc. Mini-ImageNet consists of 10 main categories, each main category containing 10 subcategories and each subcategory being finer breeds within one corresponding main category. In our experiment, we chose 10 subcategories within the 'Dog' main category as classification tasks, as the features among 10 breeds of dogs are closer and hence are more difficult in recognition than those between the main categories such as 'Dog' and 'Cat'. This demonstrates the scale-up in (ii).

• For each dataset, we conducted binary, 4-class, and 10-class prediction tasks, respectively, taking account of the growth scale in (iii).

We used CSANN and QSANN to benchmark our QSAM model, setting different model depths for comparison. For CSANN, there is no concept of layer depth, so we set its self-attention layer numbers as 1 and 3. For QSANN and QSAM, We set three sets of model depths: L=1 & d=4, L=1 & d=7, and L=4 & d=7, where L denotes the number of self-attention blocks, and d denotes the depth in each PQC. For each given dataset and each setting of L and d, we run experiments 5 times and calculate the average value of the classification accuracy as the final result. The other experimental details remain consistent with those outlined in Section 4.3.

The results are shown in Table 8. It can be seen that with the growth of the problem scale, the testing accuracy of QSAM is highest or very close to the highest among the three methods (see the bold font). Meanwhile, the complexity of our model didn't increase compared to the QSANN (as shown in Depth column), and it still maintains advantage of having fewer parameters (see the #Para column). The results of experiments demonstrate the scalability of our model. For example, in the case of binary classifications and depth with L=3 & d=7, across these three datasets, the test accuracy for QSANN is [99.89, 85.16, 85.00], while for QSAM, the accuracy is [99.91, 87.36, 86.75], surpassing that of QSANN and manifesting that our model demonstrates scalability in (i) and (ii). In the case of Mini-ImageNet and depth with L=3 & d=7, across binary, 4-class and 10-class classification tasks, the test accuracy for QSANN is [85.00, 48.50, 31.65], while for QSAM, the accuracy is [86.75, 53.00, 34.85], showing higher accuracy than QSANN and indicating that our model is scalable in (iii). Similar results can also be found in other cases.

In addition, we noticed that the performance of all models on multi-class classification tasks was not very satisfactory. This might be due to the inherent difficulty of the dataset, requiring additional insights to improve the classification accuracy.

Table 8 Test accuracy of QSAM compared to CSANN and the QSANN on MNIST, CIFAR10 and Mini-ImageNet datasets

Method	Depth	# Para	MNIST			Cifar10			Mini-ImageNet		
			2	4	10	2	4	10	2	4	10
CSANN	L=1	785	99.53	83.18	49.58	79.95	53.62	26.75	85.00	53.75	33.30
	L=3	2355	99.69	83.50	55.13	82.50	54.77	28.21	86.50	**54.50**	33.85
QSANN	L=1, d=4	109	99.56	87.78	68.73	80.87	51.04	29.26	81.50	46.50	30.25
	L=1, d=7	163	99.68	92.52	74.86	82.48	56.40	31.32	85.50	47.25	30.85
	L=3, d=7	415	99.89	95.96	79.43	85.16	58.45	**31.67**	85.00	48.50	31.65
QSAM	L=1, d=4	82	99.32	93.29	70.76	84.28	59.47	30.33	80.00	47.50	33.20
	L=1, d=7	136	99.77	94.86	76.83	86.70	**60.67**	31.56	83.50	50.25	34.10
	L=3, d=7	388	**99.91**	**96.45**	**82.22**	**87.36**	60.54	31.13	**86.75**	53.00	**34.85**

L represents the number of QSABs (Quantum Self-Attention Blocks), and d represents the number of layers in the PQC (Parameterized Quantum Circuit) containing parameterized gates. The highest accuracy in each column is indicated in bold font

Acknowledgements This work is supported by the Science and Technology Development Fund, Macau SAR (0093/2022/A2, 0076/2022/A2, and 0008/2022/AGJ) and the National Key Research and Development Program of China (2023YFB2703800).

Author Contributions Hui Zhang contributed to the conception and methodology of the study, performed the data analyses and wrote the manuscript. Qinglin Zhao is responsible for ensuring that the descriptions are accurate and agreed by all authors, and also contributed significantly to analysis and manuscript preparation. Chuangtao Chen performed the experiment and helped perform the analysis with constructive discussions.

Availability of data and materials The data underlying this article are available in the Kaggle.
https://www.kaggle.com/datasets/yelp-dataset/yelp-dataset
https://www.kaggle.com/datasets/ashirwadsangwan/imdb-dataset
https://www.kaggle.com/datasets/bittlingmayer/amazonreviews

Code Availability The code underlying this article are available from the corresponding author on reasonable request.

Declarations

Conflict of interest/Competing interests The authors have no relevant financial or non-financial interests to disclose.

Ethics approval Not applicable

Consent to participate Not applicable

Consent for publication Not applicable

References

1. Benedetti M, Lloyd E, Sack S, Fiorentini M (2019) Parameterized quantum circuits as machine learning models. Quantum Sci Technol 4(4):043001. https://doi.org/10.1088/2058-9565/ab4eb5
2. Bharti K, Cervera-Lierta A, Kyaw TH, Haug T, Alperin-Lea S, Anand A, Degroote M, Heimonen H, Kottmann JS, Menke T et al (2022) Noisy intermediate-scale quantum algorithms. Rev Mod Phys 94(1):015004. https://doi.org/10.1103/RevModPhys.94.015004
3. Shrapnel S, Costa F, Milburn G (2018) Quantum markovianity as a supervised learning task. Int J Quantum Inf 16(08):1840010. https://doi.org/10.1142/S0219749918400105
4. Zhang Y, Song D, Zhang P, Li X, Wang P (2019) A quantum-inspired sentiment representation model for twitter sentiment analysis. Appl Intell 49:3093–3108. https://doi.org/10.1007/s10489-019-01441-4
5. Konar D, Bhattacharyya S, Dey S, Panigrahi BK (2022) Optimized activation for quantum-inspired self-supervised neural network based fully automated brain lesion segmentation. Appl Intell 52(13):15643–15672. https://doi.org/10.1007/s10489-021-03108-5
6. Havlíček V, Córcoles AD, Temme K, Harrow AW, Kandala A, Chow JM (2019) Gambetta JM (2019) Supervised learning with quantum-enhanced feature spaces. Nature 567(7747):209–212. https://doi.org/10.1038/s41586-019-0980-2
7. Ding C, Bao T-Y, Huang H-L (2021) Quantum-inspired support vector machine. IEEE Trans Neural Netw Learn Syst 33(12):7210–7222. https://doi.org/10.1109/TNNLS.2021.3084467
8. Lloyd S, Mohseni M, Rebentrost P (2013) Quantum algorithms for supervised and unsupervised machine learning. arXiv preprint arXiv:1307.0411. https://doi.org/10.48550/arXiv.1307.0411
9. Dey A, Bhattacharyya S, Dey S, Platos J, Snasel V (2022) Automatic clustering of colour images using quantum inspired meta-heuristic algorithms. Appl Intell, 1–23. https://doi.org/10.1007/s10489-022-03806-8
10. Bausch J (2018) Classifying data using near-term quantum devices. Int J Quantum Inf 16(08):1840001. https://doi.org/10.1142/s0219749918400014
11. Henderson M, Shakya S, Pradhan S, Cook T (2020) Quanvolutional neural networks: powering image recognition with quantum circuits. Quantum Mach Intell 2(1):2. https://doi.org/10.1007/s42484-020-00012-y
12. Wei S, Chen Y, Zhou Z, Long G (2022) A quantum convolutional neural network on nisq devices. AAPPS Bull 32:1–11. https://doi.org/10.1007/s43673-021-00030-3
13. Hur T, Kim L, Park DK (2022) Quantum convolutional neural network for classical data classification. Quantum Mach Intell 4(1):3. https://doi.org/10.1007/s42484-021-00061-x
14. Jing Y, Li X, Yang Y, Wu C, Fu W, Hu W, Li Y, Xu H (2022) Rgb image classification with quantum convolutional ansatz. Quantum Inf Process 21(3):101. https://doi.org/10.1007/s11128-022-03442-8
15. Cong I, Choi S, Lukin MD (2019) Quantum convolutional neural networks. Nat Phys 15(12):1273–1278. https://doi.org/10.1038/s41567-019-0648-8
16. Bausch J (2020) Recurrent quantum neural networks. Adv Neural Inf Process Syst 33:1368–1379
17. Chen SY-C, Yoo S, Fang Y-LL (2022) Quantum long short-term memory. In: ICASSP 2022-2022 IEEE International conference on acoustics, speech and signal processing (ICASSP). IEEE, pp 8622–8626. https://doi.org/10.1109/ICASSP43922.2022.9747369
18. Lloyd S, Weedbrook C (2018) Quantum generative adversarial learning. Phys Rev Lett 121(4):040502. https://doi.org/10.1103/PhysRevLett.121.040502
19. Situ H, He Z, Wang Y, Li L, Zheng S (2020) Quantum generative adversarial network for generating discrete distribution. Inf Sci 538:193–208. https://doi.org/10.1016/S0020025520305545
20. Huang H-L, Du Y, Gong M, Zhao Y, Wu Y, Wang C, Li S, Liang F, Lin J, Xu Y et al (2021) Experimental quantum generative adversarial networks for image generation. Phys Rev Appl 16(2):024051. https://doi.org/10.1103/PhysRevApplied.16.024051
21. Mitarai K, Negoro M, Kitagawa M, Fujii K (2018) Quantum circuit learning. Phys Rev A 98(3):032309. https://doi.org/10.1103/PhysRevA.98.032309
22. Cerezo M, Arrasmith A, Babbush R, Benjamin SC, Endo S, Fujii K, McClean JR, Mitarai K, Yuan X, Cincio L et al (2021) Variational quantum algorithms. Nat Rev Phys 3(9):625–644
23. Vaswani A, Shazeer N, Parmar N, Uszkoreit J, Jones L, Gomez AN, Kaiser L, Polosukhin I (2017) Attention is all you need. Adv Neural Inf Process Syst 30
24. Dosovitskiy A, Beyer L, Kolesnikov A, Weissenborn D, Zhai X, Unterthiner T, Dehghani M, Minderer M, Heigold G, Gelly S et al (2020) An image is worth 16x16 words: transformers for image recognition at scale. arXiv preprint arXiv:2010.11929. https://doi.org/10.48550/arXiv.2010.11929
25. Di Sipio R, Huang J-H, Chen SY-C, Mangini S, Worring M (2022) The dawn of quantum natural language processing. In: ICASSP 2022-2022 IEEE International conference on acoustics, speech and signal processing (ICASSP). IEEE, pp 8612–8616. https://doi.org/10.1109/ICASSP43922.2022.9747675

26. Li G, Zhao X, Wang X (2022) Quantum self-attention neural networks for text classification. arXiv preprint arXiv:2205.05625. https://doi.org/10.48550/arXiv.2205.05625
27. Nielsen MA, Chuang I (2002) Quantum computation and quantum information. American Association of Physics Teachers. https://doi.org/10.1119/1.1463744
28. Zhao R-x, Shi J, Zhang S (2022) Qsan: a near-term achievable quantum selfattention network. arXiv preprint arXiv:2207.07563. https://doi.org/10.48550/arXiv.2207.07563
29. Schuld M, Bocharov A, Svore KM, Wiebe N (2020) Circuit-centric quantum classifiers. Phys Rev A 101(3):032308. https://doi.org/10.1103/PhysRevA.101.032308
30. Grant E, Benedetti M, Cao S, Hallam A, Lockhart J, Stojevic V, Green AG, Severini S (2018) Hierarchical quantum classifiers. npj Quantum Inf 4(1):65. https://doi.org/10.1038/s41534-018-0116-9
31. Cerezo M, Verdon G, Huang H-Y, Cincio L, Coles PJ (2022) Challenges and opportunities in quantum machine learning. Nat Comput Sci 2(9):567–576. https://doi.org/10.1038/s43588-022-00311-3
32. Liu Y, Arunachalam S, Temme K (2021) A rigorous and robust quantum speed-up in supervised machine learning. Nat Phys 17(9):1013–1017. https://doi.org/10.1038/s41567-021-01287-z
33. Abbas A, Sutter D, Zoufal C, Lucchi A, Figalli A, Woerner S (2021) The power of quantum neural networks. Nat Comput Sci 1(6):403–409. https://doi.org/10.1038/s43588-021-00084-1
34. Sim S, Johnson PD, Aspuru-Guzik A (2019) Expressibility and entangling capability of parameterized quantum circuits for hybrid quantum-classical algorithms. Adv Quantum Technol 2(12):1900070. https://doi.org/10.1002/qute.201900070

Publisher's Note Springer Nature remains neutral with regard to jurisdictional claims in published maps and institutional affiliations.

Springer Nature or its licensor (e.g. a society or other partner) holds exclusive rights to this article under a publishing agreement with the author(s) or other rightsholder(s); author self-archiving of the accepted manuscript version of this article is solely governed by the terms of such publishing agreement and applicable law.

Hui Zhang received his B.S. from Huazhong University of Science and Technology in 2009 and his master's degree from Chongqing University in 2014. Currently, he is pursuing a Ph.D. degree at Macau University of Science and Technology, specializing in deep learning and quantum machine learning.

Qinglin Zhao received his Ph.D. degree from the Institute of Computing Technology, the Chinese Academy of Sciences, Beijing, China, in 2005. From May 2005 to August 2009, he worked as a postdoctoral researcher at the Chinese University of Hong Kong and the Hong Kong University of Science and Technology. Since September 2009, he has been with the School of Computer Science and Engineering at Macau University of Science and Technology and now he is a professor. His research interests include blockchain and decentralization computing, machine learning and its applications, Internet of Things, wireless communications and networking, cloud/fog computing, and quantum computing and quantum machine learning. He serves as an associate editor of IEEE Transactions on Mobile Computing and IET Communications.

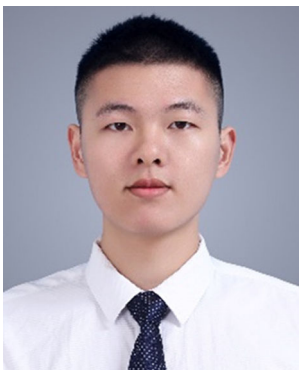

Chuangtao Chen received his B.S. from Shaoguan University in 2019 and his master's degree from Foshan University in 2022. Currently, he is pursuing a Ph.D. degree at Macau University of Science and Technology, specializing in quantum machine learning.