A TOUCH OF INDIA

GRADUATION PROJECT 26

INSPIRED FROM INDIA, HANDMADE IN INDIA, DESIGNED FOR YOUR HOME

COLLECTION | DECOR

Design a contemporary home décor collection inspired by Indian architecture. The aim is to transform architectural elements such as arches, domes, and jaali patterns into aesthetically appealing and functional products for modern interiors while promoting Indian handicrafts and supporting artisan communities.

TERRACOTTA

Terracotta, a traditional form of earthenware, has been an integral part of Indian culture for centuries. Known for its warm earthy tones and rustic appeal, it reflects the simplicity and authenticity of handmade craft. Widely used in home décor and utility products, terracotta combines functionality with aesthetic value.

The process of creating terracotta involves shaping natural clay into desired forms, followed by drying and firing it in a kiln at high temperatures.

This strengthens the material and enhances its durability. One of its distinctive features is its porous nature, which gives it a unique texture and finish. Artisans often experiment with natural pigments and surface treatments to achieve a variety of colors and patterns.

Terracotta not only represents sustainability through the use of natural materials but also preserves traditional craftsmanship passed down through generations.

- Preparation of raw material
- Hand shaping / Wheel throwing
- Use of moulds and tools
- Drying and finishing
- Firing in kiln
- Surface treatment
- Quality check

PREPARATION OF RAW MATERIAL

To ensure the durability of any design, it is crucial to properly prepare the raw materials. In this factor, an important step in the preparation process involves mixing the black soil with the local soil and then passing it through a fine sieve to de-air the clay and restore and add moisture to it.

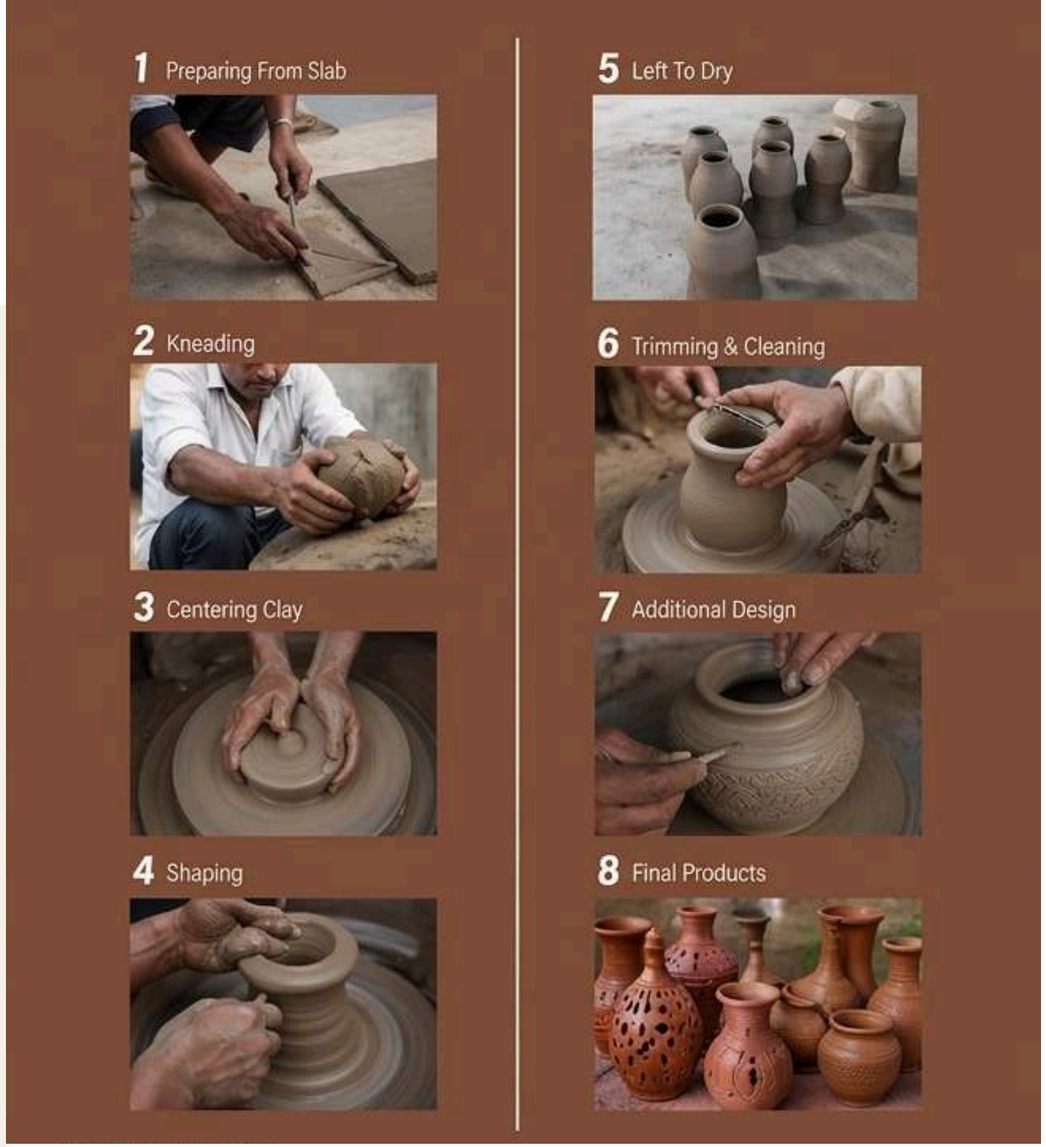

POTTERY WHEEL

A pottery wheel is a useful tool for creating symmetrical designs with clay. The clay used in this process should be pliable but not too wet, and the potter shapes it using their hands while the wheel is moving. The speed and pressure applied to the clay determine the shape and size of the pot, making it an environment-friendly and timeless tool.

USING MOULDS AND JIGS

As the company focuses on mass production, relying solely on hand-thrown pottery is not practical. Therefore, plaster moulds, jiggers, or tools are used, which form the clay repeatedly either in a jigger or individually, making the process more efficient. The clay used in molding is firmer than the clay used for wheel or jig throwing.

FIRING

Traditional terracotta firing in India is a time-honored process that involves baking clay objects in a kiln fueled by wood or other organic materials at high temperatures. This firing process, crucial for enhancing the durability and color of terracotta, takes place in a closed environment where the final form is achieved. The cooling process is also vital to prevent cracking or warping due to sudden changes in temperature. This tradition in terracotta firing requires a great deal of skill and experience to produce beautiful and durable pieces of art.

INSPIRATION BOARD

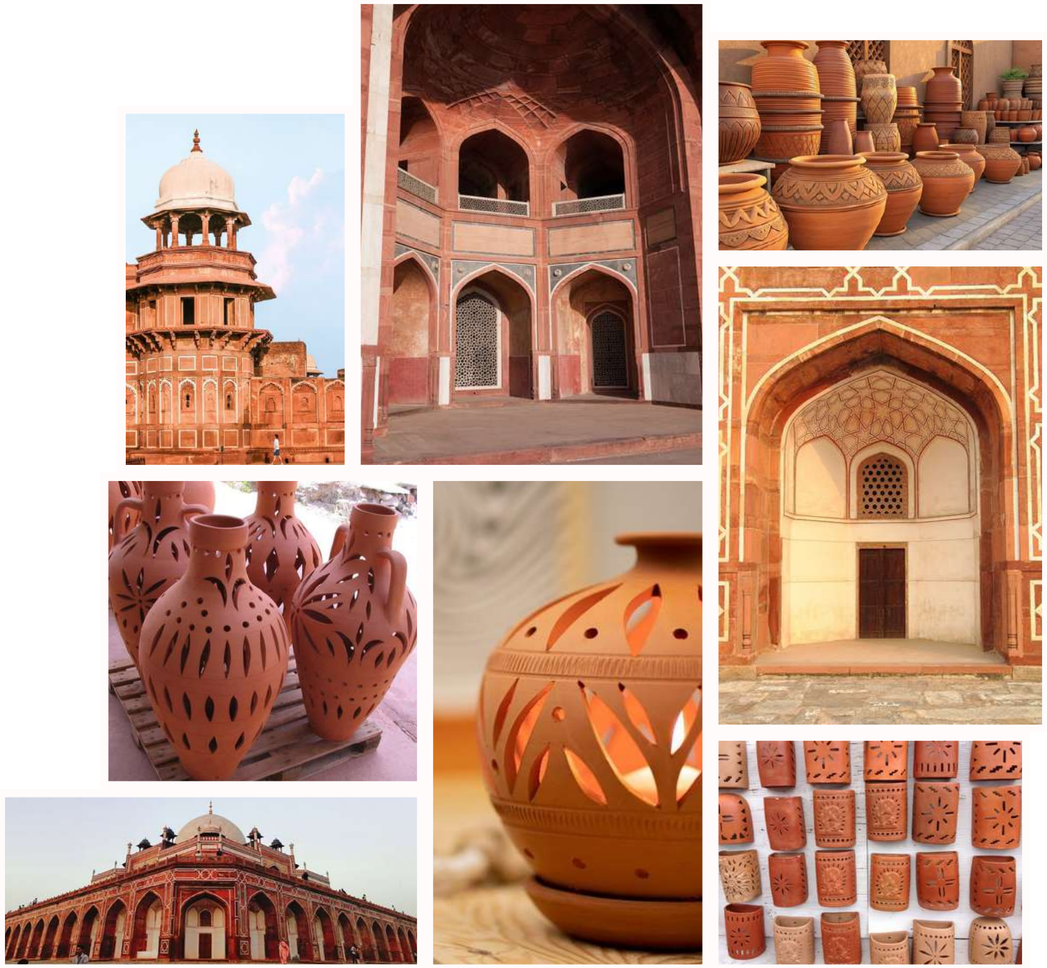

MOOD BOARD

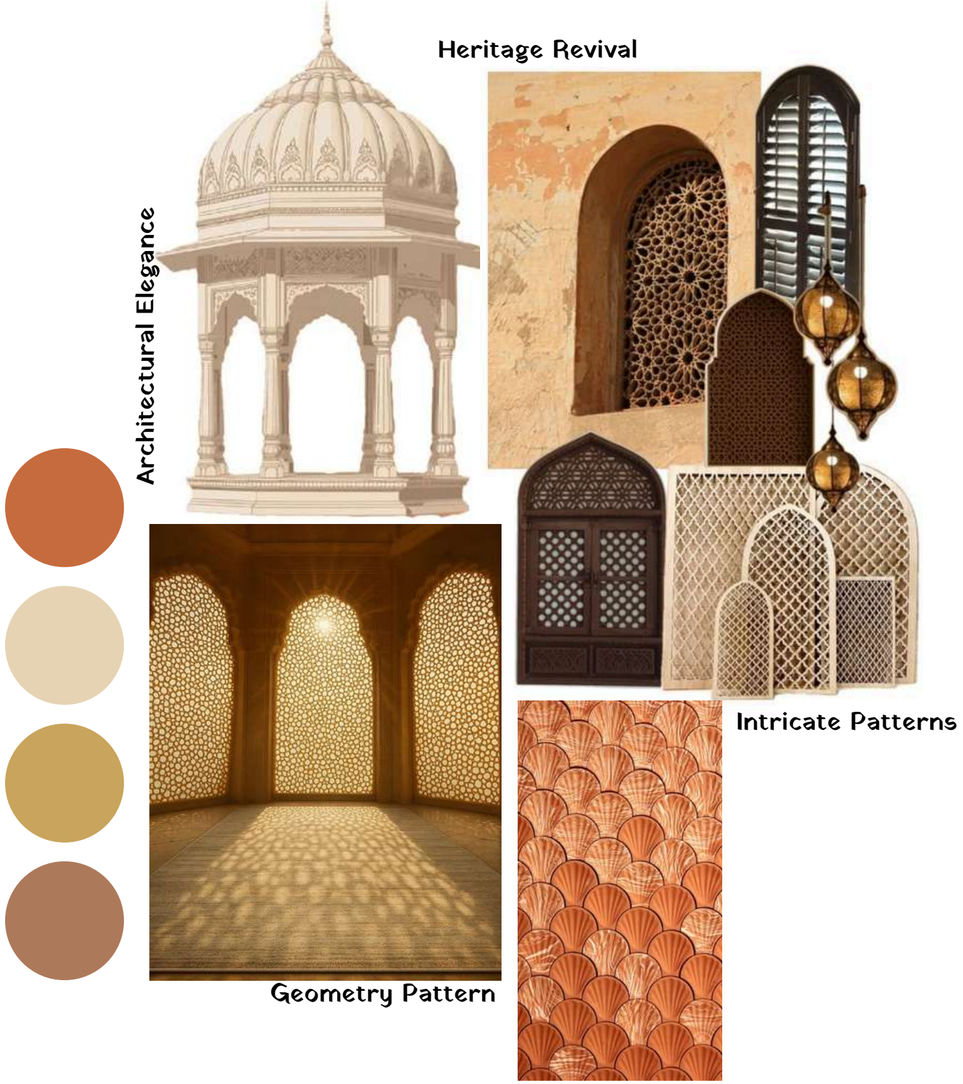

DEVELOPING FORMS

CONCEPTULIZATION

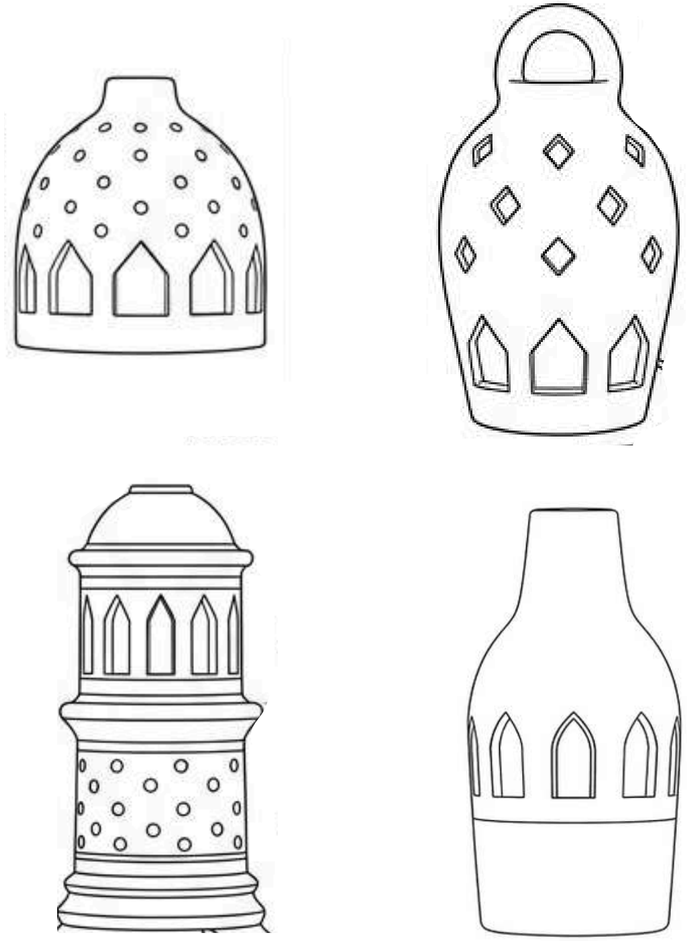

TECHNICAL DRAWINGS

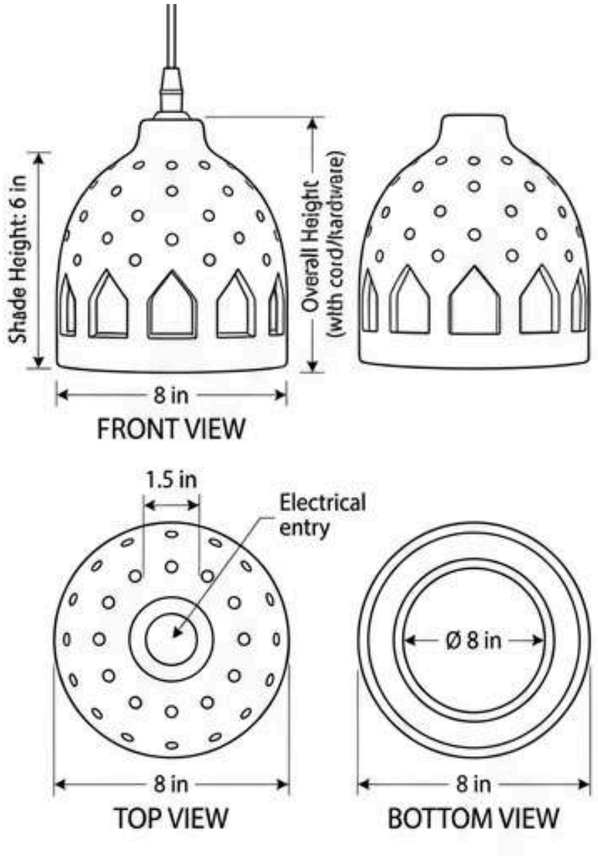

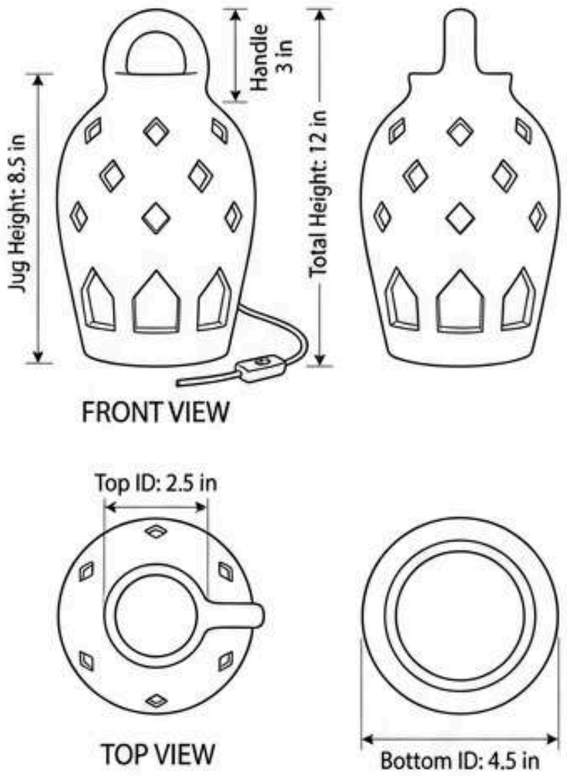

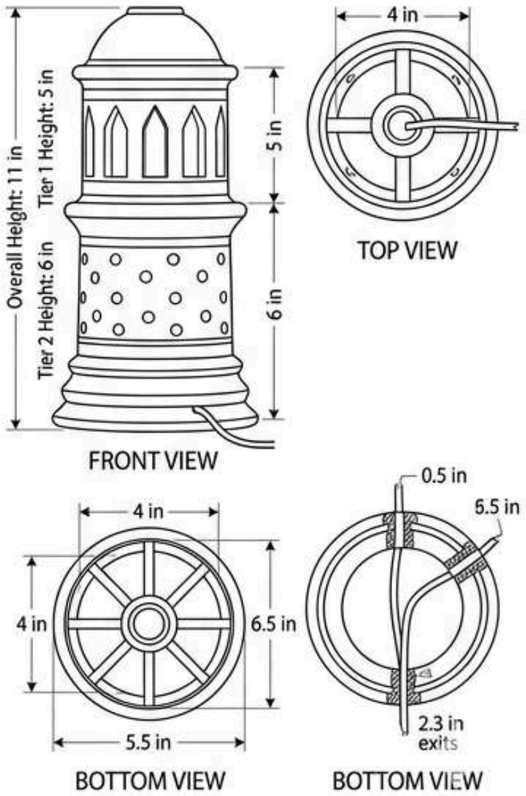

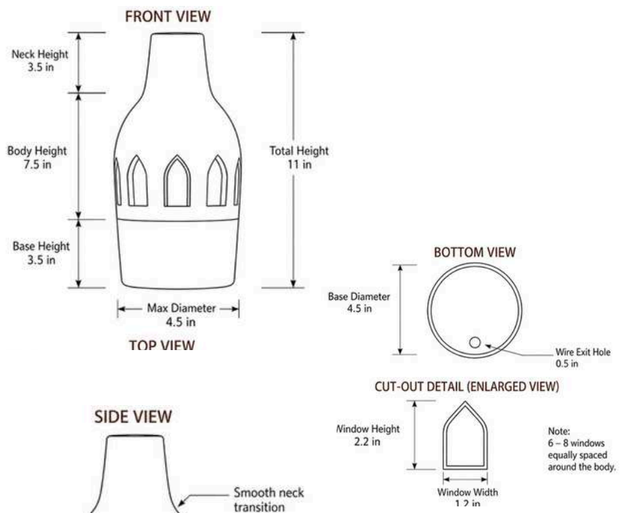

MAKING PROCESS
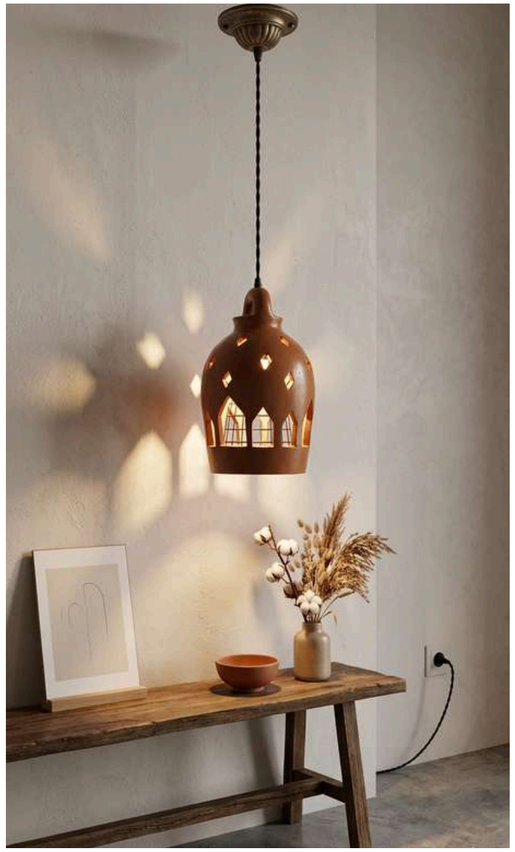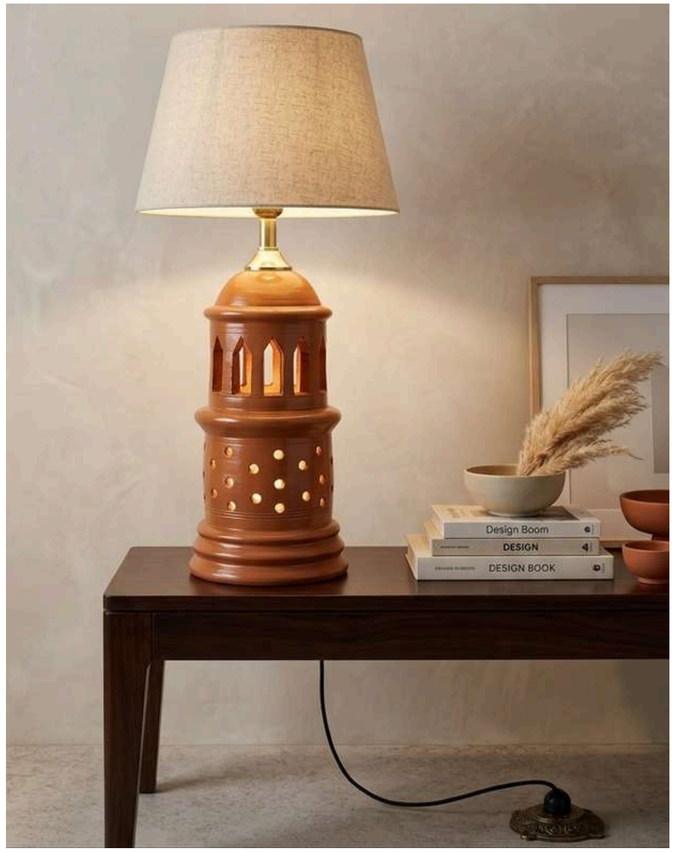
FINAL PRODUCT SHOOT