Input Voltage

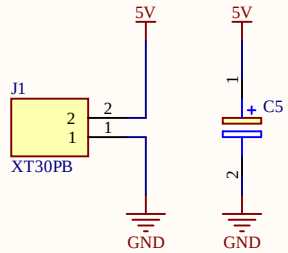

Sep Down voltage regulator

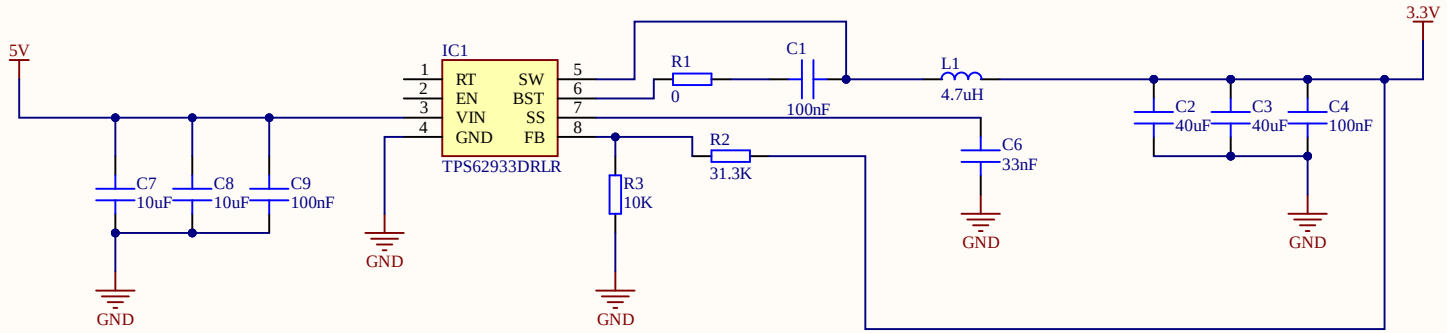

Input Voltage

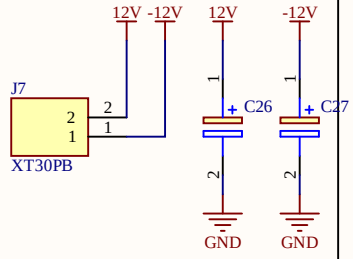

Input Voltage

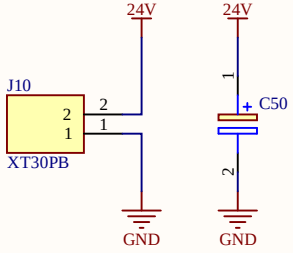

Output Voltage

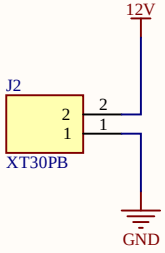

Title		
Size A4	Number	Revision
Date: 11.02.2025		Sheet of
File: C:\ALTIUM_PROJECTS\..\PowerSupply.SchDoc		Drawn By:

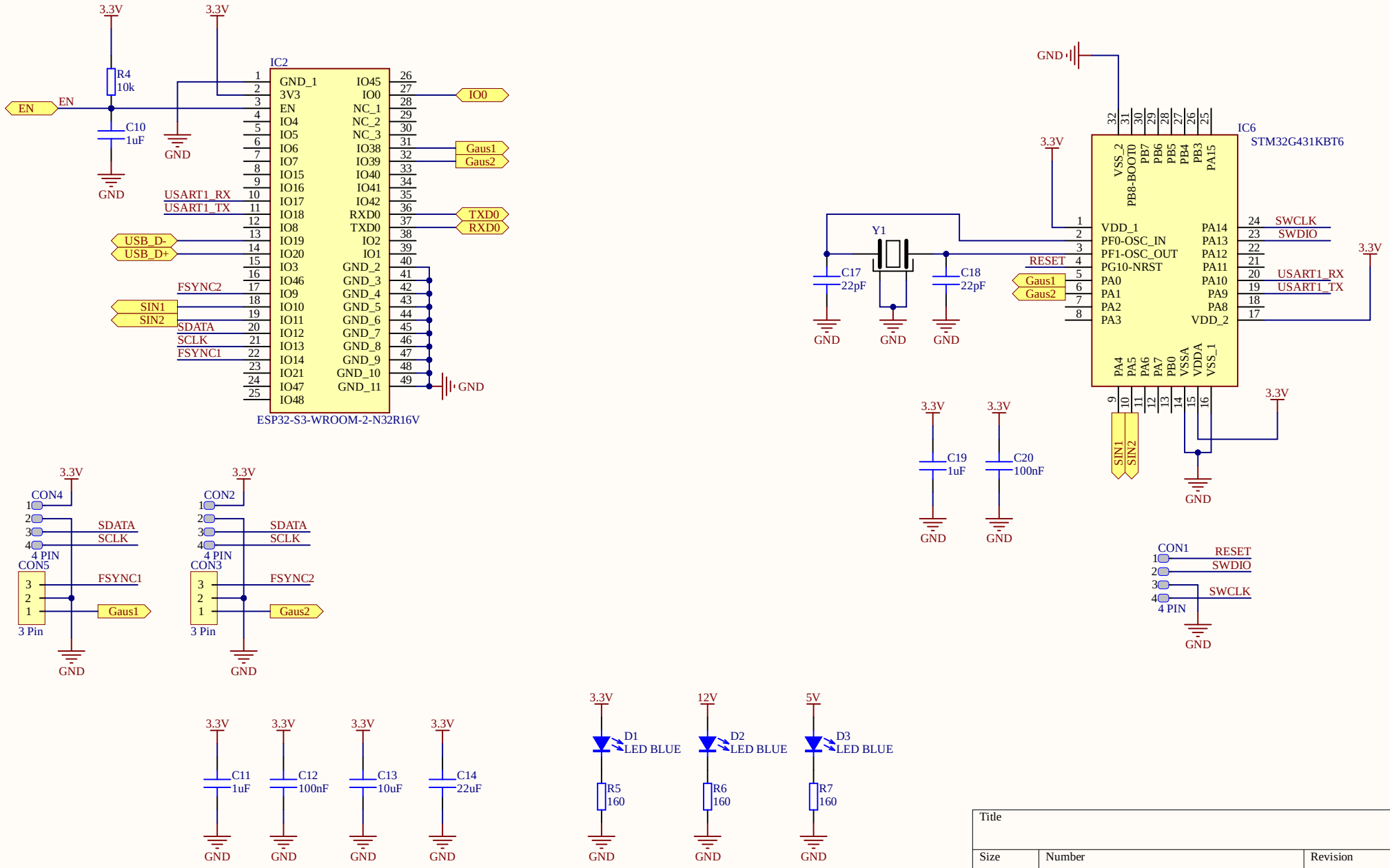
3.3V
R4
10k
EN
C10
1uF
GND
IC2
GND_1
3V3
EN
IO4
IO5
IO6
IO7
IO15
IO16
IO17
IO18
IO8
IO19
IO20
IO3
IO46
IO9
IO10
IO11
IO12
IO13
IO14
IO21
IO47
IO48
IO45
IO0
NC_1
NC_2
NC_3
IO38
IO39
IO40
IO41
IO42
RXD0
TXD0
IO2
IO1
GND_2
GND_3
GND_4
GND_5
GND_6
GND_7
GND_8
GND_9
GND_10
GND_11
IO0
Gaus1
Gaus2
TXD0
RXD0
USART1_RX
USART1_TX
USB_D-
USB_D+
FSYNC2
SIN1
SIN2
SDATA
SCLK
FSYNC1
ESP32-S3-WROOM-2-N32R16V
GND
IC6
STM32G431KBT6
VSS_2
PB8-BOOT0
PB7
PB6
PB5
PB4
PB3
PA15
VDD_1
PF0-OSC_IN
PF1-OSC_OUT
PG10-NRST
PA0
PA1
PA2
PA3
PA14
PA13
PA12
PA11
PA10
PA9
PA8
VDD_2
PA4
PA5
PA6
PA7
PB0
VSSA
VDDA
VSS_1
SWCLK
SWDIO
RESET
Y1
C17
22pF
C18
22pF
C19
1uF
C20
100nF
CON4
CON5
CON2
CON3
4 PIN
3 Pin
CON1
C11
1uF
C12
100nF
C13
10uF
C14
22uF
D1
LED BLUE
D2
LED BLUE
D3
LED BLUE
R5
160
R6
160
R7
160
12V
5V
Title
Size
A4
Number
Revision
Date:
11.02.2025
Sheet of
File:
C:\ALTIUM_PROJECTS\..\MCU.SchDoc
Drawn By:

USBC connector

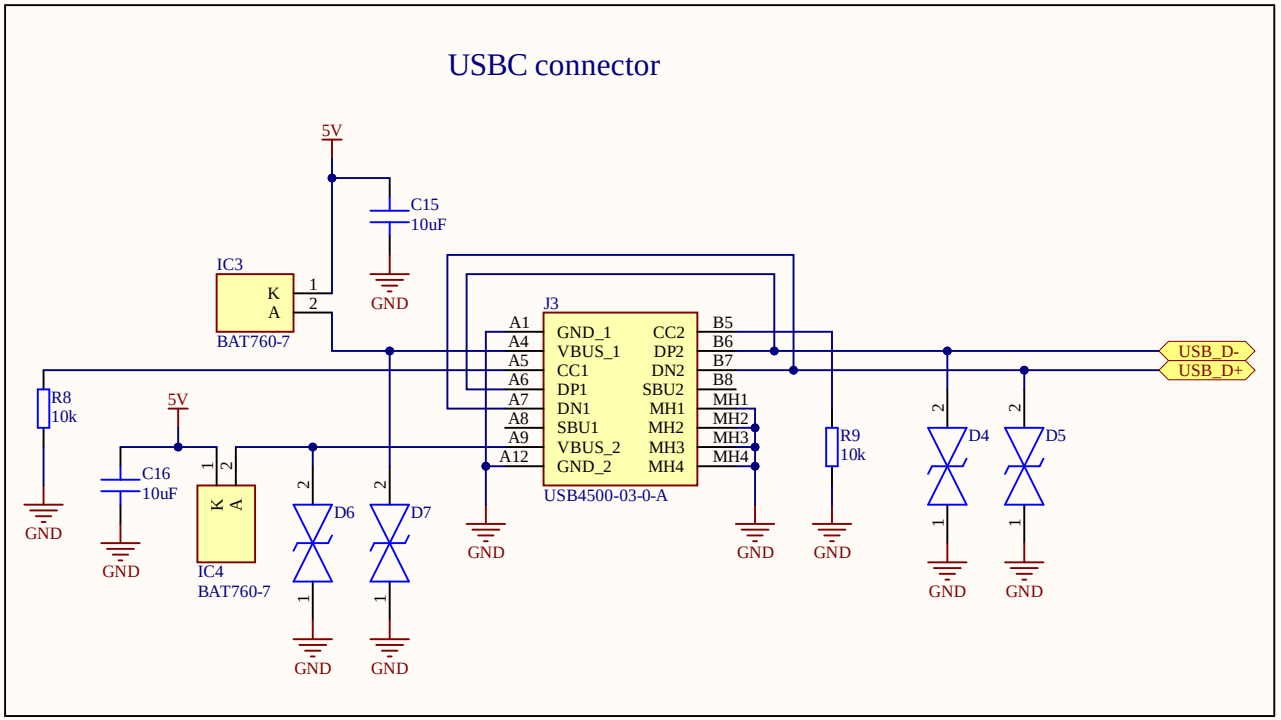

UART connector

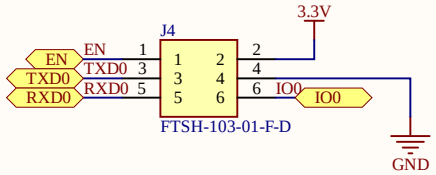

Title		
Size: A4	Number	Revision
Date: 11.02.2025	Sheet of	
File: C:\ALTIUM_PROJECTS\..\Interface.SchDoc	Drawn By:	

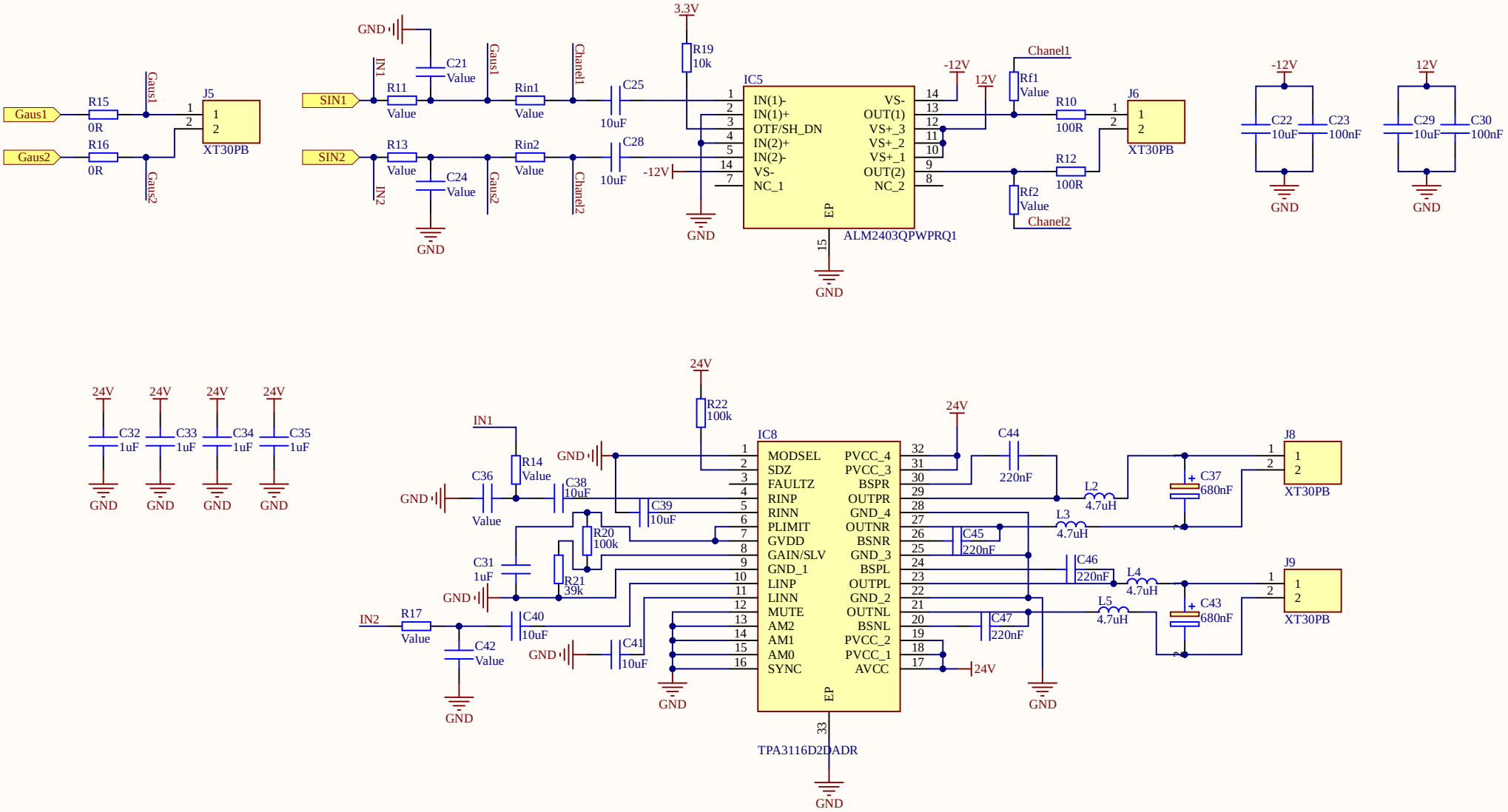

Title		
Size A4	Number	Revision
Date: 11.02.2025	Sheet of	
File: C:\ALTIUM_PROJECTS\..\Amplifiers.SchDoc	Drawn By:	

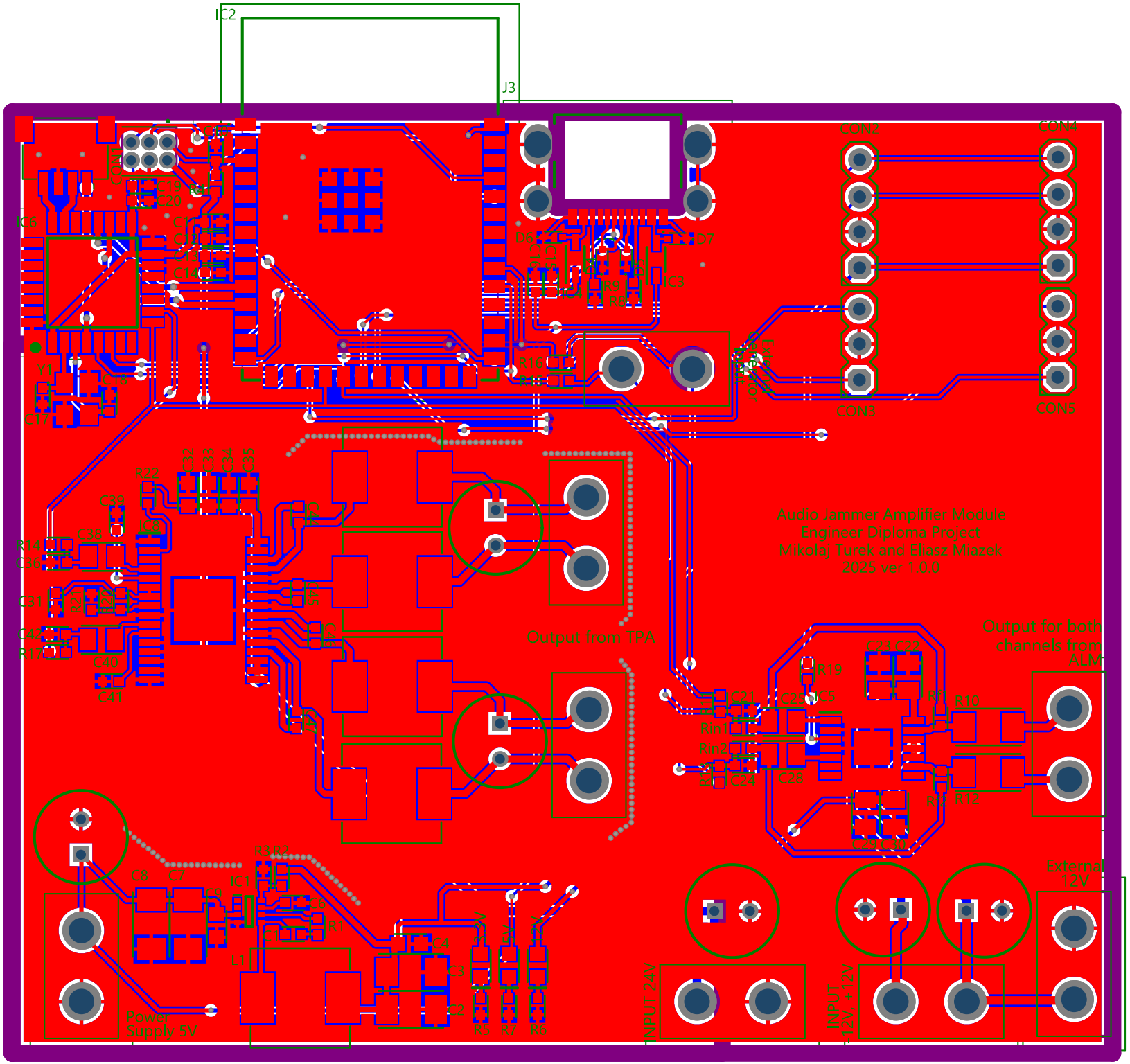
IC2
J3
CON2
CON4
CON3
CON5
Audio Jammer Amplifier Module
Engineer Diploma Project
Mikołaj Turek and Eliasz Miazek
2025 ver 1.0.0
Output from TPA
Output for both
channels from
ALM
External
12V
Power
Supply 5V
INPUT 24V
INPUT
12V +12V

Comment	Description	Designator	Footprint	LibRef	Quantity
100nF	MLCC Capacitor	C1, C12, C20	C 0402	Capacitor	3
40uF	MLCC Capacitor	C2, C3	C 1206	Capacitor	2
100nF	MLCC Capacitor	C4, C9	C 0603	Capacitor	2
UVY1V101MED1TD	Capacitor Polarised	C5, C26, C27, C50	CAPPRD250W50D655H1250	UVY1V101MED1TD	4
33nF	MLCC Capacitor	C6	C 0402	Capacitor	1
10uF	MLCC Capacitor	C7, C8	C 1206	Capacitor	2
1uF	MLCC Capacitor	C10, C11, C19, C31	C 0402	Capacitor	4
10uF	MLCC Capacitor	C13, C15, C16, C39, C41	C 0402	Capacitor	5
22uF	MLCC Capacitor	C14	C 0402	Capacitor	1
22pF	MLCC Capacitor	C17, C18	C 0402	Capacitor	2
Value	MLCC Capacitor	C21, C24, C36, C42	C 0402	Capacitor	4
10uF	MLCC Capacitor	C22, C25, C28, C29, C38, C40	C 0805	Capacitor	6
100nF	MLCC Capacitor	C23, C30	C 0805	Capacitor	2
1uF	MLCC Capacitor	C32, C33, C34, C35	C 0603	Capacitor	4
680nF	Capacitor Polarised	C37, C43	CAPPRD250W50D655H1250	UVY1V101MED1TD	2
220nF	MLCC Capacitor	C44, C45, C46, C47	C 0402	Capacitor	4
4 PIN		CON1	SM04B-SRSS-TB	4 PIN	1
4 PIN		CON2, CON4	Goldpin 2.54 4P	4 PIN	2
3 Pin		CON3, CON5	Goldpin 2.54 3P	3 Pin	2
LED BLUE		D1, D2, D3	LED 0603 BLUE	LED BLUE	3
LESD5D5.0CT1G	TVS Diode (Bi-directional)	D4, D5, D6, D7	LESD5D50CT1G	LESD5D5.0CT1G	4
TPS62933DRLR	Integrated Circuit	IC1	SOTFL50P160X60-8N	TPS62933DRLR	1
ESP32-S3-WROOM-2-N32R16V	Integrated Circuit	IC2	ESP32S3WROOM2N32R16V	ESP32-S3-WROOM-2-N32R16V	1
BAT760-7	Integrated Circuit	IC3, IC4	SOD2513X120N	BAT760-7	2
ALM2403QPWPRQ1	Integrated Circuit	IC5	SOP65P640X120-15N	ALM2403QPWPRQ1	1
STM32G431KBT6	Integrated Circuit	IC6	QFP80P900X900X160-32N	STM32G431KBT6	1
TPA3116D2DADR	Integrated Circuit	IC8	SOP65P810X120-33N	TPA3116D2DADR	1
XT30PB	Connector	J1, J2, J5, J6, J7, J8, J9, J10	XT30PB	XT30PB	8
USB4500-03-0-A	Connector	J3	USB4500030A	USB4500-03-0-A	1
FTSH-103-01-F-D	Connector	J4	FTSH-103-XX-YYY-D	FTSH-103-01-F-D	1
4.7uH	General pourpouse inductor	L1, L2, L3, L4, L5	HPI0630	Inductor	5
0	General pourpouse resistor	R1	R 0402	Resistor	1
31.3K	General pourpouse resistor	R2	R 0402	Resistor	1
10K	General pourpouse resistor	R3, R4, R8, R9, R19	R 0402	Resistor	5
160	General pourpouse resistor	R5, R6, R7	R 0402	Resistor	3
100R	General pourpouse resistor	R10, R12	R 1206	Resistor	2
Value	General pourpouse resistor	R11, R13, R14, R17, Rf1, Rf2, Rin1, Rin2	R 0402	Resistor	8
0R	General pourpouse resistor	R15, R16	R 0402	Resistor	2
100k	General pourpouse resistor	R20, R22	R 0402	Resistor	2
39k	General pourpouse resistor	R21	R 0402	Resistor	1
MCSJK-7U-16.00-12-30-80-B-30	Crystal or Oscillator	Y1	MCSJK7U1600123080B30	MCSJK-7U-16.00-12-30-80-B-30	1